NACHI

# Ball & Roller Bearings

NACHi

# Ball & Roller Bearings

NACHi

# Contents


| | |
|---|---|
| Information | 1 |
| Deep-groove Ball Bearings | 139 |
| Angular Contact Ball Bearings | 165 |
| Self-aligning Ball Bearings | 191 |
| Cylindrical Roller Bearings | 201 |
| Tapered Roller Bearings | 229 |
| Four-row Tapered Roller Bearings | 295 |
| Spherical Roller Bearings | 301 |
| Thrust Ball Bearings | 331 |
| Spherical Roller Thrust Bearings | 357 |
| Precision Machine Tool Bearings | 367 |
| Bearings for Rolling Stock | 387 |
| Sheave Bearings | 399 |
| Ball Bearing Units | 407 |
| Plummer Block Housings | 539 |
| Mounting Accessories | 591 |
| Appendix Table | 643 |

NACHi

# Information


**1. Types and Features of Rolling Contact Bearings** 1

1.1 Classification and Types of Rolling Contact Bearings 1
1.2 Rolling Contact Bearing Designs and Features 4

**2. Selection of Rolling Contact Bearings** 9

2.1 Bearing Type Selection Considerations 10

**3. Load Capacity and Life of Rolling Contact Bearings** 15

3.1 Basic Dynamic Load Rating and Rating Life 15
3.2 Basic Rating Life Calculation Guide 18
3.3 Rating Life and Operating Temperature 22
3.4 Calculation of Bearing Load 25
3.5 Dynamic Equivalent Load 29
3.6 Basic Static Load Rating and Static Equivalent Load 33
3.7 Axial Load Capacity of Cylindrical Roller Bearings 34

**4. Boundary Dimensions and Bearing Numbers of Rolling Contact Bearings** 35

4.1 Boundary Dimensions of Rolling Contact Bearings 35
4.2 Boundary Dimensions of Radial Bearings (Except Tapered Roller Bearings) 37
4.3 Boundary Dimensions of Tapered Roller Bearings 41
4.4 Boundary Dimensions of Thrust Bearings with Flat Back Face 43
4.5 Dimensions of Snap Ring Grooves and Snap Rings 45
4.6 Rolling Contact Bearing Numbers 49

**5. Accuracy of Rolling Contact Bearings** 52

5.1 Tolerance Values for Radial Bearings (Except Tapered Roller Bearings) 53
5.2 Tolerance Values for Metric Tapered Roller Bearings 57
5.3 Tolerance Values for Thrust Ball Bearings 59
5.4 Tolerance Values of Spherical Roller Thrust Bearings (Class 0) 59
5.5 Tolerance Values of Tapered Roller Bearings - Inch Series 60
5.6 Chamfer Dimension Limits 61
5.7 Tolerances for Tapered Bores 63

**6. Internal Clearance of Rolling Contact Bearings** 64

**7. Materials for Rolling Contact Bearings** 69

7.1 Bearing Ring and Rolling Elements 69
7.2 Cage Material 69

**8. Application of Rolling Contact Bearings** 71

8.1 Fits and Clearance 71
8.2 Preload and Rigidity 95
8.3 Shaft and Housing Selection 99
8.4 Sealing Devices 106
8.5 Lubrication 111
8.6 Speed Limit 122
8.7 Friction and Temperature Rise 124
8.8 Mounting and Dismounting 125

**9. Trouble-shooting Bearing Problems** 133

NACHi

# Dimensions


**Deep-groove Ball Bearings** 139

Deep-groove Ball Bearings 143

Deep-groove Ball Bearings
With snap ring groove / With snap ring / Shield type with snap ring 157

**Angular Contact Ball Bearings** 165

Angular Contact Ball Bearings Single Mounting / Duplex Mounting 169

Double-row Angular Contact Ball Bearings 185

**Self-aligning Ball Bearings** 191

Self-aligning Ball Bearings 195

**Cylindrical Roller Bearings** 201

Cylindrical Roller Bearings 205

Double-row Cylindrical Roller Bearings 225

**Tapered Roller Bearings** 229

Tapered Roller Bearings Metric Series 231

Tapered Roller Bearings Inch Series 251

Double-row Tapered Roller Bearings - Outward 279

Double-row Tapered Roller Bearings - Inward 291

**Four-row Tapered Roller Bearings** 295

Four-row Tapered Roller Bearings Metric Series 297

Four-row Tapered Roller Bearings Inch Series 299

**Spherical Roller Bearings** 301

Spherical Roller Bearings 305

**Thrust Ball Bearings** 331

Single-direction Thrust Ball Bearings 335

Single-direction Thrust Ball Bearings Inch Series 347

Extra Small and Miniature Thrust Ball Bearings TAM Type 349

Extra Small and Miniature Thrust Ball Bearings TG Type (Banded) 350

Double-direction Thrust Ball Bearings 351

**Spherical Roller Thrust Bearings** 357

Spherical Roller Thrust Bearings 359

**Precision Machine Tool Bearings** 367

High-speed Angular Contact Ball Bearings BNH000 Series 369

Double-direction Thrust Angular Contact Ball Bearings TAD20 Series 373

Combination Angular Contact Ball Bearings TAH10 Series 375

Combination Angular Contact Ball Bearings TBH10 Series 376

Ball Screw Support Bearings TAB Series 381

Cross Tapered Roller Bearings 385

**Bearings for Rolling Stock** 387

Journal Bearings for Railway Rolling Stock 389

Bearings for Pinion 395

Bearings for Gearwheel 396

Ball Bearings for Traction Motor 397

Cylindrical Roller Bearings for Traction Motor 398

**Sheave Bearings** 399

Sheave Bearings 401

**Ball Bearing Units** 407

**Plummer Block Housings** 539

**Mounting Accessories** 591

**Appendix Table** 643

inch — mm Conversion Table 644

kgf — N Conversion Table 645

kg — lb Conversion Table 646

°C — °F Conversion Table 647

Hardness Conversion Table 648

Tolerance of Shaft 649

Tolerance of Housing Bore 651

International Units SI Conversion Table 653

SI Prefixes 654

Lubricating Greases 655

# 1. Types and Features of Rolling Contact Bearings

## 1.1 Classification and Types of Rolling Contact Bearings

In general, rolling contact bearings may be classified as radial or thrust bearings according to bearing design or they may be classified as ball or roller bearings according to the type of rolling element.
Radial bearings are mainly designed for supporting a load perpendicular to a shaft axis, whereas thrust bearings accept loads parallel to the shaft axis.
Using the BALL and ROLLER classification ROLLER bearings may be further divided according to the shape of the roller into the sub-classes; Cylindrical roller, Tapered roller, Spherical roller, or Needle roller bearings. BALL bearings can be further divided according to the number of rows into either single-row or double-row (for Thrust Ball bearings, single-direction and double-direction.) BALL Bearing may be still further sub-divided into smaller segments according to the relationship between the bearing rings and rolling elements; the shape of bearing rings; and use of accessories.
Bearings are also classified by specific application, such as wheel bearings for automotive applications.

**Table 1.1 Classification and Types of Rolling Contact Bearings**

■Radial Bearings

| Ball Bearings | | | | | |
|---|---|---|---|---|---|
| Bearing Types | | | Cross Sections | Bearing Series Symbols JIS | Bearing Series Symbols Others |
| Deep Groove Ball Bearings | Single row | Without filling slot (JIS B 1521) | | 67<br>68<br>69<br>60<br>62<br>63 | 00B60<br>RLS<br>RMS<br>16000 |
| | | Without filling slot (for unit; JIS B 1558) | | UC<br>UWE<br>UNE<br>UM<br>UK | U<br>B<br>KH |
| | | With filling slot | | — | |
| | Double row | Without filling slot | | — | |
| | | With filling slot | | — | 42<br>43 |
| Counter-Bored Bearings | Single row | Non-Separable | | — | |
| | | Separable (JIS B 1538) | | E<br>EN | BM |
| Angular Contact Ball Bearings | Single row | Non-Separable (JIS B 1522) | | 79<br>70<br>72<br>73 | |
| | | Separable | | — | |
| | Double row | Without filling slot | | — | 52<br>53 |
| | | With filling slot | | — | 32<br>33 |
| | Duplex mounting | DB mounting<br>DF mounting<br>DT mounting | | — | |
| Self-Aligning Ball Bearings | Double row | Outer ring raceway: spherical (JIS B 1523) | | 12<br>13<br>22<br>23 | |

| Roller Bearings | | | | | | |
|---|---|---|---|---|---|---|
| Bearing Types | | | | | Cross Sections | Bearing Series Symbols JIS | Bearing Series Symbols Others |
| Cylindrical Roller Bearings | Single row | Inner ring with a rib | Without loose rib | Outer ring with ribs on both sides (JIS B1533) | | NJ2<br>NJ22<br>NJ3<br>NJ23<br>NJ4 | |
| | | | With loose rib | | | NH2<br>NH22<br>NH3<br>NH23<br>NH4 | |
| | | | Inner ring without rib | | | NU10<br>NU2<br>NU22<br>NU3<br>NU23<br>NU4 | |
| | | Inner ring with ribs on both sides | | Outer ring with a rib (JIS B1533) | | NF2<br>NF3<br>NF4 | |
| | | | | Outer ring without rib (JIS B1533) | | N2<br>N3<br>N4 | N10 |
| | Double row | Inner ring with ribs on both sides | | Outer ring without rib (JIS B1533) | | NN30 | |
| | | Inner ring without ribs on both sides | | Outer ring with ribs on both sides (JIS B1533) | | NNU49 | |
| Needle Roller Bearings | Single row | Inner ring without rib | | Outer ring with ribs on both sides (JIS B1536) | | NA48<br>NA49 | |
| | | Without inner ring | | | | RNA48<br>RNA49 | |
| Tapered Roller Bearings | Single row | Separable (JIS B1534) | | | | 320<br>302<br>322<br>303<br>303D<br>323 | 329<br>331 330<br>313 332 |
| | Double row | Separable (Inward) | | | | — | KBD |
| | | Separable (Outward) | | | | — | KBE<br>KDE |
| Spherical Roller Bearings | Four row | Separable | | | | — | |
| | Single row | Outer ring raceway: spherical | | | | — | |
| | Double row | Outer ring raceway: spherical (JIS B1535) | | | | 239 222<br>230 232<br>240 213<br>231 223<br>241 | |

■Thrust Bearings

| Ball Bearings | | | | | |
|---|---|---|---|---|---|
| Bearing Types | | | Cross Sections | Bearing Series Symbols JIS | Bearing Series Symbols Others |
| Thrust Ball Bearings | Single direction | Flat back face (JIS B 1532) | | 511<br>512<br>513<br>514 | 29<br>9<br>39<br>0 |
| | | Flat back face | | — | TMN |
| | | Flat back face | | — | TG |
| | | Spherical back face | | — | 532(U)<br>533(U)<br>534(U)<br>7(U)<br>37(U)<br>00T6(U) |
| | Double direction | Flat back face (JIS B 1532) | | 522<br>523<br>524 | 19 |
| | | Spherical back face | | — | 542(U)<br>543(U)<br>544(U) |
| Thrust Angular Contact Ball Bearings | Single direction | Non-Separable (DB, DF DT, Others) | | — | TAB |
| | Double direction | Separable | | — | TAD |

| Roller Bearings | | | | | |
|---|---|---|---|---|---|
| Bearing Types | | | Cross Sections | Bearing Series Symbols JIS | Bearing Series Symbols Others |
| Thrust Cylindrical Roller Bearings | Single direction | Flat back face | | — | TMP |
| Thrust Tapered Roller Bearings | | Flat back face | | — | |
| Spherical Roller Thrust Bearings | Single direction | Outer ring raceway: spherical (JIS B 1539) | | 292<br>293<br>294 | |

■Bearings for Specific Application

| Bearing Types | Cross Sections | Bearing Series Symbols JIS | Bearing Series Symbols Others |
|---|---|---|---|
| Journal Bearings for Rolling Stocks | | — | FCD<br>JC<br>AP |
| | | — | JT |
| Sheave Bearings | | — | E50<br>RB48<br>RC48 |

**Table 1.2 Type and Features of Rolling Contact Bearings**

| Bearing Type \ Features | Load carrying capacity | High speed rotation | Accuracy | Low noise·Low torque | Permissible aligning of inner ring·outer ring | Rigidity | Aligning action | Separable inner ring·outer ring | Applicable to "fix side" | Applicable to "free side" | Inner ring with tapered bore | Reference pages |
|---|---|---|---|---|---|---|---|---|---|---|---|---|
| Deep Groove Ball Bearings | ↑ — — | ●●●● | ●●● | ●●● | ●● | ● | | | ○ | □ | ○ | 139 |
| Angular Contact Ball Bearings | ← ↑ | ●●●● | ●●● | ●●● | ● | ● | | | | | | 165 |
| Double row Angular Contact Ball Bearings | ← ↑ → | ●●● | ● | ● | ● | ● | | | ○ | □ | | 185 |
| Duplex Mounting Angular Contact Ball Bearings | ← ↑ → | ●●● | ●●● | ●● | ● | ●● | | | ○ | □ | | 169 |
| Self-Aligning Ball Bearings | ↑ — — | ●● | ● | ● | ●●● | ● | ○ | | | □ | ○ | 191 |
| Cylindrical Roller Bearings | ↑ | ●●● | ●●● | ●● | ● | ● | | ○ | | ○ | ○ | 201 |
| Double row Cylindrical Roller Bearings | ↑ | ●●● | ●●● | ●● | ● | ●●● | | ○ | | ○ | ○ | 225 |
| Cylindrical Roller Bearings With One Rib Inner Ring | ↑ — → | ●●● | ●● | ●● | ● | ●● | | ○ | | | | 201 |
| Cylindrical Roller Bearings With L-shaped Thrust Collar | ↑ — → | ●●● | ●● | ●● | ● | ●● | | ○ | ○ | | | 201 |
| Needle Roller Bearings | ↑ | ●●● | ● | ● | ● | ●● | | ○ | | ○ | | — |
| Tapered Roller Bearings | ← ↑ | ●● | ●●● | ● | ● | ●● | | ○ | | | | 229 |
| Double-row Multi-row Tapered Roller Bearings | ← ↑ → | ●● | ● | ● | ● | ●●●● | | ○ | ○ | □ | | 229<br>295 |
| Spherical Roller Bearings | ↑ — — | ●● | ● | ● | ●●● | ●●● | ○ | | ○ | □ | ○ | 357 |
| Single Direction Thrust Ball Bearings | ← | ● | ●● | ●● | × | ● | | ○ | | | | 331 |
| Single Direction Thrust Ball Bearings with Spherical back face | ← | ● | ● | ●● | ●●● | ● | ○ | ○ | | | | 331 |
| Double-direction Thrust Angular Contact Ball Bearings | ← → | ●●● | ●●● | ●● | × | ●● | | ○ | | | | 371 |
| Thrust Cylindrical Roller Bearings | ← | ● | ● | ● | × | ●●● | | ○ | | | | — |
| Thrust Tapered Roller Bearings | ← | ● | ● | ● | × | ●●● | | ○ | | | | — |
| Spherical Roller Thrust Bearings | ← | ● | ● | ● | ●●● | ●●● | ○ | ○ | | | | 357 |
| Reference pages | 10<br>15 | 9<br>122 | 52 | 10<br>123 | 10 | 10<br>95 | 10 | 10 | 10 | 10 | 10<br>102 | — |

Remarks: 1. ↑ and ← → show radial load and axial load respectively ← and ← → mean single direction and double directions respectively.
2. Mark "●" shows possibility for getting the characteristics. More number of "●" means much easier than less number. "X" mean "not applicable".
3. "○" means "applicable". "□" means "can be applicable", but shaft thermal expansion must be absorbed.
4. Thrust Ball/Roller Bearings can sustain axial loads ONLY.
5. This table is for reference only. Bearings should be selected for specific applications.





## 1.2 Rolling Contact Bearing Designs and Features

Rolling Contact Bearings usually consist of an inner ring, outer ring, and rolling elements (balls or rollers), and a cage which positions the rolling elements at fixed intervals between the ring raceways. (See Figure 1).

Standard materials for inner and outer rings, and for the rolling elements, are high carbon chromium bearing steel or case hardening steel. The steel is heat-treated to an appropriate hardness to attain optimum resistance to rolling fatigue. Bearing surfaces are ground to a very high accuracy using special machine tools.

While each of the various types of rolling contact bearings has special features, the following features are common to most rolling contact bearing types:

- Rolling contact bearings have relatively low starting resistance. There is little difference between the starting and running resistance of rolling contact bearings.
- Dimensions and accuracy are standardized. Ready-made products of high quality are easy to obtain.
- Compared to "sliding" bearings, rolling contact bearings are less prone to wear and help to maintain the accuracy of the machine in which they are used.
- Rolling contact bearings consume small amounts of lubricant and are far less costly to maintain than sliding-type bearings.

To get optimum performance from a selected bearing, it is necessary to understand the design and features of the various bearing types and to then select bearings optimal to individual machine performance.

### 1.2.1 Deep Groove Ball Bearings

Deep Groove ball bearings are the most popular of all the ball bearing types because they are available in a wide variety of seal, shield and snap-ring arrangements.

The bearing ring grooves are circular arcs made slightly larger than the radius of the ball. The balls make point contact with the raceways (elliptical contact when loaded). The inner ring shoulders are of equal height (as the outer ring shoulders).

Deep Groove ball bearings can sustain radial, axial, or composite loads and because of simple design, this bearing type can be produced to provide both high-running accuracy and high-speed operation.

Deep Groove ball bearings having an outside diameter less than 9 mm are known as Miniature ball bearings. Deep Groove ball bearings having an outside diameter ≧ 9 mm and a bore diameter < 10 mm are known as Extra-small ball bearings.

Standard ball retainers (cages) are made from pressed steel. Machined cages are used in bearings operating at very high speeds or for large diameter bearings.

Deep groove ball bearings with seals or shields

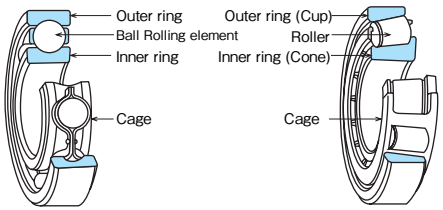


**Fig 1. Rolling Contact Bearing Designs**

are standardized. They contain proper amount of grease in advance.

### 1.2.2 Single-row Angular Contact Ball Bearings

The raceways of both the inner and outer rings of this bearing type are made with a set contact angle. These bearings are non-separable. Since the balls are inserted utilizing counter-bore construction, a larger number of balls can be installed than in the case of Deep-groove ball bearings.

Standard cage materials may be pressed steel, high-strength brass, or synthetic resin. Cage material is dependent on the bearing series and or service condition.

Single-row Angular Contact ball bearings can sustain radial, axial or composite loads, however, any axial load must be in one direction.

This bearing type is generally used in pairs to handle the induced load resulting from the internal axial force generated by the applied radial load. When mounting two single bearings in adjacent positions, NACHI provides these combination parts (pairs) with preadjusted clearance. Paired combination bearings are matched sets. Combination or paired bearings can be arranged BACK-TO-BACK (DB), FACE-TO-FACE (DF), or in TANDEM (DT). DB or DF sets can sustain bidirectional axial loads.

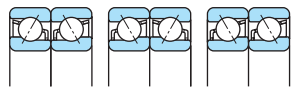

DB (Back-to-back) DF (Face-to-face) DT (Tandem)

### 1.2.3 Double-row Angular Contact Ball Bearings

The construction of this ball bearing type is similar to the adjacent, BACK-TO-BACK mounting of two Single-row Angular Contact ball bearings. Because fewer balls can be inserted per row compared to Single-row Angular Contact ball bearings, a Double-row Angular Contact ball bearing will have less load capacity than an equivalent size/series BACK-TO-BACK set of two Single-row Angular Contact ball bearings.

This type bearing can sustain radial, moment and bi-directional axial loads.

### 1.2.4 Self-aligning Ball Bearings

This type is constructed with the inner ring and ball assembly contained within an outer ring which has a spherical raceway. Due to the construction, this bearing type will tolerate a small angular misalignment from deflection or mounting error.

Self-aligning Ball bearings are suitable for long

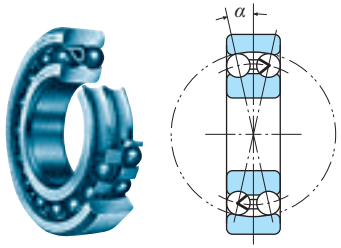






shafts where accurate positioning of housing bores is difficult. This type is often used in conjunction with pillow blocks. Cages are made from pressed steel or polyamide resin.

This bearing should only be used in light axial load applications due to the small axial support of the rolling elements by the outer ring raceway.

### 1.2.5 Cylindrical Roller Bearings

Construction of this roller bearing type is the simplest of all radial roller bearings. This bearing type is often used in high-speed applications.

Because the inner ring, outer ring, and rollers are in line contact, this bearing type has a large radial load capacity. Various Cylindrical roller bearing configurations are:

N,NJ,NF,NU,RNU : integral ribs (flanges)
NH,NP,NUP,NUH : integral and loose ribs
NN,NNU : double-row bearings

(See the Cylindrical roller bearing dimensional data section for description of configuration design).

Configurations having integral flanges or loose ribs on both the inner and outer rings can sustain a small amount of axial load. Since this bearing type supports axial loads as sliding action between the end of the rollers and flange faces, axial loading is limited.

Double-row Cylindrical roller bearings are used for high-speed, high-accuracy applications such as; main spindle support for lathes, milling machines, and machining centers.

Radial clearance of tapered-bore bearings can be adjusted during mounting of the bearing(s) onto the mating shaft.

Standard cages are pressed steel or polyamide resin. Machined cages of high-strength brass are used for bearings of large dimension or for high-speed applications.

### 1.2.6 Tapered Roller Bearings

The inner and outer ring raceways and rollers of this type of bearing are made with a taper so that the planes of the surfaces of the raceways and roller axis meet at a point. The rollers are guided by the cone (inner ring) back-face rib.

A single-row Tapered roller bearing can support a combined radial and axial load. If either a radial load or bi-directional axial load is to be carried, a pair of bearings must be used in a “face-to-face” or “back-to-back” position.

Tapered roller bearings are separable into the components: outer ring, inner ring and roller assembly. The non-separable inner ring and roller assembly is called the “cone”, and the outer ring is called the “cup”. Internal clearance is established during mounting by the axial positioning of the cone relative to the cup.

This bearing type can be used in a preload situation to obtain higher rigidity and better running accuracy of the shaft.

Double-row and four-row Tapered roller bearings are designed to carry radial, and bi-directional axial loads. Four-row Tapered roller bearings are used for the roll necks of rolling

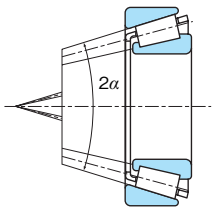

machines and for other applications where heavy or impact loads are present.
Multi-row Tapered roller bearings have the serial number and the combination symbol stamped on the faces of the rings for clearance adjustment and must be assembled according to this number and symbol.
Pressed steel cages are used for small bore bearings and machined, high-strength brass or mild-steel cages are used for bearings with larger bores. Heavy-duty pin-type cages are used for some large-bore bearings.

## 1.2.7 Spherical Roller Bearings

NACHI double-row Spherical roller bearings are available in bore sizes from 25 mm to over 1000 mm.
The raceways in the outer ring of this type bearing are designed with a spherical surface whose center coincides with the bearing center.
NACHI Spherical roller bearings are of an improved design having a modified line contact between the raceways and rollers. This construction enables very high radial and impact-load capacity.
This bearing type can carry a moderately-high level of bi-directional axial load and is self-aligning. This type is used extensively for large machines where shaft deflection or mounting error may occur.
Spherical roller bearings are used for paper mill equipment, rolling machines, rolling stock, shaker screens and general industrial machinery. The mounting and dismounting of Spherical roller bearings is facilitated through the use of tapered-bore bearings in conjunction with tapered shaft, or adapters or withdrawal sleeves. Internal clearance can also be precisely set using a tapered-bore bearing.
Pressed steel cages are used for small-bore bearings and machined, high-strength brass cages are used for bearings with larger bores.

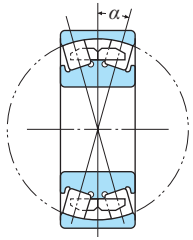


## 1.2.8 Thrust Ball Bearings

Thrust ball bearings can handle axial loads only. Bearing rings mounted on the shaft are called shaft washers, and those mounted in the bearing housing are called housing washers. Both washers contain grooves for the balls.
Thrust Ball bearings are of two types: single type which can support axial loads in only one direction and double type that can support bi-directional loads. The central washer of double type thrust ball bearing is located in an axial direction by a shaft shoulder and sleeve.
Thrust Ball bearings are not suitable for high-speed rotation since lubricant is expelled by centrifugal force. When used on a horizontal shaft, a minimum axial load must be applied.
Pressed steel plate, polyamide resin, machined high-strength brass or mild steel are used for cages.
Care must be taken in handling to prevent damage to the separable rings and ball assembly.

## 1.2.9 Spherical Roller Thrust Bearings

The raceway of housing washer of this bearing type is spherical with the center of the radius located on the bearing axis. The design provides self-alignment capability to the bearing. The contact angle (see sketch below) is approximately 45° enabling the bearing to support axial load and a small to moderate amount of radial load.
NACHI Spherical Roller Thrust bearings can sustain high loads at low-to-moderate speeds.
Because of the large load capacity and self-aligning characteristics, this bearing type is often used for injection molding machines, crane hooks and other large machines.
Cages are made from machined, high-strength brass or pressed steel.

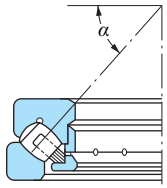

# 2. Selection of Rolling Contact Bearings

Rolling contact bearings are important, often critical, components of machinery. To meet the demands of a large variety of applications, rolling contact bearings are manufactured in a wide variety of types, sizes, and configurations. While machine performance and service life depend on which bearings are selected, it is often difficult to select the optimal bearing from among the many available variations.

While there is no "best" procedure for selecting the optimal bearing, Figure 2.1 provides an example of a procedure based on the establishment of priorities for the required bearing characteristics.

**Fig. 2.1 Bearing Selection Procedure**

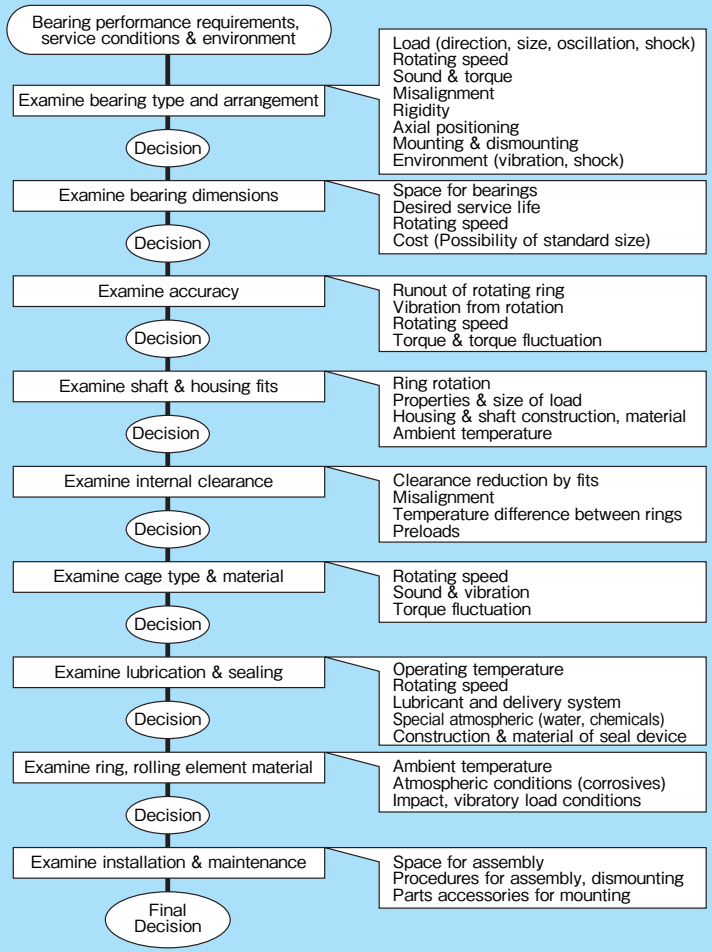






## 2.1 Bearing Type Selection Considerations

### 2.1.1 Load

Bearing types are selected according to the types of load (radial, axial, moment) and the magnitude of these loads on the bearing.

Table 2.1 outlines the types of load and applicable bearing types. In bearings of identical dimensional series, a roller bearing will have a greater load rating capacity than a ball bearing.

### 2.1.2 Rotating Speed

Limiting speed of bearings is determined by bearing type, bearing dimensions, accuracy of work, construction of cages, load, lubricating system, and seal type and design. The bearing dimension tables show the rotating speed limits of standard rolling contact bearings as a guide of bearing type selection.

Bearings used at high rotating speeds should generally have high accuracy. In applications over the limiting speed, please consult NACHI for assistance.

### 2.1.3 Noise and Torque

All NACHI rolling contact bearings are designed and manufactured to operate with low noise and torque levels. Of the many types of ball and roller bearings, single-row deep-groove ball bearings will tend to operate with the lowest noise and torque levels.

### 2.1.4 Alignment

If the accuracy of alignment of the shaft and bearing housing is poor or the shaft is deflected due to load, the inner and outer rings of the bearings will be misaligned.

Non-self-aligning rolling contact bearings are capable of tolerating only that amount of misalignment which can be handled by the assembled internal clearance. If large inclination is expected to occur between the inner and outer rings, the choice of bearings should be from types such as thrust ball bearings with self-aligning washer, Self-aligning ball bearings, or Spherical roller bearings.

The permissible angle of inclination of bearings differs by bearing type, internal clearance, and load conditions. Table 2.2 outlines the permissible angles of misalignment by bearing type.

Internal bearing damage can occur if misalignment in the bearing is greater than the permissible angle. Please contact NACHI for assistance.

### 2.1.5 Rigidity

When rolling contact bearings are loaded, the contact section between the bearing rings and rolling elements will elastically deform. The magnitude of this elastic deformation will differ depending on load, bearing type, and bearing dimensions.

If bearings of identical dimension series are compared, roller bearings will have a much higher level of rigidity than ball bearings, and if bearings of identical type are compared, bearings of larger dimensions will have higher rigidity than those of smaller dimensions. (Preloading combinations of units of two or more bearings will increase rigidity.)

### 2.1.6 Mounting, Dismounting

Rolling contact bearings can be divided into bearing types classed as separable or non-separable. Mounting and dismounting is facilitated if a separable bearing type is used.

Use of tapered-bore bearings and sleeves or hydraulic assist also makes bearing mounting and dismounting easier.

There is a possibility that noise and shortening of life occur due to poor mounting of bearings. When bearings are mounted, the following items should be noticed.

- Keep the bearings clean

- Prevent from Rusting
- Protect bearings from damage

## 2.1.7 Axial Location; Bearing Arrangement

Generally the shaft is supported by two units (or the equivalent to two units) of bearings. Generally, one of the bearings acts to hold (or fix) the axial position of the assembly and the other bearing acts to allow linear expansion.
The fixed side bearing must be firmly seated against both housing and shaft.
Table 2.3 shows representative examples of actual bearing arrangements according to service conditions.

## 2.1.8 Bearing Environment

If there is a comparatively large source of vibration near the bearing mount, or if the bearing is to handle impact loading, the use of Spherical roller bearings or Spherical roller thrust bearings is recommended.
Standard bearings will not be suitable to operate under severe condition (load, rotating speed, operating temperature, lubrication amount, vibrating environment).





**Table 2.1 Applicable Bearings vs Load Type**

| Bearing type \ Load type | Radial | Axial | Moment | | | |
|---|---|---|---|---|---|---|
| | ● | | ● | ● | | ● |
| | | ● | ● | | ● | ● |
| | | | | ● | ● | ● |
| Single row Deep-groove Ball Bearings | ○ | △ | ○ | ○ | △ | ○ |
| Single row Angular Contact Ball Bearings | | ○ | ○ | | | |
| Duplex Angular Contact Ball Bearings | ○ | ○ | ○ | ○ | ○ | ○ |
| Double row Angular Contact Ball Bearings | ○ | △ | ○ | ○ | △ | ○ |
| Cylindrical Roller Bearings | ○ | | △ | | | |
| Single row Tapered Roller Bearings | | ○ | ○ | ○ | ○ | ○ |
| Double row Tapered Roller Bearings | ○ | ○ | ○ | ○ | ○ | ○ |
| Four-row Tapered Roller Bearings | ○ | ○ | ○ | | | |
| Spherical Roller Bearings | ○ | | △ | | | |
| Thrust Ball Bearings · Thrust Roller Bearings | | ○ | | | △ | |

Remarks: ○ Bearing type can meet the load type.
△ Bearing can meet the load type conditionally. (Contact NACHI for more information.)

**Table 2.2 Permissible Misalignment of Bearing Types**

| Bearing Type | Permissible angle of misalignment |
|---|---|
| Single row Deep-groove Ball Bearings | 1/300 |
| Single row Angular Contact Ball Bearings | 1/1000 |
| Cylindrical Roller Bearings | 1/1000 |
| Tapered Roller Bearings | 1/800 |
| Thrust Ball Bearings | 1/2000 |

**Table 2.3 Example of Bearing Arrangements**

| No. | Mounting examples | Applicable bearings A | Applicable bearings B | Application & design considerations |
|---|---|---|---|---|
| ① | 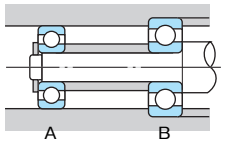 | Deep Groove Ball Bearing<br>Spherical Roller Bearing | Deep Groove Ball Bearing<br>Spherical Roller Bearing | 1. Popular mounting.<br>2. Ball bearings can support light-to-moderate axial loads.<br>3. One of the bearing outer ring must be free to move axially to handle thermal expansion.<br>4. Spherical roller bearings are good for heavy radial loads and light axial loads. |
| ② | 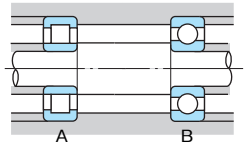 | Cylindrical Roller Bearing; N, NU configuration | Deep Groove Ball Bearing | 1. Popular mounting.<br>2. Not recommended to be used to handle angular misalignment and shaft deflection.<br>3. One of the bearings outer rings does not need to be configured to move.<br>4. Cylindrical roller bearing used on side that supports heavy load. |
| ③ | 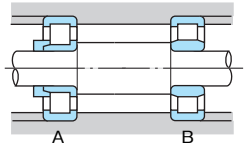 | Cylindrical Roller Bearing; NH configuration | Cylindrical Roller Bearing; N, NU configuration | 1. Easy mounting arrangement where interference fit is required for both inner and outer rings.<br>2. Not recommended for handling angular misalignment.<br>3. Thermal expansion taken internally.<br>4. Suitable for light axial load applications. |
| ④ | 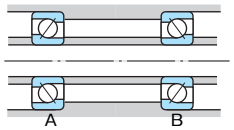 | Deep Groove Ball Bearing<br>Angular Contact Ball Bearing | Deep Groove Ball Bearing<br>Angular Contact Ball Bearing | 1. Preloading allows good rigidity.<br>2. Care must be taken in design of preload amount.<br>3. Angular contact ball bearings are better than Deep groove ball bearings for moderate axial loads and preload. |
| ⑤ | 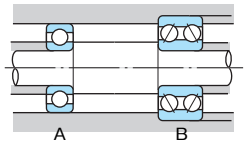 | Deep Groove Ball Bearing<br>Cylindrical Roller Bearing; N, NU configuration | Double row Angular Contact Ball Bearing<br>Double row Angular Contact Ball Bearing | 1. Good for comparatively heavy axial loads that bear on either the left or right side.<br>2. Outer ring needs to be allowed to move right and left when deep groove ball bearing is used for side <A>. This is not needed if a cylindrical roller bearing is used and it is good for supporting larger radial loads. |
| ⑥ | 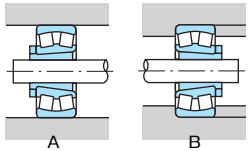 | Self-Aligning Ball Bearing<br>Spherical Roller Bearing | Self-Aligning Ball Bearing<br>Spherical Roller Bearing | 1. Good for angular misalignment and shaft deflection.<br>2. Use with adapter for long shafts which eliminates shaft shoulders and threading.<br>3. Outer ring of one bearing must be free to move in order to compensate automatically for thermal expansion or mounting errors.<br>4. Not recommended for large axial loads. |





| No. | Mounting examples | Applicable bearings A | Applicable bearings B | Application & design considerations |
|---|---|---|---|---|
| ⑦ | 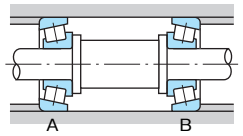 | Tapered Roller Bearing | Tapered Roller Bearing | 1. General application, direct mounting ("face-to-face").<br>2. Good for heavy axial loads and preloading.<br>3. Inner ring is attached to the shaft in advance during assembly so inner ring interference is advantageous. |
| ⑧ | 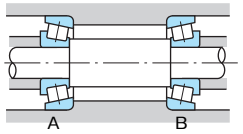 | Tapered Roller Bearing<br>Angular Contact Ball Bearing | Tapered Roller Bearing<br>Angular Contact Ball Bearing | 1. Indirect mounting ("back-to-back").<br>2. Good for providing rigidity to shaft, especially when using short moment for bearing spacing.<br>3. Good for large axial loads.<br>4. Often assembled with preloading, but need to be cautious of preloading amount.Also, inner clearance must be adjusted carefully when inner clearance is not provided. |
| ⑨ | 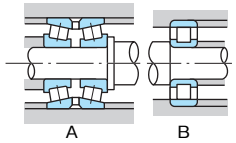 | Tapered Roller Bearing | Cylindrical Roller Bearing; N, NU configuration | 1. Used when accurate rotation is needed with comparatively heavy loads.<br>2. Preload to provide rigidity on side <A>.<br>3. Allows prevention of assembly error and thermal expansion in axial direction for cylindrical roller bearings.<br>4. Shaft and housing precision is good, assembly error must be reduced. |
| ⑩ | 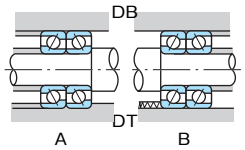 | Combination Angular Contact Ball Bearing | Combination Angular Contact Ball Bearing | 1. Used when accurate rotation is needed with light loads.<br>2. Provides shaft rigidity through preload configuration for each bearing.Inner clearance not normally provided.<br>3. Two bearings are set as a paired assembly, bearings must be examined for precision.<br>4. Mounting example above the shaft center line is DB assembly (called DF type when reversed), the lower part is called DT assembly. |
| ⑪ | 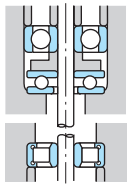 | Deep Groove Ball Bearing & Thrust Ball Bearing<br>Cylindrical Roller Bearing & Thrust Ball Bearing | Cylindrical Roller Bearing<br>Cylindrical Roller Bearing | 1. Thrust ball bearing should be close to radial bearing to reduce shaft deflection.<br>2. When using a thrust ball bearing on a horizontal shaft, preloading must be done so that clearance does not occur between washer and rolling elements.<br>3. If shaft deflection or assembly error cannot be avoided, use thrust ball bearing with aligning seat or shperical back-face type. |
| ⑫ | 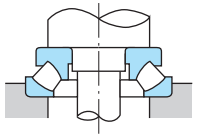 | Spherical Roller Thrust Bearing | ( Radial Bearing ) | 1. Can be used when radial load is 55% or lower than the axial load.<br>2. Has self-aligning capability which can absorb housing error.<br>3. Good for heavy axial load.<br>4. Not normally used for high-speed rotation components.<br>5. Normally used in conjunction with radial bearings.<br>6. Use with preload. |

# 3. Load Capacity and Life of Rolling Contact Bearings

## 3.1 Basic Dynamic Load Rating and Rating Life

Although requirements of rolling contact bearings vary somewhat with the individual application the principal requirements are:

- High load capabilities
- Smooth and quiet rotation
- High rigidity
- Low friction
- High accuracy
- Reliability

The reliability or durability requirement sets the time frame over which all other requirements are to be maintained. The reliability requirement (life in the broad sense) includes grease and acoustic life, as well as fatigue life. Reliability is reduced by various types of damage and degradation.

Improper handling, mounting, lubrication, and fits are the major causes of problems leading to lower-than-calculated bearing life. Regardless of how well they are maintained or mounted or handled, dynamic bearings will eventually fail from rolling fatigue generated by the repetitive stress of bearing load.

The service life of a bearing can be examined from two perspectives: 1) If, from inspection, a trace of fatigue becomes noticeable, the bearing should be deemed not suitable for further use; or 2) length of bearing life in hours or revolutions can be predefined as a limit beyond which the bearing is automatically replaced.

Since calculated fatigue life will vary with the size and type of bearings used under identical load conditions, great care must be taken in the analysis of the load conditions and the final choice of bearings to satisfy the application requirements.

Fatigue lives of individual bearing are dispersed. When a group of identical bearings operate under the same conditions, the statistical phenomenon of dispersion will appear. Use of average life is not an adequate criterion for selecting rolling contact bearings. Instead, it is more appropriate to consider a limit (hours or numbers of revolutions) which a large percentage of the operating bearings can attain.

Accordingly, the rating life and basic dynamic load rating Cr or Ca are defined using the following definition:

- Basic rating life is defined as the total number of revolutions (or total operating hours at some given constant speed) that 90% of a group of identical bearings operated individually under equal conditions can complete without suffering material damage from rolling fatigue.
- Basic dynamic load rating (Cr or Ca) is defined as a bearing load of constant direction and size that ends the bearing life after one million revolutions.

Constant-direction radial or thrust loads (for radial and thrust bearings, respectively) are used as the basis of the ratings.

The rating life of bearings is calculated by formulas (3.1) and (3.2):

$$L = \left(\frac{C}{P}\right)^p \quad \cdots\cdots (3.1)$$

$$L_h = \left(\frac{C}{P}\right)^p \cdot \frac{10^6}{60\,n} \quad \cdots\cdots (3.2)$$

Where:

- L : Basic rating life ($10^6$ rev.)
- $L_h$ : Basic rating life in hours
- C : Basic dynamic load rating (N). (Cr for radial bearings and Ca for thrust bearings)
- P : Bearing load (dynamic equivalent load) (N) Pr for radial, and, Pa for thrust bearings
- p : 3 for ball, 10/3 for roller bearings
- n : Rotating speed ($min^{-1}$)





The relationship of fh, the bearing life factor and $f_n$, the speed factor, is outlined in Table 3.1.

Formula (3.3) may be used to determine the basic dynamic load rating, C, of bearings given the bearing equivalent load, P, and the operating speed, n, in revolutions-per-minute.

$$C = \frac{P}{f_n} \cdot \left(\frac{L_h}{500}\right)^{1/p} \quad \cdots\cdots (3.3)$$

The lives of automobile wheel bearings may be defined in kilometers using the formula (3.4).

$$L_s = \frac{\pi \cdot D}{1000} \cdot L \quad \cdots\cdots (3.4)$$

Where:

- $L_s$ : Kilometer traveled ($10^6$ km)
- D : Outside diameter of wheel (m)
- L : Life in revolutions

Table 3.2 shows values for the life factor, fh, by application and machine type.

If a bearing is used with vibrating or impact loads or low speed including no rotation, additional study with basic static load rating is required.

**Table 3.1 Bearing Basic Rating Life; Life and Speed Factors**

| | Ball Bearings | Roller Bearings |
|---|---|---|
| Basic Rating Life | $L_h = 500\, f_h^{\,3}$ | $L_h = 500\, f_h^{\,\frac{10}{3}}$ |
| Life Factor | $f_h = f_n \frac{C}{P}$ | $f_h = f_n \frac{C}{P}$ |
| Speed Factor | $f_n = \left(\frac{10^6}{500 \times 60\,n}\right)^{\frac{1}{3}}$ | $f_n = \left(\frac{10^6}{500 \times 60\,n}\right)^{\frac{3}{10}}$ |

**Table 3.2 Guideline for Service Life Factor Required for Various Applications**

| Application conditions | Application example | Life Factor ($f_h$) |
|---|---|---|
| Infrequent use | Hinges | ~1.5 |
| Short period or Intermittent use | Hand tools<br>Agricultural equipment<br>Household apparatus<br>Casting plant cranes | 2~3 |
| Intermittent, critical use | Power plant auxiliary machines<br>Assembly line conveyers<br>General crane applications<br>Motors for home air conditioning | 3~4 |
| 8 hour per day, intermittent | General gearing applications<br>General industrial motors | 3~5 |
| 8 hour per day, continuous | Cranes in continuous use<br>Air blowers<br>Mechanical power transmission<br>General industrial machinery<br>Industrial wood-working machines | 4~5 |
| 24 hour per day, continuous | Compressors<br>Mine hoists<br>Marine propeller shafts<br>Rolling machine tables | 5~8 |
| 24 hours per day, breakdowns not allowed | Paper manufacturing<br>Power plants<br>Water supply equipment<br>Mine water pumps, air blowers | 6~ |





## 3.2 Basic Rating Life Calculation Guide

- Determine the bearing life normal to the application by using Table 3.2 to define the life factor, fh.
- Use rating life charts (nomograms) to calculate life. The nomogram for ball bearings is shown in Fig. 3.4. The nomogram for roller bearings is shown in Fig. 3.5. These nomograms are based on formulas (3.1) and (3.2).
- Where operating temperatures are to be in excess of 150°C, a correction factor must be applied to the bearing basic dynamic load rating. (See Item 3.3.1).
- If the bearings are to operate with vibration or impact loading, or where a bearing mounting or manufacturing error exists, the actual load may be greater than the calculated load. In this case, the calculated load must be multiplied by a safety factor to obtain an approximation of the actual load. For safety factors in actual application, refer to the machine and drive factors. (See Item 3.4.1 and 3.4.2)
- Bearings do not always operate under a constant load. When the bearing operates with a fluctuating load, the load must be converted to a constant size reflecting the effect of the fluctuating load. Conversion may be done using weighted average mean loading (See Item 3.4.4).
- By definition, bearing load Pr (simple radial load) or Pa (simple axial load) is a load with constant direction and size. When a composite load of radial and axial loads occurs on a radial bearing, these loads must be converted to a radial load reflecting the effect of the composite load. This effective load is called the DYNAMIC EQUIVALENT LOAD. (See Item 3.5).
- When calculating bearing load using the loads on a position on the shaft, it is necessary to calculate center distance between the load application point of the bearings. Many bearing types have load center points at the center line of the width as shown in Fig. 3.1. Single-row Angular Contact ball bearings and single-row Tapered roller bearings, have load center points off-center to the center line of the bearing width (See Fig. 3.2 and 3.3 respectively). Refer to the dimension tables for the value of the off-set.

**Fig 3.1**

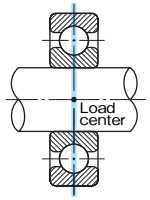


**Fig 3.2**

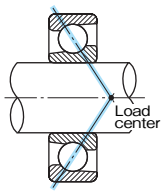


**Fig 3.3**

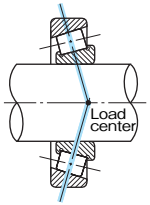


- The axial load limit for Cylindrical roller bearings is a function of the lubrication conditions and speed of rotation. This limit differs from a rating load as determined by fatigue life. (See Item 3.7).

Calculation example: 1

Suppose that an application has selection parameters as follows:

Bore: 50 mm or smaller

Outside diameter: 100 mm or smaller

Width: 20 mm or smaller

Radial load (Fr): 4000 N (Newtons)

Rotating speed (n): 1800min$^{-1}$

Life factor (fh): 2 or greater

Bearing type: Single-row deep groove ball bearing

From Table 3.1 the speed factor, fn is obtained as follows:

$$f_n = \left(\frac{10^6}{500 \times 60 \times 1800}\right)^{1/3} = 0.265$$

From Table 3.1,

$$Cr = \frac{f_h \cdot P}{f_n} = \frac{2 \times 4000}{0.265} = 30188N$$

Bearings having the required basic dynamic load rating are selected from the bearing dimension table(s). Of the two sizes meeting the load and diameter constraints, only bearing 6209 will satisfy the width constraint. Given the above parameters, bearing part 6209 would be the selection.

| Bearing | Bore Dia. (mm) | Outside Dia. (mm) | Width (mm) | Basic Dynamic Load Rating (N) |
|---|---|---|---|---|
| 6209 | 45 | 85 | 19 | 32500 |
| 6307 | 35 | 80 | 21 | 33500 |





**Fig 3.4**

**Ball Bearings**

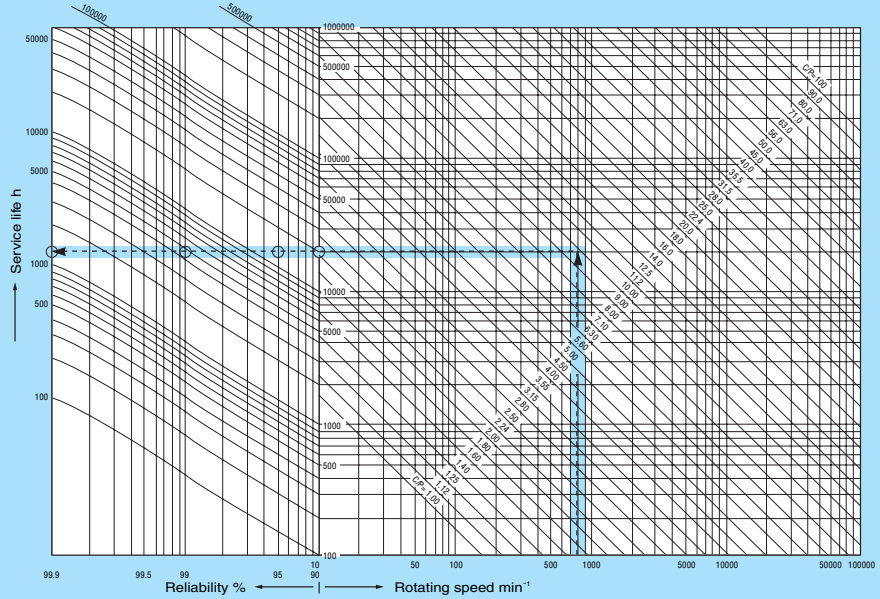


Calculation example: 2

Object is to obtain service live for various levels of reliability for bearing number 6012 loaded with a dynamic equivalent radial load of Pr = 2940N, at rotating speed of n = 800 min$^{-1}$

Basic dynamic load rating is from dimension table (P147).

Cr=29400N

$$\frac{Cr}{Pr} = 10$$

*See Item 3.3.2 regarding reliability.

According to dotted line in figure;

| | | |
|---|---|---|
| *When reliability is 90 | % | 20000 h |
| Reliability is 95 | % | 15000 h |
| Reliability is 99 | % | 4500 h |
| Reliability is 99.9 | % | 1200 h |

Fig 3.5

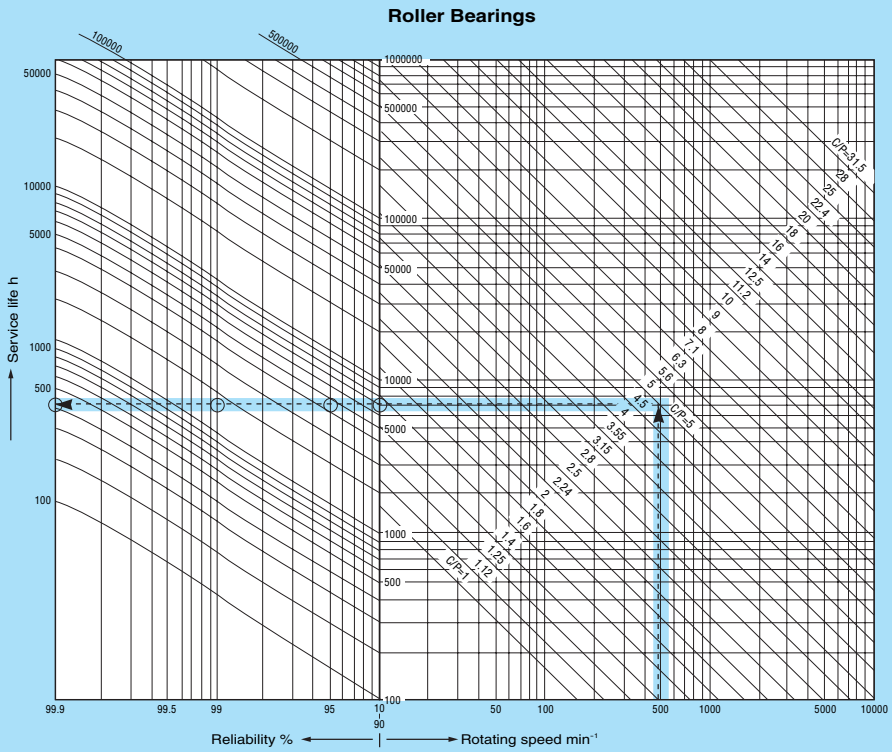


Calculation example: 3

Object is to obtain service live for various levels of reliability for bearing number 22222EX loaded with a dynamic equivalent radial load of Pr = 98000N, at rotating speed of n=500min⁻¹.

Basic dynamic load rating is from dimension table (P311).

Cr=490000N

$$\frac{Cr}{Pr}=5$$

According to dotted line in figure;

| | | |
|---|---|---|
| *When reliability is 90 | % | 7000 h |
| Reliability is 95 | % | 4400 h |
| Reliability is 99 | % | 1500 h |
| Reliability is 99.9 | % | 400 h |

*See Item 3.3.2 regarding reliability.





# 3.3 Rating Life and Operating Temperature

## 3.3.1 Temperature-Related Decrease in Basic Dynamic Load Rating

Bearing ring diameters grow slightly with an increase in temperature. If the operating temperature does not exceed about 120°C, the bearing rings will return to their original dimensions at normal temperature. If the operating temperature exceeds this level (approximately 120°C), the bearing rings and rolling elements can undergo small, permanent changes in size.

To prevent these permanent changes in size, special heat-stabilization treatment can be used (see Table 3.3).

The S26 heat-treated bearings will resist dimensional change through a maximum temperature of 150°C. Bearings with the S26 heat-treated steel will suffer decreases to their rating life and will have dimensional changes if they are used at temperatures in excess of 150°C.

The S28 heat-treated bearings will resist dimensional change and have a temperature factor of 0.90 through a maximum temperature of 200°C.

If bearings are operated at temperatures exceeding the limit of the heat-stabilization, hardness of the bearing steel will be reduced. In calculating the life of such bearings, the basic dynamic load rating must be multiplied by the temperature factor as shown in Table 3.4.

Standard bearings run at an operating temperature exceeding 150°C, are subject to the basic dynamic load rating decreases as shown in Table 3.4.

**Table 3.3 Heat Stabilization Treatment**

| Operation temperature range | Heat stabilization treatment symbol |
|---|---|
| ～150°C | S26 |
| ～200°C | S28 |

**Table 3.4 Temperature Factor**

| Bearing Temperature | ～150°C | 175°C | 200°C |
|---|---|---|---|
| Temperature Factor | 1 | 0.95 | 0.90 |

## 3.3.2 Life Calculation Factors

Rating Life Formula, $L=(C/P)^p$..... (3.1), is used when applying rolling contact bearings for normal use.

To provide for utilization of lubrication theory, and advances in bearing material and bearing manufacturing technology, the ISO and JIS have adopted the following life calculation formula.

**Table 3.5 Reliability Factor $a_1$**

| Reliability % | 99 | 98 | 97 | 96 | 95 | 90 |
|---|---|---|---|---|---|---|
| $a_1$ | 0.21 | 0.33 | 0.44 | 0.53 | 0.62 | 1 |

$$L_{na} = a_1 \cdot a_2 \cdot a_3 \cdot \left(\frac{C}{P}\right)^p \quad \cdots\cdots\cdots\cdots \quad (3.5)$$

where:

$L_{na}$ : Adjusted rating life ($10^6$ rev.)
$a_1$ : Reliability factor
$a_2$ : Material factor
$a_3$ : Application conditions factor

Formula (3.5) is applicable only when all bearing loads are considered and operating conditions are clearly defined.

Generally, reliability of 90% is used, and material and operating conditions may be considered as $a_1$, $a_2$, $a_3$=1, coinciding with formula (3.1)

1) Reliability Factor, $a_1$

Reliability Factor, $a_1$, becomes 1 if 90% of a group of identical bearings operated individually under the same conditions can complete the calculated life without exhibiting material damage from rolling fatigue. Reliability is then set as 90%, and for reliability over 90%; $a_1$ takes a value from Table 3.5.

As observed from Table 3.5, the calculated bearing life decreases in proportion to a higher level of bearing reliabilities.

Fig. 3.6 shows the improved reliabilities when bearings having rating lives of 3, 6, 10 and 20 times are used in comparison with the 90% reliability (life-multiplying factor being 1) of a bearing having a given rating life.

**Fig 3.6 Reliability Graph**

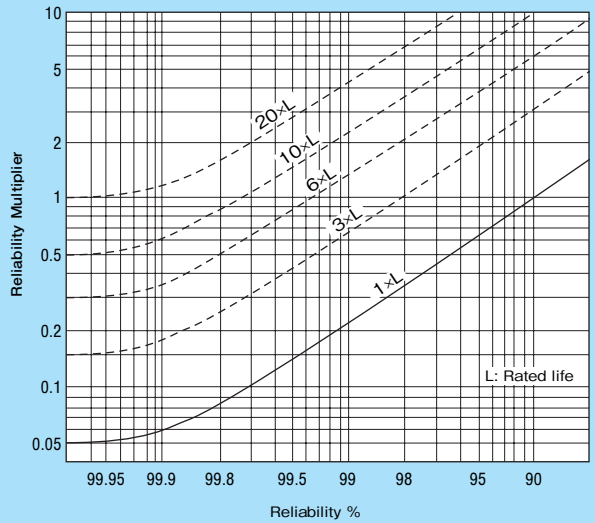






Calculation example: 4

Bearing Number 6209 is used to support a radial load of 3160N. Object is to define the life and select a bearing which will have a reliability of 99.4%.

The life corresponding to the reliability of 90% is obtained as follows by reading the basic dynamic load rating, Cr=32500N from the dimension table and using formula (3.1):

$$\left(\frac{32500}{3160}\right)^3 \times 10^6 = 1088 \times 10^6 \text{rev.}$$

Reading Fig. 3.6, it can be seen that a bearing having a life -multiplying factor of 6 is required to attain 99.4% reliability. Applying this multiplier to the basic dynamic load rating, Cr as obtained from formula (3.1), will calculate as:

$$\left(\frac{Cr}{3160}\right)^3 \times 10^6 = 6 \times 1088 \times 10^6 \text{rev.}$$

From the above equation, obtain;

$$Cr = (6)^{1/3} \times 32500 = 1.817 \times 32500 = 59000\text{N}$$

The bearing meeting this basic dynamic load rating (in the same diameter series) is bearing number 6214.

2) Material factor, $a_2$

Material factor, $a_2$, is the adjustment factor applied as an increase to rating life for type and quality of material, special manufacturing process and/or special design.

The basic dynamic load rating, Cr (or Ca), listed in the bearing dimension tables reflects both the use of vacuum-degassed, high-carbon chrome bearing steel for all NACHI rolling contact bearings as well as improvements in manufacturing technology. The $a_2$-factor has a base value of 1 for NACHI standard parts.

Unless specialty steels are utilized, $a_2$ is defined as 1 when calculating the life using the formula (3.5).

3) Application condition factor, $a_3$

The application condition factor, $a_3$, is used to consider bearing load conditions, lubricating conditions, and temperature conditions.

Factor $a_3$ is set as 1 if the rolling elements and raceway surfaces are separated (good lubricating condition). When lubricating conditions are poor (as in the following cases), $a_3$ is less than 1:

- When the operating speed is slower than dm·n = 10,000. (Where dm·n = rolling element pitch diameter in millimeters times the speed in revolutions-per-minute).
- When lubricant has deteriorated.

At present, it is difficult to quantify the application condition factor because of the many variables involved.

Because factors $a_2$ and $a_3$ have interactive effects on each other, these two factors are treated as one value ($a_2$) ($a_3$). When lubrication and application conditions are good, the value ($a_2$) ($a_3$) can be set as equal to 1.

In case of poor lubrication such as when lubricant viscosity is considerably low, please consult NACHI.

# 3.4 Calculation of Bearing Load

Generally, the load that is applied to bearings is composed of loads generated by machine operation, drive components, and dead weight of the shaft and components mounted to and on the shaft. These loads can be precisely calculated. The above loads are usually accompanied by vibration and impact. With the exception of very special cases, it is impractical to calculate and add the specific effects of vibration and impact loading on each component in a machine. To facilitate the calculation and analysis of loading in a machine system, loading factors (based on empirical experience) have been developed as multipliers to the driving and static loads.

$$F = f_s \cdot F_c \quad \cdots\cdots (3.6)$$

where:

- $F$ : Bearing load (N)
- $f_s$ : Machine factor (Table 3.6)
- $F_c$ : Calculated load (N)

When a load fluctuates in magnitude, an average load must be calculated which reflects the effects of the fluctuating load.

When a composite load of radial and axial load occurs on a radial bearing, the loads must be converted to an effective radial load by use of the dynamic equivalent load formula for the specific bearing type. This value, P, is used in the basic rating life formula (3.1).

## 3.4.1 Belt Drives

Transferring power through belt drives requires initial belt tension. Radial load, K, that occurs from this tension can be calculated as follows:

$$M = 955000 \cdot \frac{H}{n} \quad \cdots\cdots (3.7)$$

$$K_t = \frac{M}{r} \quad \cdots\cdots (3.8)$$

where:

- $M$ : Rotating moment of pulley (N·cm)
- $K_t$ : Effective transfer power of belt (N) (tension side minus slack side)
- $H$ : Transfer power (kW)
- $n$ : Rotating speed of pulley ($min^{-1}$)
- $r$ : Radius of pulley (cm)

Load that works on the shaft through the pulley is calculated by multiplying the effective transfer power, Kt, by the belt drive factors, $f_1$, from Table 3.7.

Generally,

$$K = f_1 \cdot K_t \quad \cdots\cdots (3.9)$$

where:

- $K$ : Radial load (N) applied to the pulley transferred by the belt
- $f_1$ : Belt drive factor (Table 3.7)

**Table 3.6 Machine Factors ($f_s$)**

| Type of Machine | $f_s$ |
|---|---|
| Rotating machinery with no impact (motors, turbo compressor, conveyors, paper manufacturing machinery) | 1～1.2 |
| Machinery with low impact (internal combustion engines, reciprocating pumps, hoists, cranes) | 1.2～1.5 |
| Machines with high impact (drop hammers, crushers, rolling mill equipment) | 1.5～3.0 |

**Table 3.7 Belt Drive Factors ($f_1$)**

| Type of drive | $f_1$ |
|---|---|
| Flat leather belt (with tension pulley) | 1.75～2.5 |
| Flat leather belt (without tension pulley)<br>Silk belt, rubber belt<br>Balata belt | 2.25～3.5 |
| V-belt | 1.5～2 |
| Steel strip belt | 4～6 |
| Cotton belt, hemp belt | 2～6 |

Note: 1. For low speed use top value.

**Table 3.8 Gear Factors ($f_z$)**

| Type of gear | $f_z$ |
|---|---|
| Precision gears (Pitch and form errors of less than 0.02 mm) | 1～1.1 |
| Normal gears (Pitch and form errors of less than 0.02 to 0.1 mm) | 1.1～1.3 |





## 3.4.2 Gear Drives

Shaft load from gear drives are calculated using the transfer power and type of gear.

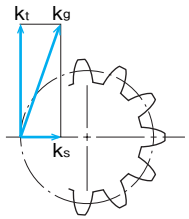


**Fig 3.7**

Helical, bevel and worm gears transmit radial loads and create an axial load component, while spur gears transmit only radial loads.

Gear load formulas described below refer to spur gears.

$$M = 955000 \cdot \frac{H}{n} \quad \cdots\cdots (3.10)$$

$$K_t = \frac{M}{r} \quad \cdots\cdots (3.11)$$

$$K_s = K_t \cdot \tan\alpha \quad \cdots\cdots (3.12)$$

$$K_g = \sqrt{K_t^2 + K_s^2} = K_t \cdot \sec\alpha \quad \cdots\cdots (3.13)$$

where:

- $M$ : Rotating gear moment (N·cm)
- $K_t$ : Tangential component of force (N)
- $K_s$ : Radial component of force (N)
- $K_g$ : Total gear load (N)
- $H$ : Transfer power (kW)
- $n$ : Rotating speed ($min^{-1}$)
- $r$ : Drive gear pitch radius (cm)
- $\alpha$ : Pressure angle of gear (°)

$K_g$, the total theoretical gear load, must be multiplied by both the gear precision factor and the machine factor (the latter of which takes into account impact and other forces dependent on machinery type).

$$K = f_z \cdot f_s \cdot K_g \quad \cdots\cdots (3.14)$$

where:

- $K$ : Gear load transmitted to shaft (N)
- $f_z$ : Gear precision factor (Table 3.8)
- $f_s$ : Machine factor (Table 3.6)

## 3.4.3 Load Distribution to Bearings

Load applied to a point on the shaft is distributed to the bearings supporting the shaft.

Reference Fig. 3.8,

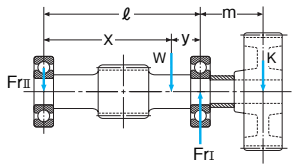


**Fig 3.8**

$$Fr_{I} = \frac{\ell + m}{\ell} K + \frac{x}{x+y} W \quad \cdots\cdots (3.15)$$

$$Fr_{II} = \frac{m}{\ell} K - \frac{y}{x+y} W \quad \cdots\cdots (3.16)$$

where:

- $Fr_{I}$ : Load working on bearing Ⅰ (N)
- $Fr_{II}$ : Load working on bearing Ⅱ (N)
- $K$ : Gear load transmitted to shaft (N)
- $W$ : Shaft Weight (N)
- $\ell$, m, x, y : Relative positions of the points of applied force.

## 3.4.4 Averaging Fluctuating Loads

A large load will have an emphasized effect on bearing life even if it is applied only for a very short duration of the total life-span of the bearing.

When the size of bearing load fluctuates with a defined cycle, bearing life may be calculated by deriving an average load simulating the affects of the fluctuating load.

(1) Step Type Load Fluctuation

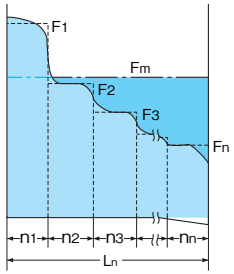


**Fig 3.9**

$$F_m = \sqrt[p]{\frac{F_1^p n_1 + F_2^p n_2 \cdots + F_n^p n_n}{n_1 + n_2 + \cdots\cdots + n_n}} \quad \cdots\cdots\cdots\cdots \quad (3.17)$$

where:

$F_m$ : Average of fluctuating load (N)
$n_1$ : Total number of revolutions at load $F_1$ (rev.)
$n_2$ : Total number of revolutions at load $F_2$ (rev.)
$n_n$ : Total number of revolutions at load Fn (rev.)
p : 3 for ball; 10/3 for roller bearings

In formula (3.17), if rotating speed is constant, and ($n_1$ + $n_2$ + ..... + $n_n$ ) is referenced as applied time, then $n_1$, $n_2$ and $n_n$ , can be replaced by time periods $t_1$, $t_2$, ..... $t_n$ respectively, in the formula.

(2) Linear Load Fluctuation

When the load fluctuates almost linearly (see Fig. 3.10), the following formula is used to obtain the average load.

$$F_m \fallingdotseq \frac{1}{3} F_{min} + \frac{2}{3} F_{max} \quad \cdots\cdots\cdots\cdots\cdots\cdots\cdots\cdots \quad (3.18)$$

where:

$F_m$ : Average load (N)
$F_{min}$ : Minimum load (N)
$F_{max}$ : Maximum load (N)

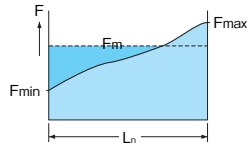


**Fig 3.10**

(3) Dynamic plus static load fluctuation

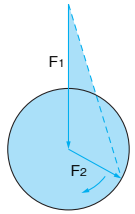


**Fig 3.11**

Where load $F_1$ of a constant size and direction, is combined with a constantly revolving load $F_2$ caused by an unbalanced load on the bearing (see Fig. 3.11), the average load is calculated using formula 3.19.

$$F_m \fallingdotseq AF_1 + F_2 \quad \cdots\cdots\cdots\cdots\cdots\cdots\cdots\cdots\cdots\cdots \quad (3.19)$$

Value of A is taken from Fig. 3.12.

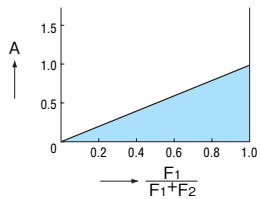


**Fig 3.12**

Calculation example: 5

A Single-row Deep-groove ball bearing is loaded with the fluctuating radial loads shown below.

Object: to obtain an average radial load on the bearing.

$F_1$=100N: 800 $min^{-1}$ for 6 sec
$F_2$=50N: 1800 $min^{-1}$ for 20 sec
$F_3$=200N: 3600 $min^{-1}$ for 12 sec

Number of revolutions for the individual loads $F_1$, $F_2$ and $F_3$ are derived for the formula as follows.

$$n_1 = \frac{6}{60} \times 800 = 80 \text{ rev.}$$

$$n_2 = \frac{20}{60} \times 1800 = 600 \text{ rev.}$$

$$n_3 = \frac{12}{60} \times 3600 = 720 \text{ rev.}$$

Therefore,

$$n = n_1 + n_2 + n_3 = 1400 \text{ rev.}$$

From formula (3.17),

$$F_m = \sqrt[3]{\frac{100^3 \times 80 + 50^3 \times 600 + 200^3 \times 720}{1400}}$$

$$= 162 \text{ N}$$

# 3.5 Dynamic Equivalent Load

Dynamic equivalent load refers to a load having constant direction and magnitude such that theoretical calculations of bearing life using this load will simulate actual bearing life. This load is called dynamic equivalent radial load when calculated for radial bearings and dynamic equivalent axial load when calculated for thrust bearings.
In formula (3.1) expressing the relation between the bearing load and bearing life, bearing load, P, is either radial or axial load. Since radial and axial loads often occur simultaneously, the radial and axial loads must be converted to composite load within the dynamic equivalent load formula.

## 3.5.1 Dynamic Equivalent Radial Load

Dynamic equivalent radial load for radial bearings is calculated using the formula:

$$P_r = XF_r + YF_a \quad \cdots\cdots (3.20)$$

where:
- $P_r$ : Dynamic equivalent radial load (N)
- $F_r$ : Radial load (N)
- $F_a$ : Axial load (N)
- X : Radial load factor (from dimensional tables)
- Y : Axial load factor (from dimensional tables)

In the above formula, if the axial load to radial load ratio, Fa/Fr, is less than or equal to e (a value determined by the bearing size and load as shown in the dimension tables), X, Y, and Pr will be as follows:

$X = 1$
$Y = 0$
$P_r = F_r$

## 3.5.2 Dynamic Equivalent Axial Load

While most thrust bearings are incapable of supporting any radial load, Spherical roller thrust bearings will support some radial load.
For Spherical roller thrust bearings, the dynamic equivalent axial load is derived using the formula:

$$P_a = F_a + 1.2F_r \quad \cdots\cdots (3.21)$$

where:
- $P_a$ : Dynamic equivalent axial load (N)
- $F_a$ : Axial load (N)
- $F_r$ : Radial load (N)
- $F_r/F_a$ must be $\leqq 0.55$

## 3.5.3 Dynamic Equivalent Load for Oscillating Loads

The dynamic equivalent load of radial bearings sustaining oscillating movements is derived using the formula:

$$P_r = \left(\frac{\psi}{90^\circ}\right)^{1/p} (XF_r + YF_a) \quad \cdots\cdots (3.22)$$

where:
- Pr : Dynamic equivalent load (N)
- $\psi$ : Angle of oscillation ($\psi$ must be $\geqq 90^\circ/Z$)
- p : 3 for ball and 10/3 for bearings
- $F_r$ : Radial load (N)
- $F_a$ : Axial load (N)
- X : Radial load factor (from dimensional tables)
- Y : Axial load factor (from dimensional tables)
- Z : Number of rolling elements in row





If the value of $\psi < 90^\circ/Z$, the above formula may not accurately predict bearing life since localized wear may be generated in the raceways. (Oil lubrication may be tried to prevent the wear (false brinelling) associated with low-amplitude operation in this type of application).

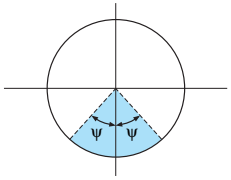


Fig 3.13

## 3.5.4 Angular Contact Ball; Tapered Roller Bearing Load

For single-row Angular Contact ball and single-row Tapered roller bearings, the load center dimensions from the bearing tables must be used when determining the relative load positions. The load-center positions of these bearings are off-set from the midpoint of the width of these bearings as shown in Fig 3.14 and 3.15).
The off-set dimension for Angular Contact ball and Tapered roller bearings is shown as the value "a" in the dimensional tables to indicate the load-center position. If moment loading is to be considered in a bearing system, location of load-center is of particular importance.
Where $\ell_1$, $m_1$, $x_1$ or $\ell'_1$, $m'_1$, $x'_1$, and $y'_1$ are applied to formulas (3.15) and (3.16) as effective intervals instead of $\ell$, m, x, and y previously used in formulas (3.15) and (3.16). If a radial load is applied to two units of Tapered roller bearings used in pairs, an induced axial load will be produced. The magnitude of this induced axial force Fa' is calculated using the formula:

$$F_a' = \frac{F_r}{2Y_1} \quad \cdots\cdots (3.23)$$

where:
- $F_a'$ : Induced axial load (N)
- $F_r$ : Radial load (N)
- $Y_1$ : Axial load factor (from dimension tables)

Axial and equivalent radial load on bearing calculated using formulas in Tables 3.9.

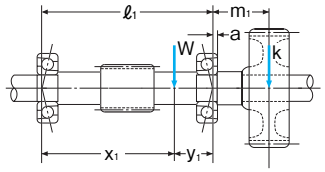


Fig 3.14

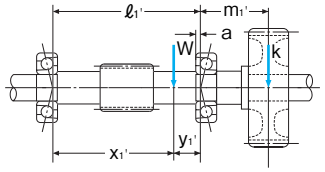


Fig 3.15

NACHI

$Fr_{I}$, $Fr_{II}$ : Radial load applied to bearings Ⅰ and Ⅱ (N)
$F_a$ : External axial load (N) direction shown by Table 3.9
$Pr_{I}$, $Pr_{II}$ : Dynamic equivalent radial load on bearing Ⅰ and Ⅱ (N)
$X_{I}$, $X_{II}$ : Radial Load Factor for bearings Ⅰ and Ⅱ from dimension tables
$Y_{I}$, $Y_{II}$ : Axial Load Factor for bearings Ⅰ and Ⅱ from dimension tables

**Table 3.9 Axial and Dynamic Equivalent Load of Angular Contact Ball and Tapered Roller Bearings**

| Bearing arrangement | Load conditions | | Axial load | Dynamic equivalent radial load |
|---|---|---|---|---|
| 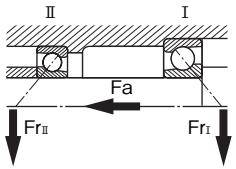  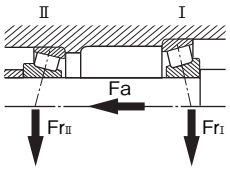  | $Fa \geqq 0.5\left(\frac{Fr_{I}}{Y_{I}} - \frac{Fr_{II}}{Y_{II}}\right)$ | | $Fa_{I}=Fa_{II}+Fa$<br>$Fa_{II}=0.5\ \frac{Fr_{II}}{Y_{II}}$ | $Pr_{I}=X_{I}Fr_{I}+Y_{I}(Fa_{II}+Fa)$<br>$Pr_{II}=Fr_{II}$ |
| 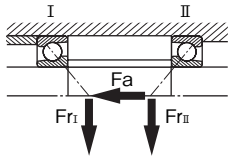  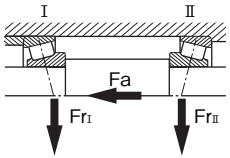  | $Fa < 0.5\left(\frac{Fr_{I}}{Y_{I}} - \frac{Fr_{II}}{Y_{II}}\right)$ | | $Fa_{I}=0.5\ \frac{Fr_{I}}{Y_{I}}$<br>$Fa_{II}=Fa_{I}-Fa$ | $Pr_{I}=Fr_{I}$<br>$Pr_{II}=X_{II}Fr_{II}+Y_{II}(Fa_{I}-Fa)$ |
| 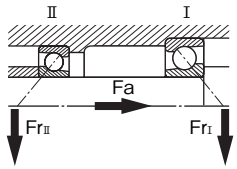  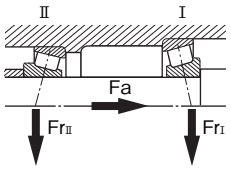  | $Fa \geqq 0.5\left(\frac{Fr_{II}}{Y_{II}} - \frac{Fr_{I}}{Y_{I}}\right)$ | | $Fa_{I}=0.5\ \frac{Fr_{I}}{Y_{I}}$<br>$Fa_{II}=Fa_{I}+Fa$ | $Pr_{I}=Fr_{I}$<br>$Pr_{II}=X_{II}Fr_{II}+Y_{II}(Fa_{I}+Fa)$ |
| 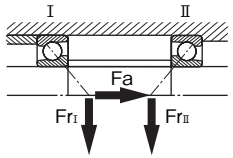  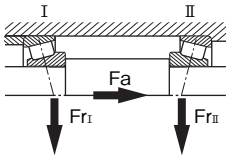  | $Fa < 0.5\left(\frac{Fr_{II}}{Y_{II}} - \frac{Fr_{I}}{Y_{I}}\right)$ | | $Fa_{I}=Fa_{II}-Fa$<br>$Fa_{II}=0.5\ \frac{Fr_{II}}{Y_{II}}$ | $Pr_{I}=X_{I}Fr_{I}+Y_{I}(Fa_{II}-Fa)$<br>$Pr_{II}=Fr_{II}$ |

Notes: 1. Apply when the bearing clearance and preload are 0.
2. Radial load in the direction opposite to the arrows above is also positive.

# 3.6 Basic Static Load Rating and Static Equivalent Load

## 3.6.1 Basic Static Load Rating

Load applied to stationary bearings can create permanent indentations in the load surfaces. While some level of deformation can be tolerated, a level of deformation will be reached where noise and vibration during operation of the bearing, will make the bearing unusable.
The term "Basic static load rating" refers to the maximum contact stress value of the static load where the rolling element and raceways contact. The ratings are:

- Self-aligning ball bearing... 4600MPa
- Other ball bearings..... 4200MPa
- Roller bearings..... 4000MPa

With these contact stresses, the sum of deformations (ball/roller and raceway) is approximately 1/10000 of the diameter of the rolling element.
Basic static load ratings are shown in the dimension tables for each bearing number. The symbol $C_{or}$ is for radial bearings and the symbol $C_{oa}$ is for thrust bearings.

## 3.6.2 Static Equivalent Load

Static equivalent load is the static load that reflects the actual load conditions to the contact section of the rolling elements and raceway receiving the maximum stress. For radial bearings, radial load of a constant direction and magnitude is called the static equivalent radial load, and for thrust bearings, axial load of a constant direction and magnitude is called the static equivalent axial load.

1) Static equivalent radial load
To calculate the static equivalent radial load of a radial bearing supporting simultaneous radial and axial loads, the larger of the values obtained from formulas (3.24) and (3.25) are to be used.

$$P_{or}=X_oF_r+Y_oF_a \quad \cdots\cdots (3.24)$$
$$P_{or}=F_r \quad \cdots\cdots (3.25)$$

where:
$P_{or}$ : Static equivalent radial load (N)
$F_r$ : Radial load (N)
$F_a$ : Axial load (N)
$X_o$ & $Y_o$ : Static radial and axial load factors from dimension tables

2) Static equivalent axial load
Static equivalent axial load for Spherical Thrust bearings is calculated using formula (3.26)

$$P_{oa}=F_a+2.7F_r \quad \cdots\cdots (3.26)$$

where:
$P_{oa}$ : Static equivalent axial load (N)
$F_a$ : Axial load (N)
$F_r$ : Radial load (N)
$F_r/F_a$ must be $\leqq 0.55$

## 3.6.3 Safety Factor

The basic static load rating is considered as the limiting load for general applications. An application may require a safety factor larger than 1 or allow a safety factor smaller than 1. Table 3.10 provides a guide for selection of the safety factor, $S_o$, to be used with formula (3.27) for calculation of the maximum (weighted) static equivalent load.

$$C_o=S_o \cdot P_{omax} \quad \cdots\cdots (3.27)$$

where:
$C_o$ : Basic static load rating (N)
($C_{or}$ for radial; $C_{oa}$ for thrust bearings)
$S_o$ : Safety factor (select from Table 3.10)
$P_{omax}$ : Static equivalent load (N)

**Table 3.10 Static Safety Factor $S_o$**

| Application conditions | $S_o$ | |
|---|---|---|
| | Ball Bearings | Roller Bearings |
| High rotating accuracy is needed | 2 | 3 |
| Vibration and / or impact present | 1.5 | 2 |
| Normal operating conditions | 1 | 1.5 |
| Small amount of permanent deformation is tolerable | 0.7 | 1 |

Note: Use value over 4 for Spherical Roller Thrust Bearings





# 3.7 Axial Load Capacity of Cylindrical Roller Bearings

Cylindrical roller bearings are generally used for supporting radial loads only. Bearings having flanges or loose ribs on both the inner and outer rings (such as on configurations NJ, NF, and NUP), are capable of supporting some amount of axial load. Since any axial loading on a cylindrical roller bearing is supported by a "sliding" action between the roller ends and flanges, allowable axial load is based on the limiting values of heat, seizure, and wear caused by this "sliding" contact.
Permissible axial loading (no consideration of bearing life as a radial bearing) on Cylindrical roller bearings is calculated using the following formula.

$$F_a=(p_v)\frac{\lambda}{n} \quad \cdots\cdots \text{Allowable axial load (N)}$$

$p_v$ : Application factor from Table 3.11.1
$\lambda$ : Bearing type factor from Table 3.11.2
$n$ : Rotating speed ($min^{-1}$)

However, there is another limit shown by the following formula because Fa exceeding the limit causes abnormal roller movement

Allowable axial load $\leqq k_1 \cdot F_r$

| Bearing series | $K_1$ |
|---|---|
| 1000、200、200E<br>300、300E、400 | 0.2 |
| 2200、2200E、2300、2300E | 0.4 |

**Table 3.11.1 Application Factor ($p_v$)**

| Operating conditions (Load and lubrication) | ($p_v$) |
|---|---|
| Intermittent axial load, good heat conduction and good cooling or very large amount of lubricant | 5400～6900 |
| Intermittent axial load, good heat conduction and large amount of lubricant | 2600～3200 |
| Oil lubrication, good heat conduction or good cooling | 1900～2200 |
| Continuous axial load and oil lubrication or intermittent axial load and grease lubrication | 1300～1600 |
| Continuous axial load and grease lubrication | 690～780 |

**Table 3.11.2 Bearing Type Factor $\lambda$**

| Diameter Series | $\lambda$ |
|---|---|
| 0 | 19d |
| 2 | 32d |
| 3 | 45d |
| 4 | 60d |

d = bearing bore (mm)

When cylindrical roller bearings have an applied axial load, additional considerations are required as follows;

- Apply sufficient radial load to overcome axial load
- Supply sufficient lubricant between roller ends and flanges
- Use lubricant which has good film strength (pressure resistant) properties
- Practice good bearing mounting accuracy (see section 8.3)
- Allow sufficient running-in
- Minimize radial bearing clearance

# 4. Boundary Dimensions and Bearing Numbers of Rolling Contact Bearings

## 4.1 Boundary Dimensions of Rolling Contact Bearings

Boundary dimensions have been established in a standard plan for metric rolling contact bearings to facilitate the selection process, improve availability, and to limit the necessity for use of high cost, non-standard parts.
Boundary dimensions standards include the bore diameter (d), outside diameter (D), width (B), assembly width (T) or height (H), and the chamfer dimension (r) of bearings.

Boundary dimensions are standardized by the International Organization for Standardization (ISO 15) and also Japanese Industrial Standard (JIS B 1512).
NACHI has adopted the ISO boundary dimension standards. Figures 4.6 and 4.7 show the relationship of the dimensions for radial and thrust rolling contact bearings (except for Tapered roller bearings).

**Table 4.1 Boundary Dimensions Terminology**

| Series | Definition | Remarks |
|---|---|---|
| Diameter series | The diameter series is a series of standard outside diameters with standard bore diameters. Several series of outside diameters are set in stages to the same bearing bore diameter. Diameter series are labeled by single digit numbers 7, 8, 9, 0, 1, 2, 3, and 4. | (1) Diameter series is in ascending order by diameter size with number 7 the smallest and 4 the largest.<br>(2) Each radial bearing diameter series has width series with numbers 8, 0, 1, 2, 3, 4, 5, 6. Number 8 is the minimum width to the same bore and outside diameter. Number 6 is the maximum width.<br>(3) Each thrust bearing diameter series has width series with number 7, 9, 1 and 2. Number 7 is the minimum width to the same bore and outside diameter. Number 2 is the maximum width. |
| Width or Height series | Width or height series is a series of standard widths or heights with the same bore diameter within the same diameter series of bearings. These width or height series are labeled with single digit numbers. Width series 8, 0, 1, 2, 3, 4, 5, and 6 for radial bearings and height series 7, 9, 1, and 2 are for thrust bearings. | |
| Dimension series | Dimension series = width or height series number + Diameter series. Dimension series are labeled with a two digit number by combining numbers for the width or height series to the numbers for the diameter series. The two digit number has the width or height series in the lead position. | |

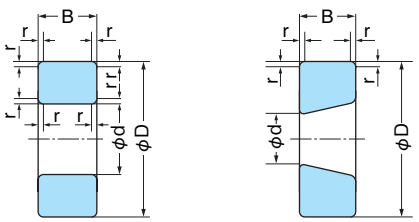


Cylindrical bore




Tapered bore (1/12 or 1/30 taper)

**Fig 4.1 Radial Bearings (except Tapered Roller Bearings)**

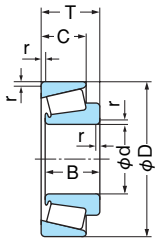


**Fig 4.2 Tapered Roller Bearings**





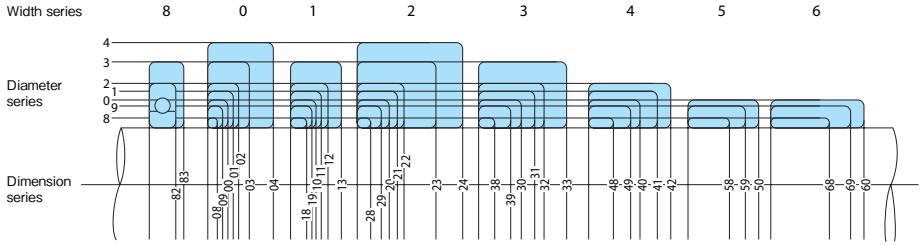


**Fig 4.6 Graphical Representation of the Dimension series of Radial Bearings (except Tapered Roller Bearings)**

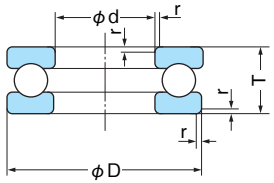


**Fig 4.3 Single-direction Thrust Ball Bearings**

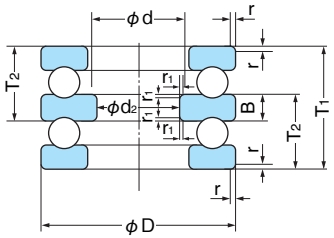


**Fig 4.4 Double-direction Thrust Ball Bearings**

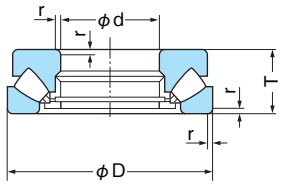


**Fig 4.5 Spherical Roller Thrust Bearings**

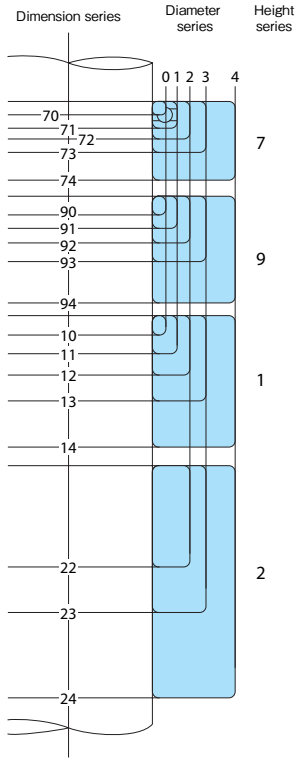


**Fig 4.7 Graphical Representation of the Dimension series of Thrust Bearings (except diameter 5 series)**

**Table 4.2.1 Boundary Dimensions of Diameter Series 7, 8, 9, and 0**

Unit: mm

| Bore No. | d | Nominal bearing outside diameter D | Diameter series 7 Width series 1 Dimension series 17 Width B | Diameter series 7 Width series 2 Dimension series 27 Width B | Diameter series 7 Width series 3 Dimension series 37 Width B | Chamfer dimensions 17 ~ 37 r (min) | Nominal bearing outside diameter D | Diameter series 8 Width series 0 Dimension series 08 Width B | Diameter series 8 Width series 1 Dimension series 18 Width B | Diameter series 8 Width series 2 Dimension series 28 Width B | Diameter series 8 Width series 3 Dimension series 38 Width B | Diameter series 8 Width series 4 Dimension series 48 Width B | Diameter series 8 Width series 5 Dimension series 58 Width B | Diameter series 8 Width series 6 Dimension series 68 Width B | Chamfer dimensions 08 r (min) | Chamfer dimensions 18 ~ 68 r (min) | Nominal bearing outside diameter D | Diameter series 9 Width series 0 Dimension series 09 Width B | Diameter series 9 Width series 1 Dimension series 19 Width B | Diameter series 9 Width series 2 Dimension series 29 Width B | Diameter series 9 Width series 3 Dimension series 39 Width B | Diameter series 9 Width series 4 Dimension series 49 Width B | Diameter series 9 Width series 5 Dimension series 59 Width B | Diameter series 9 Width series 6 Dimension series 69 Width B | Chamfer dimensions 09 r (min) | Chamfer dimensions 19 ~ 39 r (min) | Chamfer dimensions 49 ~ 69 r (min) | Nominal bearing outside diameter D | Diameter series 0 Width series 0 Dimension series 00 Width B | Diameter series 0 Width series 1 Dimension series 10 Width B | Diameter series 0 Width series 2 Dimension series 20 Width B | Diameter series 0 Width series 3 Dimension series 30 Width B | Diameter series 0 Width series 4 Dimension series 40 Width B | Diameter series 0 Width series 5 Dimension series 50 Width B | Diameter series 0 Width series 6 Dimension series 60 Width B | Chamfer dimensions 00 r (min) | Chamfer dimensions 10 ~ 60 r (min) |
|---|---|---|---|---|---|---|---|---|---|---|---|---|---|---|---|---|---|---|---|---|---|---|---|---|---|---|---|---|---|---|---|---|---|---|---|---|---|
| | | | 67 | | | | | | 68 | | | | | | | | | | 69<br>79 | | | | | | | | | | 160 | 60<br>70 | | | | | | | |
| | | | | | | | | | | | | | | | | | | | | | | NN49 | | | | | | | | N10 | | NN30 | | | | | |
| | | | | | | | | | | | | | | | | | | | | | 239 | | | | | | | | | | | 230 | 240 | | | | |
| /0.6 | 0.6 | 2 | 0.8 | – | – | 0.05 | 2.5 | – | 1 | – | 1.4 | – | – | – | – | 0.05 | – | – | – | – | – | – | – | – | – | – | – | – | – | – | – | – | – | – | – | – | – |
| 1 | 1 | 2.5 | 1 | – | – | 0.05 | 3 | – | 1 | – | 1.5 | – | – | – | – | 0.05 | 4 | – | 1.6 | – | 2.3 | – | – | – | – | 0.1 | – | – | – | – | – | – | – | – | – | – | – |
| /1.5 | 1.5 | 3 | 1 | – | 1.8 | 0.05 | 4 | – | 1.2 | – | 2 | – | – | – | – | 0.05 | 5 | – | 2 | – | 2.6 | – | – | – | – | 0.15 | – | 6 | – | 2.5 | – | 3 | – | – | – | – | 0.15 |
| 2 | 2 | 4 | 1.2 | – | 2 | 0.05 | 5 | – | 1.5 | – | 2.3 | – | – | – | – | 0.08 | 6 | – | 2.3 | – | 3 | – | – | – | – | 0.15 | – | 7 | – | 2.8 | – | 3.5 | – | – | – | – | 0.15 |
| /2.5 | 2.5 | 5 | 1.5 | – | 2.3 | 0.08 | 6 | – | 1.8 | – | 2.6 | – | – | – | – | 0.08 | 7 | – | 2.5 | – | 3.5 | – | – | – | – | 0.15 | – | 8 | – | 2.8 | – | 4 | – | – | – | – | 0.15 |
| 3 | 3 | 6 | 2 | 2.5 | 3 | 0.08 | 7 | – | 2 | – | 3 | – | – | – | – | 0.1 | 8 | – | 3 | – | 4 | – | – | – | – | 0.15 | – | 9 | – | 3 | – | 5 | – | – | – | – | 0.15 |
| 4 | 4 | 7 | 2 | 2.5 | 3 | 0.08 | 9 | – | 2.5 | 3.5 | 4 | – | – | – | – | 0.1 | 11 | – | 4 | – | 5 | – | – | – | – | 0.15 | – | 12 | – | 4 | – | 6 | – | – | – | – | 0.2 |
| 5 | 5 | 8 | 2 | 2.5 | 3 | 0.08 | 11 | – | 3 | 4 | 5 | – | – | – | – | 0.15 | 13 | – | 4 | – | 6 | 10 | – | – | – | 0.2 | 0.15 | 14 | – | 5 | – | 7 | – | – | – | – | 0.2 |
| 6 | 6 | 10 | 2.5 | 3 | 3.5 | 0.1 | 13 | – | 3.5 | 5 | 6 | – | – | – | – | 0.15 | 15 | – | 5 | – | 7 | 10 | – | – | – | 0.2 | 0.15 | 17 | – | 6 | – | 9 | – | – | – | – | 0.3 |
| 7 | 7 | 11 | 2.5 | 3 | 3.5 | 0.1 | 14 | – | 3.5 | 5 | 6 | – | – | – | – | 0.15 | 17 | – | 5 | – | 7 | 10 | – | – | – | 0.3 | 0.15 | 19 | – | 6 | 8 | 10 | – | – | – | – | 0.3 |
| 8 | 8 | 12 | 2.5 | – | 3.5 | 0.1 | 16 | – | 4 | 5 | 6 | 8 | – | – | – | 0.2 | 19 | – | 6 | – | 9 | 11 | – | – | – | 0.3 | 0.2 | 22 | – | 7 | 9 | 11 | 14 | 19 | 25 | – | 0.3 |
| 9 | 9 | 14 | 3 | – | 4.5 | 0.1 | 17 | – | 4 | 5 | 6 | 8 | – | – | – | 0.2 | 20 | – | 6 | – | 9 | 11 | – | – | – | 0.3 | 0.3 | 24 | – | 7 | 10 | 12 | 15 | 20 | 27 | – | 0.3 |
| 00 | 10 | 15 | 3 | – | 4.5 | 0.1 | 19 | – | 5 | 6 | 7 | 9 | – | – | – | 0.3 | 22 | – | 6 | 8 | 10 | 13 | 16 | 22 | – | 0.3 | 0.3 | 26 | – | 8 | 10 | 12 | 16 | 21 | 29 | – | 0.3 |
| 01 | 12 | 18 | 4 | – | 5 | 0.2 | 21 | – | 5 | 6 | 7 | 9 | – | – | – | 0.3 | 24 | – | 6 | 8 | 10 | 13 | 16 | 22 | – | 0.3 | 0.3 | 28 | 7 | 8 | 10 | 12 | 16 | 21 | 29 | 0.3 | 0.3 |
| 02 | 15 | 21 | 4 | – | 5 | 0.2 | 24 | – | 5 | 6 | 7 | 9 | – | – | – | 0.3 | 28 | – | 7 | 8.5 | 10 | 13 | 18 | 23 | – | 0.3 | 0.3 | 32 | 8 | 9 | 11 | 13 | 17 | 23 | 30 | 0.3 | 0.3 |
| 03 | 17 | 23 | 4 | – | 5 | 0.2 | 26 | – | 5 | 6 | 7 | 9 | – | – | – | 0.3 | 30 | – | 7 | 8.5 | 10 | 13 | 18 | 23 | – | 0.3 | 0.3 | 35 | 8 | 10 | 12 | 14 | 18 | 24 | 32 | 0.3 | 0.3 |
| 04 | 20 | 27 | 4 | – | 5 | 0.2 | 32 | 4 | 7 | 8 | 10 | 12 | 16 | 22 | 0.3 | 0.3 | 37 | 7 | 9 | 11 | 13 | 17 | 23 | 30 | 0.3 | 0.3 | 0.3 | 42 | 8 | 12 | 14 | 16 | 22 | 30 | 40 | 0.3 | 0.6 |
| /22 | 22 | – | – | – | – | – | 34 | 4 | 7 | – | 10 | – | 16 | 22 | 0.3 | 0.3 | 39 | 7 | 9 | 11 | 13 | 17 | 23 | 30 | 0.3 | 0.3 | 0.3 | 44 | 8 | 12 | 14 | 16 | 22 | 30 | 40 | 0.3 | 0.6 |
| 05 | 25 | 32 | 4 | – | 5 | 0.2 | 37 | 4 | 7 | 8 | 10 | 12 | 16 | 22 | 0.3 | 0.3 | 42 | 7 | 9 | 11 | 13 | 17 | 23 | 30 | 0.3 | 0.3 | 0.3 | 47 | 8 | 12 | 14 | 16 | 22 | 30 | 40 | 0.3 | 0.6 |
| /28 | 28 | – | – | – | – | – | 40 | 4 | 7 | – | 10 | – | 16 | 22 | 0.3 | 0.3 | 45 | 7 | 9 | 11 | 13 | 17 | 23 | 30 | 0.3 | 0.3 | 0.3 | 52 | 8 | 12 | 15 | 18 | 24 | 32 | 43 | 0.3 | 0.6 |
| 06 | 30 | 37 | 4 | – | 5 | 0.2 | 42 | 4 | 7 | 8 | 10 | 12 | 16 | 22 | 0.3 | 0.3 | 47 | 7 | 9 | 11 | 13 | 17 | 23 | 30 | 0.3 | 0.3 | 0.3 | 55 | 9 | 13 | 16 | 19 | 25 | 34 | 45 | 0.3 | 1 |
| /32 | 32 | – | – | – | – | – | 44 | 4 | 7 | – | 10 | – | 16 | 22 | 0.3 | 0.3 | 52 | 7 | 10 | 13 | 15 | 20 | 27 | 36 | 0.3 | 0.6 | 0.6 | 58 | 9 | 13 | 16 | 20 | 26 | 35 | 47 | 0.3 | 1 |
| 07 | 35 | – | – | – | – | – | 47 | 4 | 7 | 8 | 10 | 12 | 16 | 22 | 0.3 | 0.3 | 55 | 7 | 10 | 13 | 15 | 20 | 27 | 36 | 0.3 | 0.6 | 0.6 | 62 | 9 | 14 | 17 | 20 | 27 | 36 | 48 | 0.3 | 1 |
| 08 | 40 | – | – | – | – | – | 52 | 4 | 7 | 8 | 10 | 12 | 16 | 22 | 0.3 | 0.3 | 62 | 8 | 12 | 14 | 16 | 22 | 30 | 40 | 0.3 | 0.6 | 0.6 | 68 | 9 | 15 | 18 | 21 | 28 | 38 | 50 | 0.3 | 1 |
| 09 | 45 | – | – | – | – | – | 58 | 4 | 7 | 8 | 10 | 13 | 18 | 23 | 0.3 | 0.3 | 68 | 8 | 12 | 14 | 16 | 22 | 30 | 40 | 0.3 | 0.6 | 0.6 | 75 | 10 | 16 | 19 | 23 | 30 | 40 | 54 | 0.6 | 1 |
| 10 | 50 | – | – | – | – | – | 65 | 5 | 7 | 10 | 12 | 15 | 20 | 27 | 0.3 | 0.3 | 72 | 8 | 12 | 14 | 16 | 22 | 30 | 40 | 0.3 | 0.6 | 0.6 | 80 | 10 | 16 | 19 | 23 | 30 | 40 | 54 | 0.6 | 1 |
| 11 | 55 | – | – | – | – | – | 72 | 7 | 9 | 11 | 13 | 17 | 23 | 30 | 0.3 | 0.3 | 80 | 9 | 13 | 16 | 19 | 25 | 34 | 45 | 0.3 | 1 | 1 | 90 | 11 | 18 | 22 | 26 | 35 | 46 | 63 | 0.6 | 1.1 |
| 12 | 60 | – | – | – | – | – | 78 | 7 | 10 | 12 | 14 | 18 | 24 | 32 | 0.3 | 0.3 | 85 | 9 | 13 | 16 | 19 | 25 | 34 | 45 | 0.3 | 1 | 1 | 95 | 11 | 18 | 22 | 26 | 35 | 46 | 63 | 0.6 | 1.1 |
| 13 | 65 | – | – | – | – | – | 85 | 7 | 10 | 13 | 15 | 20 | 27 | 36 | 0.3 | 0.6 | 90 | 9 | 13 | 16 | 19 | 25 | 34 | 45 | 0.3 | 1 | 1 | 100 | 11 | 18 | 22 | 26 | 35 | 46 | 63 | 0.6 | 1.1 |
| 14 | 70 | – | – | – | – | – | 90 | 8 | 10 | 13 | 15 | 20 | 27 | 36 | 0.3 | 0.6 | 100 | 10 | 16 | 19 | 23 | 30 | 40 | 54 | 0.6 | 1 | 1 | 110 | 13 | 20 | 24 | 30 | 40 | 54 | 71 | 0.6 | 1.1 |
| 15 | 75 | – | – | – | – | – | 95 | 8 | 10 | 13 | 15 | 20 | 27 | 36 | 0.3 | 0.6 | 105 | 10 | 16 | 19 | 23 | 30 | 40 | 54 | 0.6 | 1 | 1 | 115 | 13 | 20 | 24 | 30 | 40 | 54 | 71 | 0.6 | 1.1 |
| 16 | 80 | – | – | – | – | – | 100 | 8 | 10 | 13 | 15 | 20 | 27 | 36 | 0.3 | 0.6 | 110 | 10 | 16 | 19 | 23 | 30 | 40 | 54 | 0.6 | 1 | 1 | 125 | 14 | 22 | 27 | 34 | 45 | 60 | 80 | 0.6 | 1.1 |
| 17 | 85 | – | – | – | – | – | 110 | 9 | 13 | 16 | 19 | 25 | 34 | 45 | 0.3 | 1 | 120 | 11 | 18 | 22 | 26 | 35 | 46 | 63 | 0.6 | 1.1 | 1.1 | 130 | 14 | 22 | 27 | 34 | 45 | 60 | 80 | 0.6 | 1.1 |
| 18 | 90 | – | – | – | – | – | 115 | 9 | 13 | 16 | 19 | 25 | 34 | 45 | 0.3 | 1 | 125 | 11 | 18 | 22 | 26 | 35 | 46 | 63 | 0.6 | 1.1 | 1.1 | 140 | 16 | 24 | 30 | 37 | 50 | 67 | 90 | 1 | 1.5 |
| 19 | 95 | – | – | – | – | – | 120 | 9 | 13 | 16 | 19 | 25 | 34 | 45 | 0.3 | 1 | 130 | 11 | 18 | 22 | 26 | 35 | 46 | 63 | 0.6 | 1.1 | 1.1 | 145 | 16 | 24 | 30 | 37 | 50 | 67 | 90 | 1 | 1.5 |
| 20 | 100 | – | – | – | – | – | 125 | 9 | 13 | 16 | 19 | 25 | 34 | 45 | 0.3 | 1 | 140 | 13 | 20 | 24 | 30 | 40 | 54 | 71 | 0.6 | 1.1 | 1.1 | 150 | 16 | 24 | 30 | 37 | 50 | 67 | 90 | 1 | 1.5 |
| 21 | 105 | – | – | – | – | – | 130 | 9 | 13 | 16 | 19 | 25 | 34 | 45 | 0.3 | 1 | 145 | 13 | 20 | 24 | 30 | 40 | 54 | 71 | 0.6 | 1.1 | 1.1 | 160 | 18 | 26 | 33 | 41 | 56 | 75 | 100 | 1 | 2 |
| 22 | 110 | – | – | – | – | – | 140 | 10 | 16 | 19 | 23 | 30 | 40 | 54 | 0.6 | 1 | 150 | 13 | 20 | 24 | 30 | 40 | 54 | 71 | 0.6 | 1.1 | 1.1 | 170 | 19 | 28 | 36 | 45 | 60 | 80 | 109 | 1 | 2 |
| 24 | 120 | – | – | – | – | – | 150 | 10 | 16 | 19 | 23 | 30 | 40 | 54 | 0.6 | 1 | 165 | 14 | 22 | 27 | 34 | 45 | 60 | 80 | 0.6 | 1.1 | 1.1 | 180 | 19 | 28 | 36 | 46 | 60 | 80 | 109 | 1 | 2 |
| 26 | 130 | – | – | – | – | – | 165 | 11 | 18 | 22 | 26 | 35 | 46 | 63 | 0.6 | 1.1 | 180 | 16 | 24 | 30 | 37 | 50 | 67 | 90 | 1 | 1.5 | 1.5 | 200 | 22 | 33 | 42 | 52 | 69 | 95 | 125 | 1.1 | 2 |
| 28 | 140 | – | – | – | – | – | 175 | 11 | 18 | 22 | 26 | 35 | 46 | 63 | 0.6 | 1.1 | 190 | 16 | 24 | 30 | 37 | 50 | 67 | 90 | 1 | 1.5 | 1.5 | 210 | 22 | 33 | 42 | 53 | 69 | 95 | 125 | 1.1 | 2 |
| 30 | 150 | – | – | – | – | – | 190 | 13 | 20 | 24 | 30 | 40 | 54 | 71 | 0.6 | 1.1 | 210 | 19 | 28 | 36 | 45 | 60 | 80 | 109 | 1 | 2 | 2 | 225 | 24 | 35 | 45 | 56 | 75 | 100 | 136 | 1.1 | 2.1 |
| 32 | 160 | – | – | – | – | – | 200 | 13 | 20 | 24 | 30 | 40 | 54 | 71 | 0.6 | 1.1 | 220 | 19 | 28 | 36 | 45 | 60 | 80 | 109 | 1 | 2 | 2 | 240 | 25 | 38 | 48 | 60 | 80 | 109 | 145 | 1.5 | 2.1 |
| 34 | 170 | – | – | – | – | – | 215 | 14 | 22 | 27 | 34 | 45 | 60 | 80 | 0.6 | 1.1 | 230 | 19 | 28 | 36 | 45 | 60 | 80 | 109 | 1 | 2 | 2 | 260 | 28 | 42 | 54 | 67 | 90 | 122 | 160 | 1.5 | 2.1 |
| 36 | 180 | – | – | – | – | – | 225 | 14 | 22 | 27 | 34 | 45 | 60 | 80 | 0.6 | 1.1 | 250 | 22 | 33 | 42 | 52 | 69 | 95 | 125 | 1.1 | 2 | 2 | 280 | 31 | 46 | 60 | 74 | 100 | 136 | 180 | 2 | 2.1 |
| 38 | 190 | – | – | – | – | – | 240 | 16 | 24 | 30 | 37 | 50 | 67 | 90 | 1 | 1.5 | 260 | 22 | 33 | 42 | 52 | 69 | 95 | 125 | 1.1 | 2 | 2 | 290 | 31 | 46 | 60 | 75 | 100 | 136 | 180 | 2 | 2.1 |
| 40 | 200 | – | – | – | – | – | 250 | 16 | 24 | 30 | 37 | 50 | 67 | 90 | 1 | 1.5 | 280 | 25 | 38 | 48 | 60 | 80 | 109 | 145 | 1.5 | 2.1 | 2.1 | 310 | 34 | 51 | 66 | 82 | 109 | 150 | 200 | 2 | 2.1 |
| 44 | 220 | – | – | – | – | – | 270 | 16 | 24 | 30 | 37 | 50 | 67 | 90 | 1 | 1.5 | 300 | 25 | 38 | 48 | 60 | 80 | 109 | 145 | 1.5 | 2.1 | 2.1 | 340 | 37 | 56 | 72 | 90 | 118 | 160 | 218 | 2.1 | 3 |
| 48 | 240 | – | – | – | – | – | 300 | 19 | 28 | 36 | 45 | 60 | 80 | 109 | 1 | 2 | 320 | 25 | 38 | 48 | 60 | 80 | 109 | 145 | 1.5 | 2.1 | 2.1 | 360 | 37 | 56 | 72 | 92 | 118 | 160 | 218 | 2.1 | 3 |
| 52 | 260 | – | – | – | – | – | 320 | 19 | 28 | 36 | 45 | 60 | 80 | 109 | 1 | 2 | 360 | 31 | 46 | 60 | 75 | 100 | 136 | 180 | 2 | 2.1 | 2.1 | 400 | 44 | 65 | 82 | 104 | 140 | 190 | 250 | 3 | 4 |
| 56 | 280 | – | – | – | – | – | 350 | 22 | 33 | 42 | 52 | 69 | 95 | 125 | 1.1 | 2 | 380 | 31 | 46 | 60 | 75 | 100 | 136 | 180 | 2 | 2.1 | 2.1 | 420 | 44 | 65 | 82 | 106 | 140 | 190 | 250 | 3 | 4 |
| 60 | 300 | – | – | – | – | – | 380 | 25 | 38 | 48 | 60 | 80 | 109 | 145 | 1.5 | 2.1 | 420 | 37 | 56 | 72 | 90 | 118 | 160 | 218 | 2.1 | 3 | 3 | 460 | 50 | 74 | 95 | 118 | 160 | 218 | 290 | 4 | 4 |
| 64 | 320 | – | – | – | – | – | 400 | 25 | 38 | 48 | 60 | 80 | 109 | 145 | 1.5 | 2.1 | 440 | 37 | 56 | 72 | 90 | 118 | 160 | 218 | 2.1 | 3 | 3 | 480 | 50 | 74 | 95 | 121 | 160 | 218 | 290 | 4 | 4 |
| 68 | 340 | – | – | – | – | – | 420 | 25 | 38 | 48 | 60 | 80 | 109 | 145 | 1.5 | 2.1 | 460 | 37 | 56 | 72 | 90 | 118 | 160 | 218 | 2.1 | 3 | 3 | 520 | 57 | 82 | 106 | 133 | 180 | 243 | 325 | 4 | 5 |
| 72 | 360 | – | – | – | – | – | 440 | 25 | 38 | 48 | 60 | 80 | 109 | 145 | 1.5 | 2.1 | 480 | 37 | 56 | 72 | 90 | 118 | 160 | 218 | 2.1 | 3 | 3 | 540 | 57 | 82 | 106 | 134 | 180 | 243 | 325 | 4 | 5 |
| 76 | 380 | – | – | – | – | – | 480 | 31 | 46 | 60 | 75 | 100 | 136 | 180 | 2 | 2.1 | 520 | 44 | 65 | 82 | 106 | 140 | 190 | 250 | 3 | 4 | 4 | 560 | 57 | 82 | 106 | 135 | 180 | 243 | 325 | 4 | 5 |
| 80 | 400 | – | – | – | – | – | 500 | 31 | 46 | 60 | 75 | 100 | 136 | 180 | 2 | 2.1 | 540 | 44 | 65 | 82 | 106 | 140 | 190 | 250 | 3 | 4 | 4 | 600 | 63 | 90 | 118 | 148 | 200 | 272 | 355 | 5 | 5 |
| 84 | 420 | – | – | – | – | – | 520 | 31 | 46 | 60 | 75 | 100 | 136 | 180 | 2 | 2.1 | 560 | 44 | 65 | 82 | 106 | 140 | 190 | 250 | 3 | 4 | 4 | 620 | 63 | 90 | 118 | 150 | 200 | 272 | 355 | 5 | 5 |
| 88 | 440 | – | – | – | – | – | 540 | 31 | 46 | 60 | 75 | 100 | 136 | 180 | 2 | 2.1 | 600 | 50 | 74 | 95 | 118 | 160 | 218 | 290 | 4 | 4 | 4 | 650 | 67 | 94 | 122 | 157 | 212 | 280 | 375 | 5 | 6 |
| 92 | 460 | – | – | – | – | – | 580 | 37 | 56 | 72 | 90 | 118 | 160 | 218 | 2.1 | 3 | 620 | 50 | 74 | 95 | 118 | 160 | 218 | 290 | 4 | 4 | 4 | 680 | 71 | 100 | 128 | 163 | 218 | 300 | 400 | 5 | 6 |
| 96 | 480 | – | – | – | – | – | 600 | 37 | 56 | 72 | 90 | 118 | 160 | 218 | 2.1 | 3 | 650 | 54 | 78 | 100 | 128 | 170 | 230 | 308 | 4 | 5 | 5 | 700 | 71 | 100 | 128 | 165 | 218 | 300 | 400 | 5 | 6 |
| /500 | 500 | – | – | – | – | – | 620 | 37 | 56 | 72 | 90 | 118 | 160 | 218 | 2.1 | 3 | 670 | 54 | 78 | 100 | 128 | 170 | 230 | 308 | 4 | 5 | 5 | 720 | 71 | 100 | 128 | 167 | 218 | 300 | 400 | 5 | 6 |
| /530 | 530 | – | – | – | – | – | 650 | 37 | 56 | 72 | 90 | 118 | 160 | 218 | 2.1 | 3 | 710 | 57 | 82 | 106 | 136 | 180 | 243 | 325 | 4 | 5 | 5 | 780 | 80 | 112 | 145 | 185 | 250 | 335 | 450 | 6 | 6 |
| /560 | 560 | – | – | – | – | – | 680 | 37 | 56 | 72 | 90 | 118 | 160 | 218 | 2.1 | 3 | 750 | 60 | 85 | 112 | 140 | 190 | 258 | 345 | 5 | 5 | 5 | 820 | 82 | 115 | 150 | 195 | 258 | 355 | 462 | 6 | 6 |
| /600 | 600 | – | – | – | – | – | 730 | 42 | 60 | 78 | 98 | 128 | 175 | 236 | 3 | 3 | 800 | 63 | 90 | 118 | 150 | 200 | 272 | 355 | 5 | 5 | 5 | 870 | 85 | 118 | 155 | 200 | 272 | 365 | 488 | 6 | 6 |
| /630 | 630 | – | – | – | – | – | 780 | 48 | 69 | 88 | 112 | 150 | 200 | 272 | 3 | 4 | 850 | 71 | 100 | 128 | 165 | 218 | 300 | 400 | 5 | 6 | 6 | 920 | 92 | 128 | 170 | 212 | 290 | 388 | 515 | 6 | 7.5 |
| /670 | 670 | – | – | – | – | – | 820 | 48 | 69 | 88 | 112 | 150 | 200 | 272 | 3 | 4 | 900 | 73 | 103 | 136 | 170 | 230 | 308 | 412 | 5 | 6 | 6 | 980 | 100 | 136 | 180 | 230 | 308 | 425 | 560 | 6 | 7.5 |
| /710 | 710 | – | – | – | – | – | 870 | 50 | 74 | 95 | 118 | 160 | 218 | 290 | 4 | 4 | 950 | 78 | 106 | 140 | 180 | 243 | 325 | 438 | 5 | 6 | 6 | 1030 | 103 | 140 | 185 | 236 | 315 | 438 | 580 | 6 | 7.5 |
| /750 | 750 | – | – | – | – | – | 920 | 54 | 78 | 100 | 128 | 170 | 230 | 308 | 4 | 5 | 1000 | 80 | 112 | 145 | 185 | 250 | 335 | 450 | 6 | 6 | 6 | 1090 | 109 | 150 | 195 | 250 | 335 | 462 | 615 | 7.5 | 7.5 |
| /800 | 800 | – | – | – | – | – | 980 | 57 | 82 | 106 | 136 | 180 | 243 | 325 | 4 | 5 | 1060 | 82 | 115 | 150 | 195 | 258 | 355 | 462 | 6 | 6 | 6 | 1150 | 112 | 155 | 200 | 258 | 345 | 475 | 630 | 7.5 | 7.5 |
| /850 | 850 | – | – | – | – | – | 1030 | 57 | 82 | 106 | 136 | 180 | 243 | 325 | 4 | 5 | 1120 | 85 | 118 | 155 | 200 | 272 | 365 | 488 | 6 | 6 | 6 | 1220 | 118 | 165 | 212 | 272 | 365 | 500 | 670 | 7.5 | 7.5 |
| /900 | 900 | – | – | – | – | – | 1090 | 60 | 85 | 112 | 140 | 190 | 258 | 345 | 5 | 5 | 1180 | 88 | 122 | 165 | 206 | 280 | 375 | 500 | 6 | 6 | 6 | 1280 | 122 | 170 | 218 | 280 | 375 | 515 | 690 | 7.5 | 7.5 |
| /950 | 950 | – | – | – | – | – | 1150 | 63 | 90 | 118 | 150 | 200 | 272 | 355 | 5 | 5 | 1250 | 95 | 132 | 175 | 224 | 300 | 400 | 545 | 6 | 7.5 | 7.5 | 1360 | 132 | 180 | 236 | 300 | 412 | 560 | 730 | 7.5 | 7.5 |
| /1000 | 1000 | – | – | – | – | – | 1220 | 71 | 100 | 128 | 165 | 218 | 300 | 400 | 5 | 6 | 1320 | 103 | 140 | 185 | 236 | 315 | 438 | 580 | 6 | 7.5 | 7.5 | 1420 | 136 | 185 | 243 | 308 | 412 | 560 | 750 | 7.5 | 7.5 |
| /1060 | 1060 | – | – | – | – | – | 1280 | 71 | 100 | 128 | 165 | 218 | 300 | 400 | 5 | 6 | 1400 | 109 | 150 | 195 | 250 | 335 | 462 | 615 | 7.5 | 7.5 | 7.5 | 1500 | 140 | 195 | 250 | 325 | 438 | 600 | 800 | 9.5 | 9.5 |
| /1120 | 1120 | – | – | – | – | – | 1360 | 78 | 106 | 140 | 180 | 243 | 325 | 438 | 5 | 6 | 1460 | 109 | 150 | 195 | 250 | 335 | 462 | 615 | 7.5 | 7.5 | 7.5 | 1580 | 145 | 200 | 265 | 345 | 462 | 615 | 825 | 9.5 | 9.5 |
| /1180 | 1180 | – | – | – | – | – | 1420 | 78 | 106 | 140 | 180 | 243 | 325 | 438 | 5 | 6 | 1540 | 115 | 160 | 206 | 272 | 355 | 488 | 650 | 7.5 | 7.5 | 7.5 | 1660 | 155 | 212 | 272 | 355 | 475 | 650 | 875 | 9.5 | 9.5 |
| /1250 | 1250 | – | – | – | – | – | 1500 | 80 | 112 | 145 | 185 | 250 | 335 | 450 | 6 | 6 | 1630 | 122 | 170 | 218 | 280 | 375 | 515 | 690 | 7.5 | 7.5 | 7.5 | 1750 | – | 218 | 290 | 375 | 500 | – | – | – | 9.5 |
| /1320 | 1320 | – | – | – | – | – | 1600 | 88 | 122 | 165 | 206 | 280 | 375 | 500 | 6 | 6 | 1720 | 128 | 175 | 230 | 300 | 400 | 545 | 710 | 7.5 | 7.5 | 7.5 | 1850 | – | 230 | 300 | 400 | 530 | – | – | – | 12 |
| /1400 | 1400 | – | – | – | – | – | 1700 | 95 | 132 | 175 | 224 | 300 | 400 | 545 | 6 | 7.5 | 1820 | – | 185 | 243 | 315 | 425 | – | – | – | 9.5 | 9.5 | 1950 | – | 243 | 315 | 412 | 545 | – | – | – | 12 |
| /1500 | 1500 | – | – | – | – | – | 1820 | – | 140 | 185 | 243 | 315 | – | – | – | 7.5 | 1950 | – | 195 | 258 | 335 | 450 | – | – | – | 9.5 | 9.5 | 2120 | – | 272 | 355 | 462 | 615 | – | – | – | 12 |
| /1600 | 1600 | – | – | – | – | – | 1950 | – | 155 | 200 | 265 | 345 | – | – | – | 7.5 | 2060 | – | 200 | 265 | 345 | 462 | – | – | – | 9.5 | 9.5 | 2240 | – | 280 | 365 | 475 | 630 | – | – | – | 12 |
| /1700 | 1700 | – | – | – | – | – | 2060 | – | 160 | 206 | 272 | 355 | – | – | – | 7.5 | 2180 | – | 212 | 280 | 355 | 475 | – | – | – | 9.5 | 9.5 | 2360 | – | 290 | 375 | 500 | 650 | – | – | – | 15 |
| /1800 | 1800 | – | – | – | – | – | 2180 | – | 165 | 218 | 290 | 375 | – | – | – | 9.5 | 2300 | – | 218 | 290 | 375 | 500 | – | – | – | 12 | 12 | 2500 | – | 308 | 400 | 530 | 690 | – | – | – | 15 |
| /1900 | 1900 | – | – | – | – | – | 2300 | – | 175 | 230 | 300 | 400 | – | – | – | 9.5 | 2430 | – | 230 | 308 | 400 | 530 | – | – | – | 12 | 12 | – | – | – | – | – | – | – | – | – | – |
| /2000 | 2000 | – | – | – | – | – | 2430 | – | 190 | 250 | 325 | 425 | – | – | – | 9.5 | – | – | – | – | – | – | – | – | – | – | – | – | – | – | – | – | – | – | – | – | – |

Remarks: 1. Chamfer dimensions r(min) are the smallest allowable

2. The chamfer dimensions given in this table do not necessarily apply to:

(1) the groove side of outer ring with snap ring groove (2) the flangeless side of thin cylindrical roller bearing rings

(3) the front face side of angular contact bearing rings (4) inner rings of bearings with tapered bore

## Table 4.2.2 Boundary Dimensions of Diameter Series 1, 2, 3, and 4

Unit: mm

| | | | | | | | | | | | | | | | | | | | | | | | | | | | | | |
|---|---|---|---|---|---|---|---|---|---|---|---|---|---|---|---|---|---|---|---|---|---|---|---|---|---|---|---|---|---|
| Single row radial ball bearings | | | | | | | | | | | | 62<br>72 | | | | | | | | | | 63<br>73 | | | | | | | |
| Double row radial ball bearings | | | | | | | | | | | | 12 | | | 32<br>52 | | | | | | | 13 | | | 33<br>53 | | | | |
| Cylindrical Roller Bearings | | | | | | | | | | | | N2 | | N22 | | | | | | | | N3 | | N23 | | | | N4 | |
| Spherical Roller Bearings | | | | | 231 | 241 | | | | | | | | 222 | 232 | | | | | | | 213 | | 223 | | | | | |
| Bearing bore diameter Nominal | | Diameter series 1 | | | | | | | | Diameter series 2 | | | | | | | | | Diameter series 3 | | | | | | | | Diameter series 4 | | |
| | | Nominal bearing outside diameter D | Width series | | | | | Chamfer dimensions | | Nominal bearing outside diameter D | Width series | | | | | | Chamfer dimensions | | Nominal bearing outside diameter D | Width series | | | | | Chamfer dimensions | | Nominal bearing outside diameter D | Width series | | Chamfer dimensions |
| | | | 0 | 1 | 2 | 3 | 4 | | | | 8 | 0 | 1 | 2 | 3 | 4 | | | | 8 | 0 | 1 | 2 | 3 | | | | 0 | 2 | |
| | | | Dimension series | | | | | | | | Dimension series | | | | | | | | | Dimension series | | | | | | | | Dimension series | | |
| Bore No. | d | | 01 | 11 | 21 | 31 | 41 | 01 | 11 ~ 41 | | 82 | 02 | 12 | 22 | 32 | 42 | 82 | 02 ~ 42 | | 83 | 03 | 13 | 23 | 33 | 83 | 03 ~ 33 | | 04 | 24 | 04 ~ 24 |
| | | | Width B | | | | | r (min) | | | Width B | | | | | | r (min) | | | Width B | | | | | r (min) | | | Width B | | r (min) |
| /0.6 | 0.6 | – | – | – | – | – | – | – | – | – | – | – | – | – | – | – | – | – | – | – | – | – | – | – | – | – | – | – | – | – |
| 1 | 1 | – | – | – | – | – | – | – | – | – | – | – | – | – | – | – | – | – | – | – | – | – | – | – | – | – | – | – | – | – |
| /1.5 | 1.5 | – | – | – | – | – | – | – | – | – | – | – | – | – | – | – | – | – | – | – | – | – | – | – | – | – | – | – | – | – |
| 2 | 2 | – | – | – | – | – | – | – | – | – | – | – | – | – | – | – | – | – | – | – | – | – | – | – | – | – | – | – | – | – |
| /2.5 | 2.5 | – | – | – | – | – | – | – | – | – | – | – | – | – | – | – | – | – | – | – | – | – | – | – | – | – | – | – | – | – |
| 3 | 3 | – | – | – | – | – | – | – | – | 10 | 2.5 | 4 | – | – | 5 | – | 0.1 | 0.15 | 13 | – | 5 | – | – | 7 | – | 0.2 | – | – | – | – |
| 4 | 4 | – | – | – | – | – | – | – | – | 13 | 3 | 5 | – | – | 7 | – | 0.15 | 0.2 | 16 | – | 5 | – | – | 9 | – | 0.3 | – | – | – | – |
| 5 | 5 | – | – | – | – | – | – | – | – | 16 | 3.5 | 5 | – | – | 8 | – | 0.15 | 0.3 | 19 | – | 6 | – | – | 10 | – | 0.3 | – | – | – | – |
| 6 | 6 | – | – | – | – | – | – | – | – | 19 | 4 | 6 | – | – | 10 | – | 0.2 | 0.3 | 22 | – | 7 | – | 11 | 13 | – | 0.3 | – | – | – | – |
| 7 | 7 | – | – | – | – | – | – | – | – | 22 | 5 | 7 | – | – | 11 | – | 0.3 | 0.3 | 26 | – | 9 | – | 13 | 15 | – | 0.3 | – | – | – | – |
| 8 | 8 | – | – | – | – | – | – | – | – | 24 | 5 | 8 | – | – | 12 | – | 0.3 | 0.3 | 28 | – | 9 | – | 13 | 15 | – | 0.3 | 30 | 10 | 14 | 0.6 |
| 9 | 9 | – | – | – | – | – | – | – | – | 26 | 6 | 8 | – | – | 13 | – | 0.3 | 0.3 | 30 | – | 10 | – | 14 | 16 | – | 0.6 | 32 | 11 | 15 | 0.6 |
| 00 | 10 | – | – | – | – | – | – | – | – | 30 | 7 | 9 | – | 14 | 14.3 | – | 0.3 | 0.6 | 35 | 9 | 11 | – | 17 | 19 | 0.3 | 0.6 | 37 | 12 | 16 | 0.6 |
| 01 | 12 | – | – | – | – | – | – | – | – | 32 | 7 | 10 | – | 14 | 15.9 | – | 0.3 | 0.6 | 37 | 9 | 12 | – | 17 | 19 | 0.3 | 1 | 42 | 13 | 19 | 1 |
| 02 | 15 | – | – | – | – | – | – | – | – | 35 | 8 | 11 | – | 14 | 15.9 | 20 | 0.3 | 0.6 | 42 | 9 | 13 | – | 17 | 19 | 0.3 | 1 | 52 | 15 | 24 | 1.1 |
| 03 | 17 | – | – | – | – | – | – | – | – | 40 | 8 | 12 | – | 16 | 17.5 | 22 | 0.3 | 0.6 | 47 | 10 | 14 | – | 19 | 22.2 | 0.6 | 1 | 62 | 17 | 29 | 1.1 |
| 04 | 20 | – | – | – | – | – | – | – | – | 47 | 9 | 14 | – | 18 | 20.6 | 27 | 0.3 | 1 | 52 | 10 | 15 | – | 21 | 22.2 | 0.6 | 1.1 | 72 | 19 | 33 | 1.1 |
| /22 | 22 | – | – | – | – | – | – | – | – | 50 | 9 | 14 | – | 18 | 20.6 | 27 | 0.3 | 1 | 56 | 11 | 16 | – | 21 | 25 | 0.6 | 1.1 | – | – | – | – |
| 05 | 25 | – | – | – | – | – | – | – | – | 52 | 10 | 15 | – | 18 | 20.6 | 27 | 0.3 | 1 | 62 | 12 | 17 | – | 24 | 25.4 | 0.6 | 1.1 | 80 | 21 | 36 | 1.5 |
| /28 | 28 | – | – | – | – | – | – | – | – | 58 | 10 | 16 | – | 19 | 23 | 30 | 0.6 | 1 | 68 | 13 | 18 | – | 24 | 30 | 0.6 | 1.1 | – | – | – | – |
| 06 | 30 | – | – | – | – | – | – | – | – | 62 | 10 | 16 | – | 20 | 23.8 | 32 | 0.6 | 1 | 72 | 13 | 19 | – | 27 | 30.2 | 0.6 | 1.1 | 90 | 23 | 40 | 1.5 |
| /32 | 32 | – | – | – | – | – | – | – | – | 65 | 11 | 17 | – | 21 | 25 | 33 | 0.6 | 1 | 75 | 14 | 20 | – | 28 | 32 | 0.6 | 1.1 | – | – | – | – |
| 07 | 35 | – | – | – | – | – | – | – | – | 72 | 12 | 17 | – | 23 | 27 | 37 | 0.6 | 1.1 | 80 | 14 | 21 | – | 31 | 34.9 | 0.6 | 1.5 | 100 | 25 | 43 | 1.5 |
| 08 | 40 | – | – | – | – | – | – | – | – | 80 | 13 | 18 | – | 23 | 30.2 | 40 | 0.6 | 1.1 | 90 | 16 | 23 | – | 33 | 36.5 | 1 | 1.5 | 110 | 27 | 46 | 2 |
| 09 | 45 | – | – | – | – | – | – | – | – | 85 | 13 | 19 | – | 23 | 30.2 | 40 | 0.6 | 1.1 | 100 | 17 | 25 | – | 36 | 39.7 | 1 | 1.5 | 120 | 29 | 50 | 2 |
| 10 | 50 | – | – | – | – | – | – | – | – | 90 | 13 | 20 | – | 23 | 30.2 | 40 | 0.6 | 1.1 | 110 | 19 | 27 | – | 40 | 44.4 | 1 | 2 | 130 | 31 | 53 | 2.1 |
| 11 | 55 | – | – | – | – | – | – | – | – | 100 | 14 | 21 | – | 25 | 33.3 | 45 | 0.6 | 1.5 | 120 | 21 | 29 | – | 43 | 49.2 | 1.1 | 2 | 140 | 33 | 57 | 2.1 |
| 12 | 60 | – | – | – | – | – | – | – | – | 110 | 16 | 22 | – | 28 | 36.5 | 50 | 1 | 1.5 | 130 | 22 | 31 | – | 46 | 54 | 1.1 | 2.1 | 150 | 35 | 60 | 2.1 |
| 13 | 65 | – | – | – | – | – | – | – | – | 120 | 18 | 23 | – | 31 | 38.1 | 56 | 1 | 1.5 | 140 | 24 | 33 | – | 48 | 58.7 | 1.1 | 2.1 | 160 | 37 | 64 | 2.1 |
| 14 | 70 | – | – | – | – | – | – | – | – | 125 | 18 | 24 | – | 31 | 39.7 | 56 | 1 | 1.5 | 150 | 25 | 35 | – | 51 | 63.5 | 1.5 | 2.1 | 180 | 42 | 74 | 3 |
| 15 | 75 | – | – | – | – | – | – | – | – | 130 | 18 | 25 | – | 31 | 41.3 | 56 | 1 | 1.5 | 160 | 27 | 37 | – | 55 | 68.3 | 1.5 | 2.1 | 190 | 45 | 77 | 3 |
| 16 | 80 | – | – | – | – | – | – | – | – | 140 | 19 | 26 | – | 33 | 44.4 | 60 | 1 | 2 | 170 | 28 | 39 | – | 58 | 68.3 | 1.5 | 2.1 | 200 | 48 | 80 | 3 |
| 17 | 85 | – | – | – | – | – | – | – | – | 150 | 21 | 28 | – | 36 | 49.2 | 65 | 1.1 | 2 | 180 | 30 | 41 | – | 60 | 73 | 2 | 3 | 210 | 52 | 86 | 4 |
| 18 | 90 | 150 | – | – | – | – | 60 | – | 2 | 160 | 22 | 30 | – | 40 | 52.4 | 69 | 1.1 | 2 | 190 | 30 | 43 | – | 64 | 73 | 2 | 3 | 225 | 54 | 90 | 4 |
| 19 | 95 | 160 | – | – | – | – | 65 | – | 2 | 170 | 24 | 32 | – | 43 | 55.6 | 75 | 1.1 | 2.1 | 200 | 33 | 45 | – | 67 | 77.8 | 2 | 3 | 240 | 55 | 95 | 4 |
| 20 | 100 | 165 | 21 | 30 | 39 | 52 | 65 | 1.1 | 2 | 180 | 25 | 34 | – | 46 | 60.3 | 80 | 1.5 | 2.1 | 215 | 36 | 47 | 51 | 73 | 82.6 | 2.1 | 3 | 250 | 58 | 98 | 4 |
| 21 | 105 | 175 | 22 | 33 | 42 | 56 | 69 | 1.1 | 2 | 190 | 27 | 36 | – | 50 | 65.1 | 85 | 1.5 | 2.1 | 225 | 37 | 49 | 53 | 77 | 87.3 | 2.1 | 3 | 260 | 60 | 100 | 4 |
| 22 | 110 | 180 | 22 | 33 | 42 | 56 | 69 | 1.1 | 2 | 200 | 28 | 38 | – | 53 | 69.8 | 90 | 1.5 | 2.1 | 240 | 42 | 50 | 57 | 80 | 92.1 | 3 | 3 | 280 | 65 | 108 | 4 |
| 24 | 120 | 200 | 25 | 38 | 48 | 62 | 80 | 1.5 | 2 | 215 | – | 40 | 42 | 58 | 76 | 95 | – | 2.1 | 260 | 44 | 55 | 62 | 86 | 106 | 3 | 3 | 310 | 72 | 118 | 5 |
| 26 | 130 | 210 | 25 | 38 | 48 | 64 | 80 | 1.5 | 2 | 230 | – | 40 | 46 | 64 | 80 | 100 | – | 3 | 280 | 48 | 58 | 66 | 93 | 112 | 3 | 4 | 340 | 78 | 128 | 5 |
| 28 | 140 | 225 | 27 | 40 | 50 | 68 | 85 | 1.5 | 2.1 | 250 | – | 42 | 50 | 68 | 88 | 109 | – | 3 | 300 | 50 | 62 | 70 | 102 | 118 | 4 | 4 | 360 | 82 | 132 | 5 |
| 30 | 150 | 250 | 31 | 46 | 60 | 80 | 100 | 2 | 2.1 | 270 | – | 45 | 54 | 73 | 96 | 118 | – | 3 | 320 | – | 65 | 75 | 108 | 128 | – | 4 | 380 | 85 | 138 | 5 |
| 32 | 160 | 270 | 34 | 51 | 66 | 86 | 109 | 2 | 2.1 | 290 | – | 48 | 58 | 80 | 104 | 128 | – | 3 | 340 | – | 68 | 79 | 114 | 136 | – | 4 | 400 | 88 | 142 | 5 |
| 34 | 170 | 280 | 34 | 51 | 66 | 88 | 109 | 2 | 2.1 | 310 | – | 52 | 62 | 86 | 110 | 140 | – | 4 | 360 | – | 72 | 84 | 120 | 140 | – | 4 | 420 | 92 | 145 | 5 |
| 36 | 180 | 300 | 37 | 56 | 72 | 96 | 118 | 2.1 | 3 | 320 | – | 52 | 62 | 86 | 112 | 140 | – | 4 | 380 | – | 75 | 88 | 126 | 150 | – | 4 | 440 | 95 | 150 | 6 |
| 38 | 190 | 320 | 42 | 60 | 78 | 104 | 128 | 3 | 3 | 340 | – | 55 | 65 | 92 | 120 | 150 | – | 4 | 400 | – | 78 | 92 | 132 | 155 | – | 5 | 460 | 98 | 155 | 6 |
| 40 | 200 | 340 | 44 | 65 | 82 | 112 | 140 | 3 | 3 | 360 | – | 58 | 70 | 98 | 128 | 160 | – | 4 | 420 | – | 80 | 97 | 138 | 165 | – | 5 | 480 | 102 | 160 | 6 |
| 44 | 220 | 370 | 48 | 69 | 88 | 120 | 150 | 3 | 4 | 400 | – | 65 | 78 | 108 | 144 | 180 | – | 4 | 460 | – | 88 | 106 | 145 | 180 | – | 5 | 540 | 115 | 180 | 6 |
| 48 | 240 | 400 | 50 | 74 | 95 | 128 | 160 | 4 | 4 | 440 | – | 72 | 85 | 120 | 160 | 200 | – | 4 | 500 | – | 95 | 114 | 155 | 195 | – | 5 | 580 | 122 | 190 | 6 |
| 52 | 260 | 440 | 57 | 82 | 106 | 144 | 180 | 4 | 4 | 480 | – | 80 | 90 | 130 | 174 | 218 | – | 5 | 540 | – | 102 | 123 | 165 | 206 | – | 6 | 620 | 132 | 206 | 7.5 |
| 56 | 280 | 460 | 57 | 82 | 106 | 146 | 180 | 4 | 5 | 500 | – | 80 | 90 | 130 | 176 | 218 | – | 5 | 580 | – | 108 | 132 | 175 | 224 | – | 6 | 670 | 140 | 224 | 7.5 |
| 60 | 300 | 500 | 63 | 90 | 118 | 160 | 200 | 5 | 5 | 540 | – | 85 | 98 | 140 | 192 | 243 | – | 5 | 620 | – | 109 | 140 | 185 | 236 | – | 7.5 | 710 | 150 | 236 | 7.5 |
| 64 | 320 | 540 | 71 | 100 | 128 | 176 | 218 | 5 | 5 | 580 | – | 92 | 105 | 150 | 208 | 258 | – | 5 | 670 | – | 112 | 155 | 200 | 258 | – | 7.5 | 750 | 155 | 250 | 9.5 |
| 68 | 340 | 580 | 78 | 106 | 140 | 190 | 243 | 5 | 5 | 620 | – | 92 | 118 | 165 | 224 | 280 | – | 6 | 710 | – | 118 | 165 | 212 | 272 | – | 7.5 | 800 | 165 | 265 | 9.5 |
| 72 | 360 | 600 | 78 | 106 | 140 | 192 | 243 | 5 | 5 | 650 | – | 95 | 122 | 170 | 232 | 290 | – | 6 | 750 | – | 125 | 170 | 224 | 290 | – | 7.5 | 850 | 180 | 280 | 9.5 |
| 76 | 380 | 620 | 78 | 106 | 140 | 194 | 243 | 5 | 5 | 680 | – | 95 | 132 | 175 | 240 | 300 | – | 6 | 780 | – | 128 | 175 | 230 | 300 | – | 7.5 | 900 | 190 | 300 | 9.5 |
| 80 | 400 | 650 | 80 | 112 | 145 | 200 | 250 | 6 | 6 | 720 | – | 103 | 140 | 185 | 256 | 315 | – | 6 | 820 | – | 136 | 185 | 243 | 308 | – | 7.5 | 950 | 200 | 315 | 12 |
| 84 | 420 | 700 | 88 | 122 | 165 | 224 | 280 | 6 | 6 | 760 | – | 109 | 150 | 195 | 272 | 335 | – | 7.5 | 850 | – | 136 | 190 | 250 | 315 | – | 9.5 | 980 | 206 | 325 | 12 |
| 88 | 440 | 720 | 88 | 122 | 165 | 226 | 280 | 6 | 6 | 790 | – | 112 | 155 | 200 | 280 | 345 | – | 7.5 | 900 | – | 145 | 200 | 265 | 345 | – | 9.5 | 1030 | 212 | 335 | 12 |
| 92 | 460 | 760 | 95 | 132 | 175 | 240 | 300 | 6 | 7.5 | 830 | – | 118 | 165 | 212 | 296 | 365 | – | 7.5 | 950 | – | 155 | 212 | 280 | 365 | – | 9.5 | 1060 | 218 | 345 | 12 |
| 96 | 480 | 790 | 100 | 136 | 180 | 248 | 308 | 6 | 7.5 | 870 | – | 125 | 170 | 224 | 310 | 388 | – | 7.5 | 980 | – | 160 | 218 | 290 | 375 | – | 9.5 | 1120 | 230 | 365 | 15 |
| /500 | 500 | 830 | 106 | 145 | 190 | 264 | 325 | 7.5 | 7.5 | 920 | – | 136 | 185 | 243 | 336 | 412 | – | 7.5 | 1030 | – | 170 | 230 | 300 | 388 | – | 12 | 1150 | 236 | 375 | 15 |
| /530 | 530 | 870 | 109 | 150 | 195 | 272 | 335 | 7.5 | 7.5 | 980 | – | 145 | 200 | 258 | 355 | 450 | – | 9.5 | 1090 | – | 180 | 243 | 325 | 412 | – | 12 | 1220 | 250 | 400 | 15 |
| /560 | 560 | 920 | 115 | 160 | 206 | 280 | 355 | 7.5 | 7.5 | 1030 | – | 150 | 206 | 272 | 365 | 475 | – | 9.5 | 1150 | – | 190 | 258 | 335 | 438 | – | 12 | 1280 | 258 | 412 | 15 |
| /600 | 600 | 980 | 122 | 170 | 218 | 300 | 375 | 7.5 | 7.5 | 1090 | – | 155 | 212 | 280 | 388 | 488 | – | 9.5 | 1220 | – | 200 | 272 | 355 | 462 | – | 15 | 1360 | 272 | 438 | 15 |
| /630 | 630 | 1030 | 128 | 175 | 230 | 315 | 400 | 7.5 | 7.5 | 1150 | – | 165 | 230 | 300 | 412 | 515 | – | 12 | 1280 | – | 206 | 280 | 375 | 488 | – | 15 | 1420 | 280 | 450 | 15 |
| /670 | 670 | 1090 | 136 | 185 | 243 | 336 | 412 | 7.5 | 7.5 | 1220 | – | 175 | 243 | 315 | 438 | 545 | – | 12 | 1360 | – | 218 | 300 | 400 | 515 | – | 15 | 1500 | 290 | 475 | 15 |
| /710 | 710 | 1150 | 140 | 195 | 250 | 345 | 438 | 9.5 | 9.5 | 1280 | – | 180 | 250 | 325 | 450 | 560 | – | 12 | 1420 | – | 224 | 308 | 412 | 530 | – | 15 | – | – | – | – |
| /750 | 750 | 1220 | 150 | 206 | 272 | 365 | 475 | 9.5 | 9.5 | 1360 | – | 195 | 265 | 345 | 475 | 615 | – | 15 | 1500 | – | 236 | 325 | 438 | 560 | – | 15 | – | – | – | – |
| /800 | 800 | 1280 | 155 | 212 | 272 | 375 | 475 | 9.5 | 9.5 | 1420 | – | 200 | 272 | 355 | 488 | 615 | – | 15 | 1600 | – | 258 | 355 | 462 | 600 | – | 15 | – | – | – | – |
| /850 | 850 | 1360 | 165 | 224 | 290 | 400 | 500 | 12 | 12 | 1500 | – | 206 | 280 | 375 | 515 | 650 | – | 15 | 1700 | – | 272 | 375 | 488 | 630 | – | 19 | – | – | – | – |
| /900 | 900 | 1420 | 165 | 230 | 300 | 412 | 515 | 12 | 12 | 1580 | – | 218 | 300 | 388 | 515 | 670 | – | 15 | 1780 | – | 280 | 388 | 500 | 650 | – | 19 | – | – | – | – |
| /950 | 950 | 1500 | 175 | 243 | 315 | 438 | 545 | 12 | 12 | 1660 | – | 230 | 315 | 412 | 530 | 710 | – | 15 | 1850 | – | 290 | 400 | 515 | 670 | – | 19 | – | – | – | – |
| /1000 | 1000 | 1580 | 185 | 258 | 335 | 462 | 580 | 12 | 12 | 1750 | – | 243 | 330 | 425 | 560 | 750 | – | 15 | 1950 | – | 300 | 412 | 545 | 710 | – | 19 | – | – | – | – |
| /1060 | 1060 | 1660 | 190 | 265 | 345 | 475 | 600 | 12 | 15 | – | – | – | – | – | – | – | – | – | – | – | – | – | – | – | – | – | – | – | – | – |
| /1120 | 1120 | 1750 | – | 280 | 365 | 475 | 630 | – | 15 | – | – | – | – | – | – | – | – | – | – | – | – | – | – | – | – | – | – | – | – | – |
| /1180 | 1180 | 1850 | – | 290 | 388 | 500 | 670 | – | 15 | – | – | – | – | – | – | – | – | – | – | – | – | – | – | – | – | – | – | – | – | – |
| /1250 | 1250 | 1950 | – | 308 | 400 | 530 | 710 | – | 15 | – | – | – | – | – | – | – | – | – | – | – | – | – | – | – | – | – | – | – | – | – |
| /1320 | 1320 | 2060 | – | 325 | 425 | 560 | 750 | – | 15 | – | – | – | – | – | – | – | – | – | – | – | – | – | – | – | – | – | – | – | – | – |
| /1400 | 1400 | 2180 | – | 345 | 450 | 580 | 775 | – | 19 | – | – | – | – | – | – | – | – | – | – | – | – | – | – | – | – | – | – | – | – | – |
| /1500 | 1500 | 2300 | – | 355 | 462 | 600 | 800 | – | 19 | – | – | – | – | – | – | – | – | – | – | – | – | – | – | – | – | – | – | – | – | – |
| /1600 | 1600 | – | – | – | – | – | – | – | – | – | – | – | – | – | – | – | – | – | – | – | – | – | – | – | – | – | – | – | – | – |
| /1700 | 1700 | – | – | – | – | – | – | – | – | – | – | – | – | – | – | – | – | – | – | – | – | – | – | – | – | – | – | – | – | – |
| /1800 | 1800 | – | – | – | – | – | – | – | – | – | – | – | – | – | – | – | – | – | – | – | – | – | – | – | – | – | – | – | – | – |
| /1900 | 1900 | – | – | – | – | – | – | – | – | – | – | – | – | – | – | – | – | – | – | – | – | – | – | – | – | – | – | – | – | – |
| /2000 | 2000 | – | – | – | – | – | – | – | – | – | – | – | – | – | – | – | – | – | – | – | – | – | – | – | – | – | – | – | – | – |

Remarks: 1. Chamfer dimensions r(min) are the smallest allowable
2. The chamfer dimensions given in this table do not necessarily apply to:
(1) the groove side of outer ring with snap ring groove
(2) the flangeless side of thin cylindrical roller bearing rings
(3) the front face side of angular contact bearing rings
(4) inner rings of bearings with tapered bore

# 4.3 Boundary Dimensions of Tapered Roller Bearings

**Table 4.3**

Unit: mm

| Tapered Roller Bearings | | 329 | | | | | | 320 | | | | 330 | | | | | 331 | | | | | |
|---|---|---|---|---|---|---|---|---|---|---|---|---|---|---|---|---|---|---|---|---|---|---|
| Bearing bore diameter Nominal | | Diameter series 9 | | | | | | Diameter series 0 | | | | | | | | | Diameter series 1 | | | | | |
| | | Outside diameter | Width series 2 | | | Chamfer dimensions | | Outside diameter | Width series 2 | | | Width series 3 | | | Chamfer dimensions | | Outside diameter | Width series 3 | | | Chamfer dimensions | |
| Bore No. | d | D | B | C | T | Inner ring r (min) | Outer ring r (min) | D | B | C | T | B | C | T | Inner ring r (min) | Outer ring r (min) | D | B | C | T | Inner ring r (min) | Outer ring r (min) |
| 02 | 15 | — | — | — | — | — | — | — | — | — | — | — | — | — | — | — | — | — | — | — | — | — |
| 03 | 17 | — | — | — | — | — | — | — | — | — | — | — | — | — | — | — | — | — | — | — | — | — |
| 04 | 20 | 37 | 12 | 9 | 12 | 0.3 | 0.3 | 42 | 15 | 12 | 15 | — | — | — | 0.6 | 0.6 | — | — | — | — | — | — |
| /22 | 22 | 40 | 12 | 9 | 12 | 0.3 | 0.3 | 44 | 15 | 11.5 | 15 | — | — | — | 0.6 | 0.6 | — | — | — | — | — | — |
| 05 | 25 | 42 | 12 | 9 | 12 | 0.3 | 0.3 | 47 | 15 | 11.5 | 15 | 17 | 14 | 17 | 0.6 | 0.6 | — | — | — | — | — | — |
| /28 | 28 | 45 | 12 | 9 | 12 | 0.3 | 0.3 | 52 | 16 | 12 | 16 | — | — | — | 1 | 1 | — | — | — | — | — | — |
| 06 | 30 | 47 | 12 | 9 | 12 | 0.3 | 0.3 | 55 | 17 | 13 | 17 | 20 | 16 | 20 | 1 | 1 | — | — | — | — | — | — |
| /32 | 32 | 52 | 15 | 10 | 14 | 0.6 | 0.6 | 58 | 17 | 13 | 17 | — | — | — | 1 | 1 | — | — | — | — | — | — |
| 07 | 35 | 55 | 14 | 11.5 | 14 | 0.6 | 0.6 | 62 | 18 | 14 | 18 | 21 | 17 | 21 | 1 | 1 | — | — | — | — | — | — |
| 08 | 40 | 62 | 15 | 12 | 15 | 0.6 | 0.6 | 68 | 19 | 14.5 | 19 | 22 | 18 | 22 | 1 | 1 | 75 | 26 | 20.5 | 26 | 1.5 | 1.5 |
| 09 | 45 | 68 | 15 | 12 | 15 | 0.6 | 0.6 | 75 | 20 | 15.5 | 20 | 24 | 19 | 24 | 1 | 1 | 80 | 26 | 20.5 | 26 | 1.5 | 1.5 |
| 10 | 50 | 72 | 15 | 12 | 15 | 0.6 | 0.6 | 80 | 20 | 15.5 | 20 | 24 | 19 | 24 | 1 | 1 | 85 | 26 | 20 | 26 | 1.5 | 1.5 |
| 11 | 55 | 80 | 17 | 14 | 17 | 1 | 1 | 90 | 23 | 17.5 | 23 | 27 | 21 | 27 | 1.5 | 1.5 | 95 | 30 | 23 | 30 | 1.5 | 1.5 |
| 12 | 60 | 85 | 17 | 14 | 17 | 1 | 1 | 95 | 23 | 17.5 | 23 | 27 | 21 | 27 | 1.5 | 1.5 | 100 | 30 | 23 | 30 | 1.5 | 1.5 |
| 13 | 65 | 90 | 17 | 14 | 17 | 1 | 1 | 100 | 23 | 17.5 | 23 | 27 | 21 | 27 | 1.5 | 1.5 | 110 | 34 | 26.5 | 34 | 1.5 | 1.5 |
| 14 | 70 | 100 | 20 | 16 | 20 | 1 | 1 | 110 | 25 | 19 | 25 | 31 | 25.5 | 31 | 1.5 | 1.5 | 120 | 37 | 29 | 37 | 2 | 1.5 |
| 15 | 75 | 105 | 20 | 16 | 20 | 1 | 1 | 115 | 25 | 19 | 25 | 31 | 25.5 | 31 | 1.5 | 1.5 | 125 | 37 | 29 | 37 | 2 | 1.5 |
| 16 | 80 | 110 | 20 | 16 | 20 | 1 | 1 | 125 | 29 | 22 | 29 | 36 | 29.5 | 36 | 1.5 | 1.5 | 130 | 37 | 29 | 37 | 2 | 1.5 |
| 17 | 85 | 120 | 23 | 18 | 23 | 1.5 | 1.5 | 130 | 29 | 22 | 29 | 36 | 29.5 | 36 | 1.5 | 1.5 | 140 | 41 | 32 | 41 | 2.5 | 2 |
| 18 | 90 | 125 | 23 | 18 | 23 | 1.5 | 1.5 | 140 | 32 | 24 | 32 | 39 | 32.5 | 39 | 2 | 1.5 | 150 | 45 | 35 | 45 | 2.5 | 2 |
| 19 | 95 | 130 | 23 | 18 | 23 | 1.5 | 1.5 | 145 | 32 | 24 | 32 | 39 | 32.5 | 39 | 2 | 1.5 | 160 | 49 | 38 | 49 | 2.5 | 2 |
| 20 | 100 | 140 | 25 | 20 | 25 | 1.5 | 1.5 | 150 | 32 | 24 | 32 | 39 | 32.5 | 39 | 2 | 1.5 | 165 | 52 | 40 | 52 | 2.5 | 2 |
| 21 | 105 | 145 | 25 | 20 | 25 | 1.5 | 1.5 | 160 | 35 | 26 | 35 | 43 | 34 | 43 | 2.5 | 2 | 175 | 56 | 44 | 56 | 2.5 | 2 |
| 22 | 110 | 150 | 25 | 20 | 25 | 1.5 | 1.5 | 170 | 38 | 29 | 38 | 47 | 37 | 47 | 2.5 | 2 | 180 | 56 | 43 | 56 | 2.5 | 2 |
| 24 | 120 | 165 | 29 | 23 | 29 | 1.5 | 1.5 | 180 | 38 | 29 | 38 | 48 | 38 | 48 | 2.5 | 2 | 200 | 62 | 48 | 62 | 2.5 | 2 |
| 26 | 130 | 180 | 32 | 25 | 32 | 2 | 1.5 | 200 | 45 | 34 | 45 | 55 | 43 | 55 | 2.5 | 2 | — | — | — | — | — | — |
| 28 | 140 | 190 | 32 | 25 | 32 | 2 | 1.5 | 210 | 45 | 34 | 45 | 56 | 44 | 56 | 2.5 | 2 | — | — | — | — | — | — |
| 30 | 150 | 210 | 38 | 30 | 38 | 2.5 | 2 | 225 | 48 | 36 | 48 | 59 | 46 | 59 | 3 | 2.5 | — | — | — | — | — | — |
| 32 | 160 | 220 | 38 | 30 | 38 | 2.5 | 2 | 240 | 51 | 38 | 51 | — | — | — | 3 | 2.5 | — | — | — | — | — | — |
| 34 | 170 | 230 | 38 | 30 | 38 | 2.5 | 2 | 260 | 57 | 43 | 57 | — | — | — | 3 | 2.5 | — | — | — | — | — | — |
| 36 | 180 | 250 | 45 | 34 | 45 | 2.5 | 2 | 280 | 64 | 48 | 64 | — | — | — | 3 | 2.5 | — | — | — | — | — | — |
| 38 | 190 | 260 | 45 | 34 | 45 | 2.5 | 2 | 290 | 64 | 48 | 64 | — | — | — | 3 | 2.5 | — | — | — | — | — | — |
| 40 | 200 | 280 | 51 | 39 | 51 | 3 | 2.5 | 310 | 70 | 53 | 70 | — | — | — | 3 | 2.5 | — | — | — | — | — | — |
| 44 | 220 | 300 | 51 | 39 | 51 | 3 | 2.5 | 340 | 76 | 57 | 76 | — | — | — | 4 | 3 | — | — | — | — | — | — |
| 48 | 240 | 320 | 51 | 39 | 51 | 3 | 2.5 | 360 | 76 | 57 | 76 | — | — | — | 4 | 3 | — | — | — | — | — | — |
| 52 | 260 | 360 | 63.5 | 48 | 63.5 | 3 | 2.5 | 400 | 87 | 65 | 87 | — | — | — | 5 | 4 | — | — | — | — | — | — |
| 56 | 280 | 380 | 63.5 | 48 | 63.5 | 3 | 2.5 | 420 | 87 | 65 | 87 | — | — | — | 5 | 4 | — | — | — | — | — | — |
| 60 | 300 | 420 | 76 | 57 | 76 | 4 | 3 | 460 | 100 | 74 | 100 | — | — | — | 5 | 4 | — | — | — | — | — | — |
| 64 | 320 | 440 | 76 | 57 | 76 | 4 | 3 | 480 | 100 | 74 | 100 | — | — | — | 5 | 4 | — | — | — | — | — | — |
| 68 | 340 | 460 | 76 | 57 | 76 | 4 | 3 | — | — | — | — | — | — | — | — | — | — | — | — | — | — | — |
| 72 | 360 | 480 | 76 | 57 | 76 | 4 | 3 | — | — | — | — | — | — | — | — | — | — | — | — | — | — | — |

| Tapered Roller Bearings | | 302 | | | | | | | | | | | | 303 | 303D | | | | 313 | | | 323 | | | | | Tapered Roller Bearings | |
|---|---|---|---|---|---|---|---|---|---|---|---|---|---|---|---|---|---|---|---|---|---|---|---|---|---|---|---|---|
| Bearing bore diameter Nominal | | Diameter series 2 | | | | | | | | | | | | Diameter series 3 | | | | | | | | | | | | | Bearing bore diameter Nominal | |
| | | Outside diameter | Width series 0 | | | | Width series 2 | | | Width series 3 | | | Chamfer dimensions | Outside diameter | Width series 0 | | | | Width series 1 | | | Width series 2 | | | Chamfer dimensions | | | |
| Bore No. | d | D | B | C | T | B | C | T | B | C | T | Inner ring r (min) | Outer ring r (min) | D | B | C | C(1) | T | B | C | T | B | C | T | Inner ring r (min) | Outer ring r (min) | Bore No. | d |
| 02 | 15 | — | — | — | — | — | — | — | — | — | — | — | — | 42 | 13 | 11 | — | 14.25 | — | — | — | — | — | — | 1 | 1 | 02 | 15 |
| 03 | 17 | 40 | 12 | 11 | 13.25 | 16 | 14 | 17.25 | — | — | — | 1 | 1 | 47 | 14 | 12 | — | 15.25 | — | — | — | 19 | 16 | 20.25 | 1 | 1 | 03 | 17 |
| 04 | 20 | 47 | 14 | 12 | 15.25 | 18 | 15 | 19.25 | — | — | — | 1 | 1 | 52 | 15 | 13 | — | 16.25 | — | — | — | 21 | 18 | 22.25 | 1.5 | 1.5 | 04 | 20 |
| /22 | 22 | — | — | — | — | — | — | — | — | — | — | — | — | — | — | — | — | — | — | — | — | — | — | — | — | — | /22 | 22 |
| 05 | 25 | 52 | 15 | 13 | 16.25 | 18 | 16 | 19.25 | 22 | 18 | 22 | 1 | 1 | 62 | 17 | 15 | 13 | 18.25 | — | — | — | 24 | 20 | 25.25 | 1.5 | 1.5 | 05 | 25 |
| /28 | 28 | 58 | — | — | — | 19 | 16 | 20.25 | 24 | 19 | 24 | 1 | 1 | — | — | — | — | — | — | — | — | — | — | — | — | — | /28 | 28 |
| 06 | 30 | 62 | 16 | 14 | 17.25 | 20 | 17 | 21.25 | 25 | 19.5 | 25 | 1 | 1 | 72 | 19 | 16 | 14 | 20.75 | — | — | — | 27 | 23 | 28.75 | 1.5 | 1.5 | 06 | 30 |
| /32 | 32 | 65 | 17 | 15 | 18.25 | 26.5 | 17 | 22 | 26 | 20.5 | 26 | 1 | 1 | 75 | — | — | — | — | — | — | — | 28 | 23 | 29.75 | 1.5 | 1.5 | /32 | 32 |
| 07 | 35 | 72 | 17 | 15 | 18.25 | 23 | 19 | 24.25 | 28 | 22 | 28 | 1.5 | 1.5 | 80 | 21 | 18 | 15 | 22.75 | — | — | — | 31 | 25 | 32.75 | 2 | 1.5 | 07 | 35 |
| 08 | 40 | 80 | 18 | 16 | 19.75 | 23 | 19 | 24.75 | 32 | 25 | 32 | 1.5 | 1.5 | 90 | 23 | 20 | 17 | 25.25 | — | — | — | 33 | 27 | 35.25 | 2 | 1.5 | 08 | 40 |
| 09 | 45 | 85 | 19 | 16 | 20.75 | 23 | 19 | 24.75 | 32 | 25 | 32 | 1.5 | 1.5 | 100 | 25 | 22 | 18 | 27.25 | — | — | — | 36 | 30 | 38.25 | 2 | 1.5 | 09 | 45 |
| 10 | 50 | 90 | 20 | 17 | 21.75 | 23 | 19 | 24.75 | 32 | 24.5 | 32 | 1.5 | 1.5 | 110 | 27 | 23 | 19 | 29.25 | — | — | — | 40 | 33 | 42.25 | 2.5 | 2 | 10 | 50 |
| 11 | 55 | 100 | 21 | 18 | 22.75 | 25 | 21 | 26.75 | 35 | 27 | 35 | 2 | 1.5 | 120 | 29 | 25 | 21 | 31.5 | — | — | — | 43 | 35 | 45.5 | 2.5 | 2 | 11 | 55 |
| 12 | 60 | 110 | 22 | 19 | 23.75 | 28 | 24 | 29.75 | 38 | 29 | 38 | 2 | 1.5 | 130 | 31 | 26 | 22 | 33.5 | — | — | — | 46 | 37 | 48.5 | 3 | 2.5 | 12 | 60 |
| 13 | 65 | 120 | 23 | 20 | 24.75 | 31 | 27 | 32.75 | 41 | 32 | 41 | 2 | 1.5 | 140 | 33 | 28 | 23 | 36 | — | — | — | 48 | 39 | 51 | 3 | 2.5 | 13 | 65 |
| 14 | 70 | 125 | 24 | 21 | 26.25 | 31 | 27 | 33.25 | 41 | 32 | 41 | 2 | 1.5 | 150 | 35 | 30 | 25 | 38 | — | — | — | 51 | 42 | 54 | 3 | 2.5 | 14 | 70 |
| 15 | 75 | 130 | 25 | 22 | 27.25 | 31 | 27 | 33.25 | 41 | 31 | 41 | 2 | 1.5 | 160 | 37 | 31 | 26 | 40 | — | — | — | 55 | 45 | 58 | 3 | 2.5 | 15 | 75 |
| 16 | 80 | 140 | 26 | 22 | 28.25 | 33 | 28 | 35.25 | 46 | 35 | 46 | 2.5 | 2 | 170 | 39 | 33 | 27 | 42.5 | — | — | — | 58 | 48 | 61.5 | 3 | 2.5 | 16 | 80 |
| 17 | 85 | 150 | 28 | 24 | 30.5 | 36 | 30 | 38.5 | 49 | 37 | 49 | 2.5 | 2 | 180 | 41 | 34 | 28 | 44.5 | — | — | — | 60 | 49 | 63.5 | 4 | 3 | 17 | 85 |
| 18 | 90 | 160 | 30 | 26 | 32.5 | 40 | 34 | 42.5 | 55 | 42 | 55 | 2.5 | 2 | 190 | 43 | 36 | 30 | 46.5 | — | — | — | 64 | 53 | 67.5 | 4 | 3 | 18 | 90 |
| 19 | 95 | 170 | 32 | 27 | 34.5 | 43 | 37 | 45.5 | 58 | 44 | 58 | 3 | 2.5 | 200 | 45 | 38 | 32 | 49.5 | — | — | — | 67 | 55 | 71.5 | 4 | 3 | 19 | 95 |
| 20 | 100 | 180 | 34 | 29 | 37 | 46 | 39 | 49 | 63 | 48 | 63 | 3 | 2.5 | 215 | 47 | 39 | — | 51.5 | 51 | 35 | 56.5 | 73 | 60 | 77.5 | 4 | 3 | 20 | 100 |
| 21 | 105 | 190 | 36 | 30 | 39 | 50 | 43 | 53 | 68 | 52 | 68 | 3 | 2.5 | 225 | 49 | 41 | — | 53.5 | 53 | 36 | 58 | 77 | 63 | 81.5 | 4 | 3 | 21 | 105 |
| 22 | 110 | 200 | 38 | 32 | 41 | 53 | 46 | 56 | — | — | — | 3 | 2.5 | 240 | 50 | 42 | — | 54.5 | 57 | 38 | 63 | 80 | 65 | 84.5 | 4 | 3 | 22 | 110 |
| 24 | 120 | 215 | 40 | 34 | 43.5 | 58 | 50 | 61.5 | — | — | — | 3 | 2.5 | 260 | 55 | 46 | — | 59.5 | 62 | 42 | 68 | 86 | 69 | 90.5 | 4 | 3 | 24 | 120 |
| 26 | 130 | 230 | 40 | 34 | 43.75 | 64 | 54 | 67.75 | — | — | — | 4 | 3 | 280 | 58 | 49 | — | 63.75 | 66 | 44 | 72 | — | — | — | 5 | 4 | 26 | 130 |
| 28 | 140 | 250 | 42 | 36 | 45.75 | 68 | 58 | 71.75 | — | — | — | 4 | 3 | 300 | 62 | 53 | — | 67.75 | 70 | 47 | 77 | — | — | — | 5 | 4 | 28 | 140 |
| 30 | 150 | 270 | 45 | 38 | 49 | 73 | 60 | 77 | — | — | — | 4 | 3 | 320 | 65 | 55 | — | 72 | 75 | 50 | 82 | — | — | — | 5 | 4 | 30 | 150 |
| 32 | 160 | 290 | 48 | 40 | 52 | 80 | 67 | 84 | — | — | — | 4 | 3 | 340 | 68 | 58 | — | 75 | — | — | — | — | — | — | 5 | 4 | 32 | 160 |
| 34 | 170 | 310 | 52 | 43 | 57 | 86 | 71 | 91 | — | — | — | 5 | 4 | 360 | 72 | 62 | — | 80 | — | — | — | — | — | — | 5 | 4 | 34 | 170 |
| 36 | 180 | 320 | 52 | 43 | 57 | 86 | 71 | 91 | — | — | — | 5 | 4 | — | — | — | — | — | — | — | — | — | — | — | — | — | 36 | 180 |
| 38 | 190 | 340 | 55 | 46 | 60 | 92 | 75 | 97 | — | — | — | 5 | 4 | — | — | — | — | — | — | — | — | — | — | — | — | — | 38 | 190 |
| 40 | 200 | 360 | 58 | 48 | 64 | 98 | 82 | 104 | — | — | — | 5 | 4 | — | — | — | — | — | — | — | — | — | — | — | — | — | 40 | 200 |
| 44 | 220 | — | — | — | — | — | — | — | — | — | — | — | — | — | — | — | — | — | — | — | — | — | — | — | — | — | 44 | 220 |
| 48 | 240 | — | — | — | — | — | — | — | — | — | — | — | — | — | — | — | — | — | — | — | — | — | — | — | — | — | 48 | 240 |
| 52 | 260 | — | — | — | — | — | — | — | — | — | — | — | — | — | — | — | — | — | — | — | — | — | — | — | — | — | 52 | 260 |
| 56 | 280 | — | — | — | — | — | — | — | — | — | — | — | — | — | — | — | — | — | — | — | — | — | — | — | — | — | 56 | 280 |
| 60 | 300 | — | — | — | — | — | — | — | — | — | — | — | — | — | — | — | — | — | — | — | — | — | — | — | — | — | 60 | 300 |
| 64 | 320 | — | — | — | — | — | — | — | — | — | — | — | — | — | — | — | — | — | — | — | — | — | — | — | — | — | 64 | 320 |
| 68 | 340 | — | — | — | — | — | — | — | — | — | — | — | — | — | — | — | — | — | — | — | — | — | — | — | — | — | 68 | 340 |
| 72 | 360 | — | — | — | — | — | — | — | — | — | — | — | — | — | — | — | — | — | — | — | — | — | — | — | — | — | 72 | 360 |

Remarks: 1. Chamfer dimensions r(min) are the smallest chamfer dimensions allowable
2. Dimensions B, C, T of 32000 and 32200 series bearings without prefix E and suffix J listed on page 225 differ from the above dimensions.

Note: (1) To be applied to 303D series

# 4.4 Boundary Dimensions of Thrust Bearings with Flat Back Face

**Table 4.4**

Unit: mm

| Single-direction Thrust Ball Bearings | | | | | | | | | | | | | | | | | | | | | | | | | | | | | | | | | | | | | | | | | | | | | | | |
|---|---|---|---|---|---|---|---|---|---|---|---|---|---|---|---|---|---|---|---|---|---|---|---|---|---|---|---|---|---|---|---|---|---|---|---|---|---|---|---|---|---|---|---|---|---|---|---|
| Double-direction Thrust Ball Bearings | | | | | | | | | | | | | | | | | | | | | | | | | | | | | | | | | | | | | | | | | | | | | | | |
| Spherical Roller Thrust Bearings | | | | | | | | | | | | | | | | | | | | | | | | | | | | | | | | | | | | | | | | | | | | | | | |
| | | | | | | | | | 511 | | | | | 512 | | | | | | | | | | | 513 | | | | | | | | | 514 | | | | | | | | | | | |
| | | | | | | | | | | | | | | | 522 | | | | | | | | | | | 523 | | | | | | | 294 | | 524 | | | | | | | | | | |
| | | | | | | | | | | | | | 292 | | | | | | | | | | | 293 | | | | | | | | | | | | | | | | | | | | | | |
| Bearing bore diameter Nominal | | Diameter series 0 | | | | | Diameter series 1 | | | | | Diameter series 2 | | | | | | | | | Diameter series 3 | | | | | | | | | Diameter series 4 | | | | | | | | | Diameter series 5 | | | Bearing bore diameter Nominal | |
| | | Nominal bearing outside diameter D | Dimension series | | | Chamfer dimensions r (min) | Nominal bearing outside diameter D | Dimension series | | | Chamfer dimensions r (min) | Nominal bearing outside diameter D | Dimension series | | | | | | Chamfer dimensions | | Nominal bearing outside diameter D | Dimension series | | | | | | Chamfer dimensions | | Nominal bearing outside diameter D | Dimension series | | | | | | Chamfer dimensions | | Nominal bearing outside diameter D | Dimension series 95 | Chamfer dimensions | | |
| | | | 70 | 90 | 10 | | | 71 | 91 | 11 | | | 72 | 92 | 12 | 22 | 22 | | | | | 73 | 93 | 13 | 23 | 23 | | | | | 74 | 94 | 14 | 24 | 24 | | | | | | | | | |
| Bore No. | d | | Height Nominal T | | | | | Height Nominal T | | | | | Height Nominal T | | | | Center washer Bore $d_2$ | Center washer Height B | r (min) | $r_1$ (min) | | Height Nominal T | | | | Center washer Bore $d_2$ | Center washer Height B | r (min) | $r_1$ (min) | | Height Nominal T | | | | Center washer Bore $d_2$ | Center washer Height B | r (min) | $r_1$ (min) | | Height T | r (min) | Bore No. | d |
| 4 | 4 | 12 | 4 | — | 6 | 0.3 | — | — | — | — | — | 16 | 6 | — | 8 | — | — | — | 0.3 | — | 20 | 7 | — | 11 | — | — | — | 0.6 | — | — | — | — | — | — | — | — | — | — | — | — | — | — | 4 | 4 |
| 6 | 6 | 16 | 5 | — | 7 | 0.3 | — | — | — | — | — | 20 | 6 | — | 9 | — | — | — | 0.3 | — | 24 | 8 | — | 12 | — | — | — | 0.6 | — | — | — | — | — | — | — | — | — | — | — | — | — | — | 6 | 6 |
| 8 | 8 | 18 | 5 | — | 7 | 0.3 | — | — | — | — | — | 22 | 6 | — | 9 | — | — | — | 0.3 | — | 26 | 8 | — | 12 | — | — | — | 0.6 | — | — | — | — | — | — | — | — | — | — | — | — | — | — | 8 | 8 |
| 00 | 10 | 20 | 5 | — | 7 | 0.3 | 24 | 6 | — | 9 | 0.3 | 26 | 7 | — | 11 | — | — | — | 0.6 | — | 30 | 9 | — | 14 | — | — | — | 0.6 | — | — | — | — | — | — | — | — | — | — | — | — | — | — | 00 | 10 |
| 01 | 12 | 22 | 5 | — | 7 | 0.3 | 26 | 6 | — | 9 | 0.3 | 28 | 7 | — | 11 | — | — | — | 0.6 | — | 32 | 9 | — | 14 | — | — | — | 0.6 | — | — | — | — | — | — | — | — | — | — | — | — | — | — | 01 | 12 |
| 02 | 15 | 26 | 5 | — | 7 | 0.3 | 28 | 6 | — | 9 | 0.3 | 32 | 8 | — | 12 | 22 | 10 | 5 | 0.6 | 0.3 | 37 | 10 | — | 15 | — | — | — | 0.6 | — | — | — | — | — | — | — | — | — | — | — | — | — | — | 02 | 15 |
| 03 | 17 | 28 | 5 | — | 7 | 0.3 | 30 | 6 | — | 9 | 0.3 | 35 | 8 | — | 12 | — | — | — | 0.6 | — | 40 | 10 | — | 16 | — | — | — | 0.6 | — | — | — | — | — | — | — | — | — | — | — | 52 | 21 | 1 | 03 | 17 |
| 04 | 20 | 32 | 6 | — | 8 | 0.3 | 35 | 7 | — | 10 | 0.3 | 40 | 9 | — | 14 | 26 | 15 | 6 | 0.6 | 0.3 | 47 | 12 | — | 18 | — | — | — | 1 | — | — | — | — | — | — | — | — | — | — | — | 60 | 24 | 1 | 04 | 20 |
| 05 | 25 | 37 | 6 | — | 8 | 0.3 | 42 | 8 | — | 11 | 0.6 | 47 | 10 | — | 15 | 28 | 20 | 7 | 0.6 | 0.3 | 52 | 12 | — | 18 | 34 | 20 | 8 | 1 | 0.3 | 60 | 16 | 21 | 24 | 45 | 15 | 11 | 1 | 0.6 | 73 | 29 | 1.1 | 05 | 25 |
| 06 | 30 | 42 | 6 | — | 8 | 0.3 | 47 | 8 | — | 11 | 0.6 | 52 | 10 | — | 16 | 29 | 25 | 7 | 0.6 | 0.3 | 60 | 14 | — | 21 | 38 | 25 | 9 | 1 | 0.3 | 70 | 18 | 24 | 28 | 52 | 20 | 12 | 1 | 0.6 | 85 | 34 | 1.1 | 06 | 30 |
| 07 | 35 | 47 | 6 | — | 8 | 0.3 | 52 | 8 | — | 12 | 0.6 | 62 | 12 | — | 18 | 34 | 30 | 8 | 1 | 0.3 | 68 | 15 | — | 24 | 44 | 30 | 10 | 1 | 0.3 | 80 | 20 | 27 | 32 | 59 | 25 | 14 | 1.1 | 0.6 | 100 | 39 | 1.1 | 07 | 35 |
| 08 | 40 | 52 | 6 | — | 9 | 0.3 | 60 | 9 | — | 13 | 0.6 | 68 | 13 | — | 19 | 36 | 30 | 9 | 1 | 0.6 | 78 | 17 | 22 | 26 | 49 | 30 | 12 | 1 | 0.6 | 90 | 23 | 30 | 36 | 65 | 30 | 15 | 1.1 | 0.6 | 110 | 42 | 1.5 | 08 | 40 |
| 09 | 45 | 60 | 7 | — | 10 | 0.3 | 65 | 9 | — | 14 | 0.6 | 73 | 13 | — | 20 | 37 | 35 | 9 | 1 | 0.6 | 85 | 18 | 24 | 28 | 52 | 35 | 12 | 1 | 0.6 | 100 | 25 | 34 | 39 | 72 | 35 | 17 | 1.1 | 0.6 | 120 | 45 | 2 | 09 | 45 |
| 10 | 50 | 65 | 7 | — | 10 | 0.3 | 70 | 9 | — | 14 | 0.6 | 78 | 13 | — | 22 | 39 | 40 | 9 | 1 | 0.6 | 95 | 20 | 27 | 31 | 58 | 40 | 14 | 1.1 | 0.6 | 110 | 27 | 36 | 43 | 78 | 40 | 18 | 1.5 | 0.6 | 135 | 51 | 2 | 10 | 50 |
| 11 | 55 | 70 | 7 | — | 10 | 0.3 | 78 | 10 | — | 16 | 0.6 | 90 | 16 | 21 | 25 | 45 | 45 | 10 | 1 | 0.6 | 105 | 23 | 30 | 35 | 64 | 45 | 15 | 1.1 | 0.6 | 120 | 29 | 39 | 48 | 87 | 45 | 20 | 1.5 | 0.6 | 150 | 58 | 2.1 | 11 | 55 |
| 12 | 60 | 75 | 7 | — | 10 | 0.3 | 85 | 11 | — | 17 | 1 | 95 | 16 | 21 | 26 | 46 | 50 | 10 | 1 | 0.6 | 110 | 23 | 30 | 35 | 64 | 50 | 15 | 1.1 | 0.6 | 130 | 32 | 42 | 51 | 93 | 50 | 21 | 1.5 | 0.6 | 160 | 60 | 2.1 | 12 | 60 |
| 13 | 65 | 80 | 7 | — | 10 | 0.3 | 90 | 11 | — | 18 | 1 | 100 | 16 | 21 | 27 | 47 | 55 | 10 | 1 | 0.6 | 115 | 23 | 30 | 36 | 65 | 55 | 15 | 1.1 | 0.6 | 140 | 34 | 45 | 56 | 101 | 50 | 23 | 2 | 1 | 170 | 63 | 2.1 | 13 | 65 |
| 14 | 70 | 85 | 7 | — | 10 | 0.3 | 95 | 11 | — | 18 | 1 | 105 | 16 | 21 | 27 | 47 | 55 | 10 | 1 | 1 | 125 | 25 | 34 | 40 | 72 | 55 | 16 | 1.1 | 1 | 150 | 36 | 48 | 60 | 107 | 55 | 24 | 2 | 1 | 180 | 67 | 3 | 14 | 70 |
| 15 | 75 | 90 | 7 | — | 10 | 0.3 | 100 | 11 | — | 19 | 1 | 110 | 16 | 21 | 27 | 47 | 60 | 10 | 1 | 1 | 135 | 27 | 36 | 44 | 79 | 60 | 18 | 1.5 | 1 | 160 | 38 | 51 | 65 | 115 | 60 | 26 | 2 | 1 | 190 | 69 | 3 | 15 | 75 |
| 16 | 80 | 95 | 7 | — | 10 | 0.3 | 105 | 11 | — | 19 | 1 | 115 | 16 | 21 | 28 | 48 | 65 | 10 | 1 | 1 | 140 | 27 | 36 | 44 | 79 | 65 | 18 | 1.5 | 1 | 170 | 41 | 54 | 68 | 120 | 65 | 27 | 2.1 | 1 | 200 | 73 | 3 | 16 | 80 |
| 17 | 85 | 100 | 7 | — | 10 | 0.3 | 110 | 11 | — | 19 | 1 | 125 | 18 | 24 | 31 | 55 | 70 | 12 | 1 | 1 | 150 | 29 | 39 | 49 | 87 | 70 | 19 | 1.5 | 1 | 180 | 42 | 58 | 72 | 128 | 65 | 29 | 2.1 | 1.1 | 215 | 78 | 4 | 17 | 85 |
| 18 | 90 | 105 | 7 | — | 10 | 0.3 | 120 | 14 | — | 22 | 1 | 135 | 20 | 27 | 35 | 62 | 75 | 14 | 1.1 | 1 | 155 | 29 | 39 | 50 | 88 | 75 | 19 | 1.5 | 1 | 190 | 45 | 60 | 77 | 135 | 70 | 30 | 2.1 | 1.1 | 225 | 82 | 4 | 18 | 90 |
| 20 | 100 | 120 | 9 | — | 14 | 0.6 | 135 | 16 | 21 | 25 | 1 | 150 | 23 | 30 | 38 | 67 | 85 | 15 | 1.1 | 1 | 170 | 32 | 42 | 55 | 97 | 85 | 21 | 1.5 | 1 | 210 | 50 | 67 | 85 | 150 | 80 | 33 | 3 | 1.1 | 250 | 90 | 4 | 20 | 100 |
| 22 | 110 | 130 | 9 | — | 14 | 0.6 | 145 | 16 | 21 | 25 | 1 | 160 | 23 | 30 | 38 | 67 | 95 | 15 | 1.1 | 1 | 190 | 36 | 48 | 63 | 110 | 95 | 24 | 2 | 1 | 230 | 54 | 73 | 95 | 166 | 90 | 37 | 3 | 1.1 | 270 | 95 | 5 | 22 | 110 |
| 24 | 120 | 140 | 9 | — | 14 | 0.6 | 155 | 16 | 21 | 25 | 1 | 170 | 23 | 30 | 39 | 68 | 100 | 15 | 1.1 | 1.1 | 210 | 41 | 54 | 70 | 123 | 100 | 27 | 2.1 | 1.1 | 250 | 58 | 78 | 102 | 177 | 95 | 40 | 4 | 1.5 | 300 | 109 | 5 | 24 | 120 |
| 26 | 130 | 150 | 9 | — | 14 | 0.6 | 170 | 18 | 24 | 30 | 1 | 190 | 27 | 36 | 45 | 80 | 110 | 18 | 1.5 | 1.1 | 225 | 42 | 58 | 75 | 130 | 110 | 30 | 2.1 | 1.1 | 270 | 63 | 85 | 110 | 192 | 100 | 42 | 4 | 2 | 320 | 115 | 5 | 26 | 130 |
| 28 | 140 | 160 | 9 | — | 14 | 0.6 | 180 | 18 | 24 | 31 | 1 | 200 | 27 | 36 | 46 | 81 | 120 | 18 | 1.5 | 1.1 | 240 | 45 | 60 | 80 | 140 | 120 | 31 | 2.1 | 1.1 | 280 | 63 | 85 | 112 | 196 | 110 | 44 | 4 | 2 | 340 | 122 | 5 | 28 | 140 |
| 30 | 150 | 170 | 9 | — | 14 | 0.6 | 190 | 18 | 24 | 31 | 1 | 215 | 29 | 39 | 50 | 89 | 130 | 20 | 1.5 | 1.1 | 250 | 45 | 60 | 80 | 140 | 130 | 31 | 2.1 | 1.1 | 300 | 67 | 90 | 120 | 209 | 120 | 46 | 4 | 2 | 360 | 125 | 6 | 30 | 150 |
| 32 | 160 | 180 | 9 | — | 14 | 0.6 | 200 | 18 | 24 | 31 | 1 | 225 | 29 | 39 | 51 | 90 | 140 | 20 | 1.5 | 1.1 | 270 | 50 | 67 | 87 | 153 | 140 | 33 | 3 | 1.1 | 320 | 73 | 95 | 130 | 226 | 130 | 50 | 5 | 2 | 380 | 132 | 6 | 32 | 160 |
| 34 | 170 | 190 | 9 | — | 14 | 0.6 | 215 | 20 | 27 | 34 | 1.1 | 240 | 32 | 42 | 55 | 97 | 150 | 21 | 1.5 | 1.1 | 280 | 50 | 67 | 87 | 153 | 150 | 33 | 3 | 1.1 | 340 | 78 | 103 | 135 | 236 | 135 | 50 | 5 | 2.1 | 400 | 140 | 6 | 34 | 170 |
| 36 | 180 | 200 | 9 | — | 14 | 0.6 | 225 | 20 | 27 | 34 | 1.1 | 250 | 32 | 42 | 56 | 98 | 150 | 21 | 1.5 | 2 | 300 | 54 | 73 | 95 | 165 | 150 | 37 | 3 | 2 | 360 | 82 | 109 | 140 | 245 | 140 | 52 | 5 | 3 | 420 | 145 | 6 | 36 | 180 |
| 38 | 190 | 215 | 11 | — | 17 | 1 | 240 | 23 | 30 | 37 | 1.1 | 270 | 36 | 48 | 62 | 109 | 160 | 24 | 2 | 2 | 320 | 58 | 78 | 105 | 183 | 160 | 40 | 4 | 2 | 380 | 85 | 115 | 150 | — | — | — | 5 | — | 440 | 150 | 6 | 38 | 190 |
| 40 | 200 | 225 | 11 | — | 17 | 1 | 250 | 23 | 30 | 37 | 1.1 | 280 | 36 | 48 | 62 | 109 | 170 | 24 | 2 | 2 | 340 | 63 | 85 | 110 | 192 | 170 | 42 | 4 | 2 | 400 | 90 | 122 | 155 | — | — | — | 5 | — | 460 | 155 | 7.5 | 40 | 200 |
| 44 | 220 | 250 | 14 | — | 22 | 1 | 270 | 23 | 30 | 37 | 1.1 | 300 | 36 | 48 | 63 | 110 | 190 | 24 | 2 | 2 | 360 | 63 | 85 | 112 | — | — | — | 4 | — | 420 | 90 | 122 | 160 | — | — | — | 6 | — | 500 | 170 | 7.5 | 44 | 220 |
| 48 | 240 | 270 | 14 | — | 22 | 1 | 300 | 27 | 36 | 45 | 1.5 | 340 | 45 | 60 | 78 | — | — | — | 2.1 | — | 380 | 63 | 85 | 112 | — | — | — | 4 | — | 440 | 90 | 122 | 160 | — | — | — | 6 | — | 540 | 180 | 7.5 | 48 | 240 |
| 52 | 260 | 290 | 14 | — | 22 | 1 | 320 | 27 | 36 | 45 | 1.5 | 360 | 45 | 60 | 79 | — | — | — | 2.1 | — | 420 | 73 | 95 | 130 | — | — | — | 5 | — | 480 | 100 | 132 | 175 | — | — | — | 6 | — | 580 | 190 | 9.5 | 52 | 260 |
| 56 | 280 | 310 | 14 | — | 22 | 1 | 350 | 32 | 42 | 53 | 1.5 | 380 | 45 | 60 | 80 | — | — | — | 2.1 | — | 440 | 73 | 95 | 130 | — | — | — | 5 | — | 520 | 109 | 145 | 190 | — | — | — | 6 | — | 620 | 206 | 9.5 | 56 | 280 |
| 60 | 300 | 340 | 18 | 24 | 30 | 1 | 380 | 36 | 48 | 62 | 2 | 420 | 54 | 73 | 95 | — | — | — | 3 | — | 480 | 82 | 109 | 140 | — | — | — | 5 | — | 540 | 109 | 145 | 190 | — | — | — | 6 | — | 670 | 224 | 9.5 | 60 | 300 |
| 64 | 320 | 360 | 18 | 24 | 30 | 1 | 400 | 36 | 48 | 63 | 2 | 440 | 54 | 73 | 95 | — | — | — | 3 | — | 500 | 82 | 109 | 140 | — | — | — | 5 | — | 580 | 118 | 155 | 205 | — | — | — | 7.5 | — | 710 | 236 | 9.5 | 64 | 320 |
| 68 | 340 | 380 | 18 | 24 | 30 | 1 | 420 | 36 | 48 | 64 | 2 | 460 | 54 | 73 | 96 | — | — | — | 3 | — | 540 | 90 | 122 | 160 | — | — | — | 5 | — | 620 | 125 | 170 | 220 | — | — | — | 7.5 | — | 750 | 243 | 12 | 68 | 340 |
| 72 | 360 | 400 | 18 | 24 | 30 | 1 | 440 | 36 | 48 | 65 | 2 | 500 | 63 | 85 | 110 | — | — | — | 4 | — | 560 | 90 | 122 | 160 | — | — | — | 5 | — | 640 | 125 | 170 | 220 | — | — | — | 7.5 | — | 780 | 250 | 12 | 72 | 360 |
| 76 | 380 | 420 | 18 | 24 | 30 | 1 | 460 | 36 | 48 | 65 | 2 | 520 | 63 | 85 | 112 | — | — | — | 4 | — | 600 | 100 | 132 | 175 | — | — | — | 6 | — | 670 | 132 | 175 | 224 | — | — | — | 7.5 | — | 820 | 265 | 12 | 76 | 380 |
| 80 | 400 | 440 | 18 | 24 | 30 | 1 | 480 | 36 | 48 | 65 | 2 | 540 | 63 | 85 | 112 | — | — | — | 4 | — | 620 | 100 | 132 | 175 | — | — | — | 6 | — | 710 | 140 | 185 | 243 | — | — | — | 7.5 | — | 850 | 272 | 12 | 80 | 400 |
| 84 | 420 | 460 | 18 | 24 | 30 | 1 | 500 | 36 | 48 | 65 | 2 | 580 | 73 | 95 | 130 | — | — | — | 5 | — | 650 | 103 | 140 | 180 | — | — | — | 6 | — | 730 | 140 | 185 | 243 | — | — | — | 7.5 | — | 900 | 290 | 15 | 84 | 420 |
| 88 | 440 | 480 | 18 | 24 | 30 | 1 | 540 | 45 | 60 | 80 | 2.1 | 600 | 73 | 95 | 130 | — | — | — | 5 | — | 680 | 109 | 145 | 190 | — | — | — | 6 | — | 780 | 155 | 206 | 265 | — | — | — | 9.5 | — | 950 | 308 | 15 | 88 | 440 |
| 92 | 460 | 500 | 18 | 24 | 30 | 1 | 560 | 45 | 60 | 80 | 2.1 | 620 | 73 | 95 | 130 | — | — | — | 5 | — | 710 | 112 | 150 | 195 | — | — | — | 6 | — | 800 | 155 | 206 | 265 | — | — | — | 9.5 | — | 980 | 315 | 15 | 92 | 460 |
| 96 | 480 | 520 | 18 | 24 | 30 | 1 | 580 | 45 | 60 | 80 | 2.1 | 650 | 78 | 103 | 135 | — | — | — | 5 | — | 730 | 112 | 150 | 195 | — | — | — | 6 | — | 850 | 165 | 224 | 290 | — | — | — | 9.5 | — | 1000 | 315 | 15 | 96 | 480 |
| /500 | 500 | 540 | 18 | 24 | 30 | 1 | 600 | 45 | 60 | 80 | 2.1 | 670 | 78 | 103 | 135 | — | — | — | 5 | — | 750 | 112 | 150 | 195 | — | — | — | 6 | — | 870 | 165 | 224 | 290 | — | — | — | 9.5 | — | 1060 | 335 | 15 | /500 | 500 |
| /530 | 530 | 580 | 23 | 30 | 38 | 1.1 | 640 | 50 | 67 | 85 | 3 | 710 | 82 | 109 | 140 | — | — | — | 5 | — | 800 | 122 | 160 | 212 | — | — | — | 7.5 | — | 920 | 175 | 236 | 308 | — | — | — | 9.5 | — | 1090 | 335 | 15 | /530 | 530 |
| /560 | 560 | 610 | 23 | 30 | 38 | 1.1 | 670 | 50 | 67 | 85 | 3 | 750 | 85 | 115 | 150 | — | — | — | 5 | — | 850 | 132 | 175 | 224 | — | — | — | 7.5 | — | 980 | 190 | 250 | 335 | — | — | — | 12 | — | 1150 | 355 | 15 | /560 | 560 |
| /600 | 600 | 650 | 23 | 30 | 38 | 1.1 | 710 | 50 | 67 | 85 | 3 | 800 | 90 | 122 | 160 | — | — | — | 5 | — | 900 | 136 | 180 | 236 | — | — | — | 7.5 | — | 1030 | 195 | 258 | 335 | — | — | — | 12 | — | 1220 | 375 | 15 | /600 | 600 |
| /630 | 630 | 680 | 23 | 30 | 38 | 1.1 | 750 | 54 | 73 | 95 | 3 | 850 | 100 | 132 | 175 | — | — | — | 6 | — | 950 | 145 | 190 | 250 | — | — | — | 9.5 | — | 1090 | 206 | 280 | 365 | — | — | — | 12 | — | 1280 | 388 | 15 | /630 | 630 |
| /670 | 670 | 730 | 27 | 36 | 45 | 1.5 | 800 | 58 | 78 | 105 | 4 | 900 | 103 | 140 | 180 | — | — | — | 6 | — | 1000 | 150 | 200 | 258 | — | — | — | 9.5 | — | 1150 | 218 | 290 | 375 | — | — | — | 15 | — | 1320 | 388 | 15 | /670 | 670 |
| /710 | 710 | 780 | 32 | 42 | 53 | 1.5 | 850 | 63 | 85 | 112 | 4 | 950 | 109 | 145 | 190 | — | — | — | 6 | — | 1060 | 160 | 212 | 272 | — | — | — | 9.5 | — | 1220 | 230 | 308 | 400 | — | — | — | 15 | — | 1400 | 412 | 15 | /710 | 710 |
| /750 | 750 | 820 | 32 | 42 | 53 | 1.5 | 900 | 67 | 90 | 120 | 4 | 1000 | 112 | 150 | 195 | — | — | — | 6 | — | 1120 | 165 | 224 | 290 | — | — | — | 9.5 | — | 1280 | 236 | 315 | 412 | — | — | — | 15 | — | — | — | — | /750 | 750 |
| /800 | 800 | 870 | 32 | 42 | 53 | 1.5 | 950 | 67 | 90 | 120 | 4 | 1060 | 118 | 155 | 205 | — | — | — | 7.5 | — | 1180 | 170 | 230 | 300 | — | — | — | 9.5 | — | 1360 | 250 | 335 | 438 | — | — | — | 15 | — | — | — | — | /800 | 800 |
| /850 | 850 | 920 | 32 | 42 | 53 | 1.5 | 1000 | 67 | 90 | 120 | 4 | 1120 | 122 | 160 | 212 | — | — | — | 7.5 | — | 1250 | 180 | 243 | 315 | — | — | — | 12 | — | 1440 | — | 354 | — | — | — | — | 15 | — | — | — | — | /850 | 850 |
| /900 | 900 | 980 | 36 | 48 | 63 | 2 | 1060 | 73 | 95 | 130 | 5 | 1180 | 125 | 170 | 220 | — | — | — | 7.5 | — | 1320 | 190 | 250 | 335 | — | — | — | 12 | — | 1520 | — | 372 | — | — | — | — | 15 | — | — | — | — | /900 | 900 |
| /950 | 950 | 1030 | 36 | 48 | 63 | 2 | 1120 | 78 | 103 | 135 | 5 | 1250 | 136 | 180 | 236 | — | — | — | 7.5 | — | 1400 | 200 | 272 | 355 | — | — | — | 12 | — | 1600 | — | 390 | — | — | — | — | 15 | — | — | — | — | /950 | 950 |
| /1000 | 1000 | 1090 | 41 | 54 | 70 | 2.1 | 1180 | 82 | 109 | 140 | 5 | 1320 | 145 | 190 | 250 | — | — | — | 9.5 | — | 1460 | — | 276 | — | — | — | — | 12 | — | 1670 | — | 402 | — | — | — | — | 15 | — | — | — | — | /1000 | 1000 |
| /1060 | 1060 | 1150 | 41 | 54 | 70 | 2.1 | 1250 | 85 | 115 | 150 | 5 | 1400 | 155 | 206 | 265 | — | — | — | 9.5 | — | 1540 | — | 288 | — | — | — | — | 15 | — | 1770 | — | 426 | — | — | — | — | 15 | — | — | — | — | /1060 | 1060 |
| /1120 | 1120 | 1220 | 45 | 60 | 80 | 2.1 | 1320 | 90 | 122 | 160 | 5 | 1460 | — | 206 | — | — | — | — | 9.5 | — | 1630 | — | 306 | — | — | — | — | 15 | — | 1860 | — | 444 | — | — | — | — | 15 | — | — | — | — | /1120 | 1120 |
| /1180 | 1180 | 1280 | 45 | 60 | 80 | 2.1 | 1400 | 100 | 132 | 175 | 6 | 1520 | — | 206 | — | — | — | — | 9.5 | — | 1710 | — | 318 | — | — | — | — | 15 | — | 1950 | — | 462 | — | — | — | — | 19 | — | — | — | — | /1180 | 1180 |
| /1250 | 1250 | 1360 | 50 | 67 | 85 | 3 | 1460 | — | — | 175 | 6 | 1610 | — | 216 | — | — | — | — | 9.5 | — | 1800 | — | 330 | — | — | — | — | 15 | — | 2050 | — | 480 | — | — | — | — | 19 | — | — | — | — | /1250 | 1250 |
| /1320 | 1320 | 1440 | — | — | 95 | 3 | 1540 | — | — | 175 | 6 | 1700 | — | 228 | — | — | — | — | 9.5 | — | 1900 | — | 348 | — | — | — | — | 19 | — | 2160 | — | 505 | — | — | — | — | 19 | — | — | — | — | /1320 | 1320 |
| /1400 | 1400 | 1520 | — | — | 95 | 3 | 1630 | — | — | 180 | 6 | 1760 | — | 234 | — | — | — | — | 12 | — | 2000 | — | 360 | — | — | — | — | 19 | — | 2280 | — | 530 | — | — | — | — | 19 | — | — | — | — | /1400 | 1400 |
| /1500 | 1500 | 1630 | — | — | 105 | 4 | 1750 | — | — | 195 | 6 | 1920 | — | 252 | — | — | — | — | 12 | — | 2140 | — | 384 | — | — | — | — | 19 | — | — | — | — | — | — | — | — | — | — | — | — | — | /1500 | 1500 |
| /1600 | 1600 | 1730 | — | — | 105 | 4 | 1850 | — | — | 195 | 6 | 2040 | — | 264 | — | — | — | — | 15 | — | 2270 | — | 402 | — | — | — | — | 19 | — | — | — | — | — | — | — | — | — | — | — | — | — | /1600 | 1600 |
| /1700 | 1700 | 1840 | — | — | 112 | 4 | 1970 | — | — | 212 | 7.5 | 2160 | — | 276 | — | — | — | — | 15 | — | — | — | — | — | — | — | — | — | — | — | — | — | — | — | — | — | — | — | — | — | — | /1700 | 1700 |
| /1800 | 1800 | 1950 | — | — | 120 | 4 | 2080 | — | — | 220 | 7.5 | 2280 | — | 280 | — | — | — | — | 15 | — | — | — | — | — | — | — | — | — | — | — | — | — | — | — | — | — | — | — | — | — | — | /1800 | 1800 |
| /1900 | 1900 | 2060 | — | — | 130 | 5 | 2180 | — | — | 220 | 7.5 | — | — | — | — | — | — | — | — | — | — | — | — | — | — | — | — | — | — | — | — | — | — | — | — | — | — | — | — | — | — | /1900 | 1900 |
| /2000 | 2000 | 2160 | — | — | 130 | 5 | 2300 | — | — | 236 | 7.5 | — | — | — | — | — | — | — | — | — | — | — | — | — | — | — | — | — | — | — | — | — | — | — | — | — | — | — | — | — | — | /2000 | 2000 |
| /2120 | 2120 | 2300 | — | — | 140 | 5 | 2430 | — | — | 243 | 7.5 | — | — | — | — | — | — | — | — | — | — | — | — | — | — | — | — | — | — | — | — | — | — | — | — | — | — | — | — | — | — | /2120 | 2120 |
| /2240 | 2240 | 2430 | — | — | 150 | 5 | 2570 | — | — | 258 | 9.5 | — | — | — | — | — | — | — | — | — | — | — | — | — | — | — | — | — | — | — | — | — | — | — | — | — | — | — | — | — | — | /2240 | 2240 |
| /2360 | 2360 | 2550 | — | — | 150 | 5 | 2700 | — | — | 265 | 9.5 | — | — | — | — | — | — | — | — | — | — | — | — | — | — | — | — | — | — | — | — | — | — | — | — | — | — | — | — | — | — | /2360 | 2360 |
| /2500 | 2500 | 2700 | — | — | 160 | 5 | 2850 | — | — | 272 | 9.5 | — | — | — | — | — | — | — | — | — | — | — | — | — | — | — | — | — | — | — | — | — | — | — | — | — | — | — | — | — | — | /2500 | 2500 |

Remark: Chamfer dimensions r(min) are the smallest chamfer dimensions allowable.

# 4.5 Dimensions of Snap Ring Grooves and Snap Rings

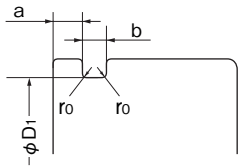


**Table 4.5.1 Dimensions of Snap Ring Grooves for Bearing Dimension Series 18 and 19** Unit: mm

| Nominal bearing outside diameter D | Snap ring groove diameter $D_1$ | | Snap ring groove location a | | | | Snap ring groove width b | | Fillet radius at snap ring groove bottom $r_0$ | Applicable snap ring |
|---|---|---|---|---|---|---|---|---|---|---|
| | | | Dimension series 18 | | Dimension series 19 | | | | | |
| | Max | Min | Max | Min | Max | Min | Max | Min | Max | |
| 22 | 20.8 | 20.5 | — | — | 1.05 | 0.9 | 1.05 | 0.8 | 0.2 | NR1022 |
| 24 | 22.8 | 22.5 | — | — | 1.05 | 0.9 | 1.05 | 0.8 | 0.2 | NR1024 |
| 28 | 26.7 | 26.4 | — | — | 1.3 | 1.15 | 1.2 | 0.95 | 0.25 | NR1028 |
| 30 | 28.7 | 28.4 | — | — | 1.3 | 1.15 | 1.2 | 0.95 | 0.25 | NR1030 |
| 32 | 30.7 | 30.4 | 1.3 | 1.15 | — | — | 1.2 | 0.95 | 0.25 | NR1032 |
| 34 | 32.7 | 32.4 | 1.3 | 1.15 | — | — | 1.2 | 0.95 | 0.25 | NR1034 |
| 37 | 35.7 | 35.4 | 1.3 | 1.15 | 1.7 | 1.55 | 1.2 | 0.95 | 0.25 | NR1037 |
| 39 | 37.7 | 37.4 | — | — | 1.7 | 1.55 | 1.2 | 0.95 | 0.25 | NR1039 |
| 40 | 38.7 | 38.4 | 1.3 | 1.15 | — | — | 1.2 | 0.95 | 0.25 | NR1040 |
| 42 | 40.7 | 40.4 | 1.3 | 1.15 | 1.7 | 1.55 | 1.2 | 0.95 | 0.25 | NR1042 |
| 44 | 42.7 | 42.4 | 1.3 | 1.15 | — | — | 1.2 | 0.95 | 0.25 | NR1044 |
| 45 | 43.7 | 43.4 | — | — | 1.7 | 1.55 | 1.2 | 0.95 | 0.25 | NR1045 |
| 47 | 45.7 | 45.4 | 1.3 | 1.15 | 1.7 | 1.55 | 1.2 | 0.95 | 0.25 | NR1047 |
| 52 | 50.7 | 50.4 | 1.3 | 1.15 | 1.7 | 1.55 | 1.2 | 0.95 | 0.25 | NR1052 |
| 55 | 53.7 | 53.4 | — | — | 1.7 | 1.55 | 1.2 | 0.95 | 0.25 | NR1055 |
| 58 | 56.7 | 56.4 | 1.3 | 1.15 | — | — | 1.2 | 0.95 | 0.25 | NR1058 |
| 62 | 60.7 | 60.3 | — | — | 1.7 | 1.55 | 1.2 | 0.95 | 0.25 | NR1062 |
| 65 | 63.7 | 63.3 | 1.3 | 1.15 | — | — | 1.2 | 0.95 | 0.25 | NR1065 |
| 68 | 66.7 | 66.3 | — | — | 1.7 | 1.55 | 1.2 | 0.95 | 0.25 | NR1068 |
| 72 | 70.7 | 70.3 | 1.7 | 1.55 | 1.7 | 1.55 | 1.2 | 0.95 | 0.25 | NR1072 |
| 78 | 76.2 | 75.8 | 1.7 | 1.55 | — | — | 1.6 | 1.3 | 0.4 | NR1078 |
| 80 | 77.9 | 77.5 | — | — | 2.1 | 1.9 | 1.6 | 1.3 | 0.4 | NR1080 |
| 85 | 82.9 | 82.5 | 1.7 | 1.55 | 2.1 | 1.9 | 1.6 | 1.3 | 0.4 | NR1085 |
| 90 | 87.9 | 87.5 | 1.7 | 1.55 | 2.1 | 1.9 | 1.6 | 1.3 | 0.4 | NR1090 |
| 95 | 92.9 | 92.5 | 1.7 | 1.55 | — | — | 1.6 | 1.3 | 0.4 | NR1095 |
| 100 | 97.9 | 97.5 | 1.7 | 1.55 | 2.5 | 2.3 | 1.6 | 1.3 | 0.4 | NR1100 |
| 105 | 102.6 | 102.1 | — | — | 2.5 | 2.3 | 1.6 | 1.3 | 0.4 | NR1105 |
| 110 | 107.6 | 107.1 | 2.1 | 1.9 | 2.5 | 2.3 | 1.6 | 1.3 | 0.4 | NR1110 |
| 115 | 112.6 | 112.1 | 2.1 | 1.9 | — | — | 1.6 | 1.3 | 0.4 | NR1115 |
| 120 | 117.6 | 117.1 | 2.1 | 1.9 | 3.3 | 3.1 | 1.6 | 1.3 | 0.4 | NR1120 |
| 125 | 122.6 | 122.1 | 2.1 | 1.9 | 3.3 | 3.1 | 1.6 | 1.3 | 0.4 | NR1125 |
| 130 | 127.6 | 127.1 | 2.1 | 1.9 | 3.3 | 3.1 | 1.6 | 1.3 | 0.4 | NR1130 |
| 140 | 137.6 | 137.1 | 2.5 | 2.3 | 3.3 | 3.1 | 2.2 | 1.9 | 0.6 | NR1140 |
| 145 | 142.6 | 142.1 | — | — | 3.3 | 3.1 | 2.2 | 1.9 | 0.6 | NR1145 |
| 150 | 147.6 | 147.1 | 2.5 | 2.3 | 3.3 | 3.1 | 2.2 | 1.9 | 0.6 | NR1150 |
| 165 | 161.8 | 161.3 | 3.3 | 3.1 | 3.7 | 3.5 | 2.2 | 1.9 | 0.6 | NR1165 |
| 175 | 171.8 | 171.3 | 3.3 | 3.1 | — | — | 2.2 | 1.9 | 0.6 | NR1175 |
| 180 | 176.8 | 176.3 | — | — | 3.7 | 3.5 | 2.2 | 1.9 | 0.6 | NR1180 |
| 190 | 186.8 | 186.3 | 3.3 | 3.1 | 3.7 | 3.5 | 2.2 | 1.9 | 0.6 | NR1190 |
| 200 | 196.8 | 196.3 | 3.3 | 3.1 | — | — | 2.2 | 1.9 | 0.6 | NR1200 |

Remarks: Minimum allowable chamfer at groove side of outer ring by nominal bearing outside diameter are shown below.
0.3 mm in dimension series 18 up to and including D = 78 mm, over D = 78 is 0.5 mm.
0.3 mm in dimension series 19 up to and including D = 47 mm, over D = 47 is 0.5 mm.





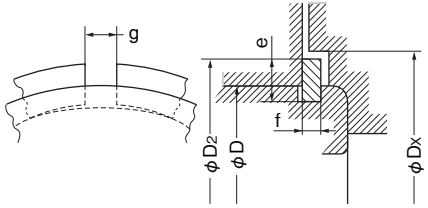


**Table 4.5.2 Snap Ring Dimensions and Mounted Dimensions for Bearing Dimensions Series 18 and 19** Unit: mm

| Snap ring No. | Snap ring dimensions | | | | After snap ring mounting | | Applicable Bearing | | | Diameter of end cover bore Dx (min) |
|---|---|---|---|---|---|---|---|---|---|---|
| | Section height e | | Thickness f | | | | Nominal bearing outside diameter D | Dimension series | | |
| | | | | | | | | 18 | 19 | |
| | Max | Min | Max | Min | Gap dimensions g | Outside diameter of snap ring $D_2$ (max) | | Nominal Bearing bore diameter d | | |
| NR1022 | 2.0 | 1.85 | 0.7 | 0.6 | 2 | 24.8 | 22 | — | 10 | 25.5 |
| NR1024 | 2.0 | 1.85 | 0.7 | 0.6 | 2 | 26.8 | 24 | — | 12 | 27.5 |
| NR1028 | 2.05 | 1.9 | 0.85 | 0.75 | 3 | 30.8 | 28 | — | 15 | 31.5 |
| NR1030 | 2.05 | 1.9 | 0.85 | 0.75 | 3 | 32.8 | 30 | — | 17 | 33.5 |
| NR1032 | 2.05 | 1.9 | 0.85 | 0.75 | 3 | 34.8 | 32 | 20 | — | 35.5 |
| NR1034 | 2.05 | 1.9 | 0.85 | 0.75 | 3 | 36.8 | 34 | 22 | — | 37.5 |
| NR1037 | 2.05 | 1.9 | 0.85 | 0.75 | 3 | 39.8 | 37 | 25 | 20 | 40.5 |
| NR1039 | 2.05 | 1.9 | 0.85 | 0.75 | 3 | 41.8 | 39 | — | 22 | 42.5 |
| NR1040 | 2.05 | 1.9 | 0.85 | 0.75 | 3 | 42.8 | 40 | 28 | — | 43.5 |
| NR1042 | 2.05 | 1.9 | 0.85 | 0.75 | 3 | 44.8 | 42 | 30 | 25 | 45.5 |
| NR1044 | 2.05 | 1.9 | 0.85 | 0.75 | 4 | 46.8 | 44 | 32 | — | 47.5 |
| NR1045 | 2.05 | 1.9 | 0.85 | 0.75 | 4 | 47.8 | 45 | — | 28 | 48.5 |
| NR1047 | 2.05 | 1.9 | 0.85 | 0.75 | 4 | 49.8 | 47 | 35 | 30 | 50.5 |
| NR1052 | 2.05 | 1.9 | 0.85 | 0.75 | 4 | 54.8 | 52 | 40 | 32 | 55.5 |
| NR1055 | 2.05 | 1.9 | 0.85 | 0.75 | 4 | 57.8 | 55 | — | 35 | 58.5 |
| NR1058 | 2.05 | 1.9 | 0.85 | 0.75 | 4 | 60.8 | 58 | 45 | — | 61.5 |
| NR1062 | 2.05 | 1.9 | 0.85 | 0.75 | 4 | 64.8 | 62 | — | 40 | 65.5 |
| NR1065 | 2.05 | 1.9 | 0.85 | 0.75 | 4 | 67.8 | 65 | 50 | — | 68.5 |
| NR1068 | 2.05 | 1.9 | 0.85 | 0.75 | 5 | 70.8 | 68 | — | 45 | 72 |
| NR1072 | 2.05 | 1.9 | 0.85 | 0.75 | 5 | 74.8 | 72 | 55 | 50 | 76 |
| NR1078 | 3.25 | 3.1 | 1.12 | 1.02 | 5 | 82.7 | 78 | 60 | — | 84 |
| NR1080 | 3.25 | 3.1 | 1.12 | 1.02 | 5 | 84.4 | 80 | — | 55 | 86 |
| NR1085 | 3.25 | 3.1 | 1.12 | 1.02 | 5 | 89.4 | 85 | 65 | 60 | 91 |
| NR1090 | 3.25 | 3.1 | 1.12 | 1.02 | 5 | 94.4 | 90 | 70 | 65 | 96 |
| NR1095 | 3.25 | 3.1 | 1.12 | 1.02 | 5 | 99.4 | 95 | 75 | — | 101 |
| NR1100 | 3.25 | 3.1 | 1.12 | 1.02 | 5 | 104.4 | 100 | 80 | 70 | 106 |
| NR1105 | 4.04 | 3.89 | 1.12 | 1.02 | 5 | 110.7 | 105 | — | 75 | 112 |
| NR1110 | 4.04 | 3.89 | 1.12 | 1.02 | 5 | 115.7 | 110 | 85 | 80 | 117 |
| NR1115 | 4.04 | 3.89 | 1.12 | 1.02 | 5 | 120.7 | 115 | 90 | — | 122 |
| NR1120 | 4.04 | 3.89 | 1.12 | 1.02 | 7 | 125.7 | 120 | 95 | 85 | 127 |
| NR1125 | 4.04 | 3.89 | 1.12 | 1.02 | 7 | 130.7 | 125 | 100 | 90 | 132 |
| NR1130 | 4.04 | 3.89 | 1.12 | 1.02 | 7 | 135.7 | 130 | 105 | 95 | 137 |
| NR1140 | 4.04 | 3.89 | 1.7 | 1.6 | 7 | 145.7 | 140 | 110 | 100 | 147 |
| NR1145 | 4.04 | 3.89 | 1.7 | 1.6 | 7 | 150.7 | 145 | — | 105 | 152 |
| NR1150 | 4.04 | 3.89 | 1.7 | 1.6 | 7 | 155.7 | 150 | 120 | 110 | 157 |
| NR1165 | 4.85 | 4.7 | 1.7 | 1.6 | 7 | 171.5 | 165 | 130 | 120 | 173 |
| NR1175 | 4.85 | 4.7 | 1.7 | 1.6 | 10 | 181.5 | 175 | 140 | — | 183 |
| NR1180 | 4.85 | 4.7 | 1.7 | 1.6 | 10 | 186.5 | 180 | — | 130 | 188 |
| NR1190 | 4.85 | 4.7 | 1.7 | 1.6 | 10 | 196.5 | 190 | 150 | 140 | 198 |
| NR1200 | 4.85 | 4.7 | 1.7 | 1.6 | 10 | 206.5 | 200 | 160 | — | 208 |

Remarks: Minimum allowable chamfer at groove side of outer ring by nominal bearing outside diameter are shown below.
0.3 mm in dimension series 18 up to and including D = 78 mm, over D = 78 is 0.5 mm.
0.3 mm in dimension series 19 up to and including D = 47 mm, over D = 47 is 0.5 mm.

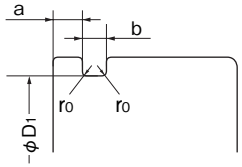


**Table 4.5.3 Dimensions of Snap Ring Grooves for Bearing Diameter Series 0, 2, 3 and 4** Unit: mm

| Nominal bearing outside diameter D | Snap ring groove diameter $D_1$ | | Snap ring groove location a | | | | Snap ring groove width b | | Fillet radius at snap ring groove bottom $r_0$ | Applicable snap ring |
|---|---|---|---|---|---|---|---|---|---|---|
| | | | Dimension series 0 | | Dimension series 2, 3, 4 | | | | | |
| | Max | Min | Max | Min | Max | Min | Max | Min | Max | |
| 13 | 12.04 | 11.91 | — | — | 1.1 | 0.95 | 1.05 | 0.8 | 0.2 | **NR 13** |
| 16 | 15.16 | 15.04 | — | — | 1.2 | 1.05 | 1.05 | 0.8 | 0.2 | **NR 16** |
| 19 | 18.25 | 18.1 | 1.73 | 1.55 | 1.73 | 1.55 | 1.05 | 0.8 | 0.2 | **NR 19** |
| 22 | 21.11 | 20.95 | 1.73 | 1.55 | 1.73 | 1.55 | 1.05 | 0.8 | 0.2 | **NR 22** |
| 24 | 23 | 22.85 | 1.73 | 1.55 | 1.73 | 1.55 | 1.05 | 0.8 | 0.2 | **NR 24** |
| 26 | 25.15 | 25 | 1.73 | 1.55 | 1.73 | 1.55 | 1.05 | 0.8 | 0.2 | **NR 26** |
| 28 | 26.7 | 26.4 | 1.73 | 1.55 | 1.73 | 1.55 | 1.2 | 0.95 | 0.25 | **NR 28** |
| 30 | 28.17 | 27.91 | — | — | 2.06 | 1.9 | 1.65 | 1.35 | 0.4 | **NR 30** |
| 32 | 30.15 | 29.9 | 2.06 | 1.9 | 2.06 | 1.9 | 1.65 | 1.35 | 0.4 | **NR 32** |
| 35 | 33.17 | 32.92 | 2.06 | 1.9 | 2.06 | 1.9 | 1.65 | 1.35 | 0.4 | **NR 35** |
| 37 | 34.77 | 34.52 | — | — | 2.06 | 1.9 | 1.65 | 1.35 | 0.4 | **NR 37** |
| 40 | 38.1 | 37.85 | — | — | 2.06 | 1.9 | 1.65 | 1.35 | 0.4 | **NR 40** |
| 42 | 39.75 | 39.5 | 2.06 | 1.9 | 2.06 | 1.9 | 1.65 | 1.35 | 0.4 | **NR 42** |
| 44 | 41.75 | 41.5 | 2.06 | 1.9 | — | — | 1.65 | 1.35 | 0.4 | **NR 44** |
| 47 | 44.6 | 44.35 | 2.06 | 1.9 | 2.46 | 2.31 | 1.65 | 1.35 | 0.4 | **NR 47** |
| 50 | 47.6 | 47.35 | — | — | 2.46 | 2.31 | 1.65 | 1.35 | 0.4 | **NR 50** |
| 52 | 49.73 | 49.48 | 2.06 | 1.9 | 2.46 | 2.31 | 1.65 | 1.35 | 0.4 | **NR 52** |
| 55 | 52.6 | 52.35 | 2.08 | 1.88 | — | — | 1.65 | 1.35 | 0.4 | **NR 55** |
| 56 | 53.6 | 53.35 | — | — | 2.46 | 2.31 | 1.65 | 1.35 | 0.4 | **NR 56** |
| 58 | 55.6 | 55.35 | 2.08 | 1.88 | 2.46 | 2.31 | 1.65 | 1.35 | 0.4 | **NR 58** |
| 62 | 59.61 | 59.11 | 2.08 | 1.88 | 3.28 | 3.07 | 2.2 | 1.9 | 0.6 | **NR 62** |
| 65 | 62.6 | 62.1 | — | — | 3.28 | 3.07 | 2.2 | 1.9 | 0.6 | **NR 65** |
| 68 | 64.82 | 64.31 | 2.49 | 2.29 | 3.28 | 3.07 | 2.2 | 1.9 | 0.6 | **NR 68** |
| 72 | 68.81 | 68.3 | — | — | 3.28 | 3.07 | 2.2 | 1.9 | 0.6 | **NR 72** |
| 75 | 71.83 | 71.32 | 2.49 | 2.29 | 3.28 | 3.07 | 2.2 | 1.9 | 0.6 | **NR 75** |
| 80 | 76.81 | 76.3 | 2.49 | 2.29 | 3.28 | 3.07 | 2.2 | 1.9 | 0.6 | **NR 80** |
| 85 | 81.81 | 81.31 | — | — | 3.28 | 3.07 | 2.2 | 1.9 | 0.6 | **NR 85** |
| 90 | 86.79 | 86.28 | 2.87 | 2.67 | 3.28 | 3.07 | 3 | 2.7 | 0.6 | **NR 90** |
| 95 | 91.82 | 91.31 | 2.87 | 2.67 | — | — | 3 | 2.7 | 0.6 | **NR 95** |
| 100 | 96.8 | 96.29 | 2.87 | 2.67 | 3.28 | 3.07 | 3 | 2.7 | 0.6 | **NR100** |
| 110 | 106.81 | 106.3 | 2.87 | 2.67 | 3.28 | 3.07 | 3 | 2.7 | 0.6 | **NR110** |
| 115 | 111.81 | 111.3 | 2.87 | 2.67 | — | — | 3 | 2.7 | 0.6 | **NR115** |
| 120 | 115.21 | 114.71 | — | — | 4.06 | 3.86 | 3.4 | 3.1 | 0.6 | **NR120** |
| 125 | 120.22 | 119.71 | 2.87 | 2.67 | 4.06 | 3.86 | 3.4 | 3.1 | 0.6 | **NR125** |
| 130 | 125.22 | 124.71 | 2.87 | 2.67 | 4.06 | 3.86 | 3.4 | 3.1 | 0.6 | **NR130** |
| 140 | 135.23 | 134.72 | 3.71 | 3.45 | 4.9 | 4.65 | 3.4 | 3.1 | 0.6 | **NR140** |
| 145 | 140.23 | 139.73 | 3.71 | 3.45 | — | — | 3.4 | 3.1 | 0.6 | **NR145** |
| 150 | 145.24 | 144.73 | 3.71 | 3.45 | 4.9 | 4.65 | 3.4 | 3.1 | 0.6 | **NR150** |
| 160 | 155.22 | 154.71 | 3.71 | 3.45 | 4.9 | 4.65 | 3.4 | 3.1 | 0.6 | **NR160** |
| 170 | 163.65 | 163.14 | 3.71 | 3.45 | 5.69 | 5.44 | 3.8 | 3.5 | 0.6 | **NR170** |
| 180 | 173.66 | 173.15 | 3.71 | 3.45 | 5.69 | 5.44 | 3.8 | 3.5 | 0.6 | **NR180** |
| 190 | 183.64 | 183.13 | — | — | 5.69 | 5.44 | 3.8 | 3.5 | 0.6 | **NR190** |
| 200 | 193.65 | 193.14 | 5.69 | 5.44 | 5.69 | 5.44 | 3.8 | 3.5 | 0.6 | **NR200** |
| 210 | 203.6 | 203.1 | 5.69 | 5.44 | — | — | 3.8 | 3.5 | 1 | **NR210** |
| 215 | 208.6 | 208.1 | — | — | 5.69 | 5.44 | 3.8 | 3.5 | 1 | **NR215** |
| 225 | 217 | 216.5 | 6.5 | 6.2 | 6.5 | 6.2 | 4.9 | 4.5 | 1 | **NR225** |
| 230 | 222 | 221.5 | — | — | 6.5 | 6.2 | 4.9 | 4.5 | 1 | **NR230** |
| 240 | 232 | 231.5 | 6.5 | 6.2 | 6.5 | 6.2 | 4.9 | 4.5 | 1 | **NR240** |
| 250 | 242 | 241.5 | — | — | 6.5 | 6.2 | 4.9 | 4.5 | 1 | **NR250** |

Remarks: 1. These dimensions are applied to diameter series 0, 2, 3, and 4 but not to dimension series 00, 82, and 83.
2. Minimum allowable chamfer for outside of outer ring is 0.5 mm.
However, it is 0.3 mm for diameter series 0 and nominal bearing outside diameter 35 mm.





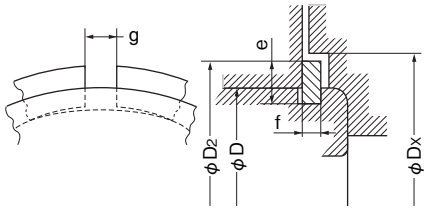


**Table 4.5.4 Snap Ring Dimensions for Bearing Diameter Series 0, 2, 3 and 4** Unit: mm

| Snap ring No. | Snap ring dimensions | | | | After snap ring mounting | | Applicable Bearing | | | | | Diameter of end cover bore Dx (min) |
|---|---|---|---|---|---|---|---|---|---|---|---|---|
| | Section height e | | Thickness f | | | | Nominal bearing outside diameter D | Diameter series | | | | |
| | | | | | | | | 0 | 2 | 3 | 4 | |
| | Max | Min | Max | Min | Gap dimensions g | Outside diameter of snap ring $D_2$ (max) | | Nominal Bearing bore diameter d | | | | |
| **NR 13** | 1.15 | 1.0 | 0.7 | 0.6 | 3 | 14.3 | 13 | — | 4 | 3 | — | 14.5 |
| **NR 16** | 1.65 | 1.5 | 0.7 | 0.6 | 3 | 18.5 | 16 | — | 5 | 4 | — | 19 |
| **NR 19** | 1.65 | 1.5 | 0.7 | 0.6 | 3 | 21.5 | 19 | 7 | 6 | 5 | — | 22 |
| **NR 22** | 2.00 | 1.85 | 0.7 | 0.6 | 3 | 25.1 | 22 | 8 | 7 | 6 | — | 25.5 |
| **NR 24** | 2.00 | 1.85 | 0.7 | 0.6 | 3 | 27 | 24 | 9 | 8 | — | — | 27.5 |
| **NR 26** | 2.00 | 1.85 | 0.7 | 0.6 | 3 | 29.2 | 26 | 10 | 9 | 7 | — | 30 |
| **NR 28** | 2.05 | 1.90 | 0.85 | 0.75 | 3 | 30.8 | 28 | 12 | — | 8 | — | 31.5 |
| **NR 30** | 3.25 | 3.1 | 1.12 | 1.02 | 3 | 34.7 | 30 | — | 10 | 9 | 8 | 35.5 |
| **NR 32** | 3.25 | 3.1 | 1.12 | 1.02 | 3 | 36.7 | 32 | 15 | 12 | — | 9 | 37.5 |
| **NR 35** | 3.25 | 3.1 | 1.12 | 1.02 | 3 | 39.7 | 35 | 17 | 15 | 10 | — | 40.5 |
| **NR 37** | 3.25 | 3.1 | 1.12 | 1.02 | 3 | 41.3 | 37 | — | — | 12 | 10 | 42 |
| **NR 40** | 3.25 | 3.1 | 1.12 | 1.02 | 3 | 44.6 | 40 | — | 17 | — | — | 45.5 |
| **NR 42** | 3.25 | 3.1 | 1.12 | 1.02 | 3 | 46.3 | 42 | 20 | — | 15 | 12 | 47 |
| **NR 44** | 3.25 | 3.1 | 1.12 | 1.02 | 3 | 48.3 | 44 | 22 | — | — | — | 49 |
| **NR 47** | 4.04 | 3.89 | 1.12 | 1.02 | 4 | 52.7 | 47 | 25 | 20 | 17 | — | 53.5 |
| **NR 50** | 4.04 | 3.89 | 1.12 | 1.02 | 4 | 55.7 | 50 | — | 22 | — | — | 56.5 |
| **NR 52** | 4.04 | 3.89 | 1.12 | 1.02 | 4 | 57.9 | 52 | 28 | 25 | 20 | 15 | 58.5 |
| **NR 55** | 4.04 | 3.89 | 1.12 | 1.02 | 4 | 60.7 | 55 | 30 | — | — | — | 61.5 |
| **NR 56** | 4.04 | 3.89 | 1.12 | 1.02 | 4 | 61.7 | 56 | — | — | 22 | — | 62.5 |
| **NR 58** | 4.04 | 3.89 | 1.12 | 1.02 | 4 | 63.7 | 58 | 32 | 28 | — | — | 64.5 |
| **NR 62** | 4.04 | 3.89 | 1.7 | 1.6 | 4 | 67.7 | 62 | 35 | 30 | 25 | 17 | 68.5 |
| **NR 65** | 4.04 | 3.89 | 1.7 | 1.6 | 4 | 70.7 | 65 | — | 32 | — | — | 71.5 |
| **NR 68** | 4.85 | 4.7 | 1.7 | 1.6 | 5 | 74.6 | 68 | 40 | — | 28 | — | 76 |
| **NR 72** | 4.85 | 4.7 | 1.7 | 1.6 | 5 | 78.6 | 72 | — | 35 | 30 | 20 | 80 |
| **NR 75** | 4.85 | 4.7 | 1.7 | 1.6 | 5 | 81.6 | 75 | 45 | — | 32 | — | 83 |
| **NR 80** | 4.85 | 4.7 | 1.7 | 1.6 | 5 | 86.6 | 80 | 50 | 40 | 35 | 25 | 88 |
| **NR 85** | 4.85 | 4.7 | 1.7 | 1.6 | 5 | 91.6 | 85 | — | 45 | — | — | 93 |
| **NR 90** | 4.85 | 4.7 | 2.46 | 2.36 | 5 | 96.5 | 90 | 55 | 50 | 40 | 30 | 98 |
| **NR 95** | 4.85 | 4.7 | 2.46 | 2.36 | 5 | 101.6 | 95 | 60 | — | — | — | 103 |
| **NR100** | 4.85 | 4.7 | 2.46 | 2.36 | 5 | 106.5 | 100 | 65 | 55 | 45 | 35 | 108 |
| **NR110** | 4.85 | 4.7 | 2.46 | 2.36 | 5 | 116.6 | 110 | 70 | 60 | 50 | 40 | 118 |
| **NR115** | 4.85 | 4.7 | 2.46 | 2.36 | 5 | 121.6 | 115 | 75 | — | — | — | 123 |
| **NR120** | 7.21 | 7.06 | 2.82 | 2.72 | 7 | 129.7 | 120 | — | 65 | 55 | 45 | 131.5 |
| **NR125** | 7.21 | 7.06 | 2.82 | 2.72 | 7 | 134.7 | 125 | 80 | 70 | — | — | 136.5 |
| **NR130** | 7.21 | 7.06 | 2.82 | 2.72 | 7 | 139.7 | 130 | 85 | 75 | 60 | 50 | 141.5 |
| **NR140** | 7.21 | 7.06 | 2.82 | 2.72 | 7 | 149.7 | 140 | 90 | 80 | 65 | 55 | 152 |
| **NR145** | 7.21 | 7.06 | 2.82 | 2.72 | 7 | 154.7 | 145 | 95 | — | — | — | 157 |
| **NR150** | 7.21 | 7.06 | 2.82 | 2.72 | 7 | 159.7 | 150 | 100 | 85 | 70 | 60 | 162 |
| **NR160** | 7.21 | 7.06 | 2.82 | 2.72 | 7 | 169.7 | 160 | 105 | 90 | 75 | 65 | 172 |
| **NR170** | 9.6 | 9.45 | 3.1 | 3 | 10 | 182.9 | 170 | 110 | 95 | 80 | — | 185 |
| **NR180** | 9.6 | 9.45 | 3.1 | 3 | 10 | 192.9 | 180 | 120 | 100 | 85 | 70 | 195 |
| **NR190** | 9.6 | 9.45 | 3.1 | 3 | 10 | 202.9 | 190 | — | 105 | 90 | 75 | 205 |
| **NR200** | 9.6 | 9.45 | 3.1 | 3 | 10 | 212.9 | 200 | 130 | 110 | 95 | 80 | 215 |
| **NR210** | 9.6 | 9.45 | 3.1 | 3 | 10 | 222.8 | 210 | 140 | — | — | 85 | 225 |
| **NR215** | 9.6 | 9.45 | 3.1 | 3 | 10 | 227.8 | 215 | — | 120 | 100 | — | 230 |
| **NR225** | 10 | 9.85 | 3.5 | 3.4 | 10 | 237 | 225 | 150 | — | 105 | 90 | 240 |
| **NR230** | 10 | 9.85 | 3.5 | 3.4 | 10 | 242 | 230 | — | 130 | — | — | 245 |
| **NR240** | 10 | 9.85 | 3.5 | 3.4 | 10 | 252 | 240 | 160 | — | 110 | 95 | 255 |
| **NR250** | 10 | 9.85 | 3.5 | 3.4 | 10 | 262 | 250 | — | 140 | — | 100 | 265 |

Remarks 1. These dimensions are applied to diameter series 0, 2, 3, and 4 but not to dimension series 00, 82, and 83.
2. Minimum allowable chamfer for outside of outer ring is 0.5 mm.
However, it is 0.3 mm for diameter series 0 and nominal bearing outside diameter 35 mm.

# 4.6 Rolling Contact Bearing Numbers

**Table 4.6 Rolling Contact Bearing Numbers Configuration**

| Supplementary Prefix symbol | | Basic No. | | | | | | Supplementary Suffix symbol | | | | | | | | | | | | | | | | | | | |
|---|---|---|---|---|---|---|---|---|---|---|---|---|---|---|---|---|---|---|---|---|---|---|---|---|---|---|---|
| Material symbols | | Bearing Series Code | | Bore Diameter Number | | Contact Angle Code | | Special Design Symbols | | *Cage symbols | | External feature symbols: Seal or shield symbols | | | External feature symbols: Ring modification symbols | | Combination symbols | | *Sleeve symbols | | Internal clearance symbols | | Tolerance class symbols | | Grease symbols | |
| Prefix | Description | | Description | | Description | | Description | Suffix | Description | Suffix | Description | Suffix | Description | | Suffix | Description | Suffix | Description | Suffix | Description | Suffix | Description (radial clearance) | Suffix | Description | Suffix | Description |
| B- | Case hardened steel | 68 | Single row Deep-groove Ball Bearings | 1 | Diameter 1 mm | Single row Angular Contact Ball Bearings | | A | Inner ring width variation for tapered roller bearing | F | With machined mild steel cage | ZE | Shield one side | | K | Bearing diameter 1/12 Taper | DB | Back-to-back mounting | +H | Adapter sleeve | C1 | Radial clearance C1 | (O) | JIS class 0 | (AV2) | Shell Alvania grease No. 2 |
| | | 69 | | 2 | 2 | C | Nominal contact angle over 10° under 22° (standard 15°) | | | G | Non-metallic cage | Z | Shield one side | | | | | | | | C2 | Radial clearance C2 | P6 | JIS class 6 | BC325 | Esso Beacon 325 |
| | | 60 | | 3 | 3 | | | E | Roller bearing design change | L | Machined light alloy cage | ZZE | Shield both sides | | K30 | Bearing diameter 1/30 Taper | DF | Face-to-face mounting | +AH | Withdrawal sleeve | (CN) | Normal radial clearance | P6X | JIS class 6X | MTSRL | Multemp SRL |
| C- | Case hardened steel | 70 | Single row Angular Contact Ball Bearings | 9 | 9 | (A) | Nominal contact angle over 22° under 32° (standard 30°) | J | Tapered roller bearing inner and outer rings internationally interchangeable | MY | Machined bronze cage | ZZ | Shield both sides | | N | Snap ring groove on outer ring | DT | Tandem mounting | | | C3 | Radial clearance C3 | P5 | JIS class 5 | PS2 | Multemp PS2 |
| | | 72 | | 00 | 10 | | | | | V | No cage | NKE | Labyrinth seal one side | | NR | Snap ring groove and snap ring on outer ring | KB | DB mounting with spacer to outer ring | | | C4 | Radial clearance C4 | P4 | JIS class 4 | | |
| | | 73 | | 01 | 12 | | | | | Y | Pressed non-metallic cage | NK | Labyrinth seal one side | | | | +α | Spacer (+α is nominal width in mm) | | | C5 | Radial clearance C5 | P2 | JIS class 2 | | |
| D- | Case hardened steel | 12 | Self-Aligning Ball Bearings | 02 | 15 | B | Nominal contact angle over 32° under 45° (standard 40°) | S26 | Heat stabilization treatment | | | -2NKE | Labyrinth seal both sides | | | | D DU | Flush ground ball bearing | | | C1P | Radial clearance C1P (extra small ball bearings and miniature ball bearings) | UP | NACHI class UP | | |
| | | 13 | | 03 | 17 | | | | | | | -2NK | Labyrinth seal both sides | | | | | | | | C2P | Radial clearance C2P (extra small ball bearings and miniature ball bearings) | | | | |
| H- | High speed steel | 22 | | 04 | 20 | Tapered Roller Bearings | | S28 | Heat stabilization treatment | | | NSE | Contact seal one side | | | | | | | | C6P | Radial clearance C6P (extra small ball bearings and miniature ball bearings) | | | | |
| | | /22 | | 05 | 22 | D | Nominal contact angle over 24° under 32° | W20 | Oil holes in outer ring | | | NSL | Contact seal one side | | | | | | | | C9na | Cylindrical roller bearing non-interchangeable clearance C9 | | | | |
| | | /28 | | 06 | 25 | | | W33 | Oil holes and grooves in outer ring | | | -2NSE | Contact seal both sides | | | | | | | | C1na | Cylindrical roller bearing non-interchangeable clearance C1 | | | | |
| | | 06 | | /32 | 28 | C | Nominal contact angle over 17° under 24° | E2 | Spherical roller bearing with machined cage | | | -2NSL | Contact seal both sides | | | | | | | | C2na | Cylindrical roller bearing non-interchangeable clearance C2 | | | | |
| | | /32 | | 07 | 30 | | | EX | High capacity spherical roller bearing | | | | | | | | | | | | CM | Deep groove ball bearings and non-interchangeable clearance of cylindrical roller bearings for electric motors | | | | |
| S- | Stainless steel | 07 | | 08 | 35 | | | A2X | High speed spherical roller bearing | | | | | | | | | | | | CT | Interchangeable clearance of cylindrical roller bearings for electric motors | | | | |
| | | 08 | | | 40 | | | AEX | High speed and high capacity spherical roller bearing | | | | | | | | | | | | | | | | | |
| | | NU 10 | Cylindrical Roller Bearings | 88 | 440 | | | V | Special design for vibrating machine | | | | | | | | | | | | | | | | | |
| | | NJ 2 | | 92 | 460 | | | | | | | | | | | | | | | | | | | | | |
| | | N 3 | | 96 | 480 | | | | | | | | | | | | | | | | | | | | | |
| | | NN 30 | | /500 | 500 | | | | | | | | | | | | | | | | | | | | | |
| | | NA48 | Needle Roller Bearings | /530 | 530 | | | | | | | | | | | | | | | | | | | | | |
| | | NA49 | | /560 | 560 | | | | | | | | | | | | | | | | | | | | | |
| | | NA69 | | | | | | | | | | | | | | | | | | | | | | | | |
| | | 320 | Tapered Roller Bearings | | | | | | | | | | | | | | | | | | | | | | | |
| | | 322 | | | | | | | | | | | | | | | | | | | | | | | | |
| | | 323 | | | | | | | | | | | | | | | | | | | | | | | | |
| | | 230 | Spherical Roller Bearings | | | | | | | | | | | | | | | | | | | | | | | |
| | | 222 | | | | | | | | | | | | | | | | | | | | | | | | |
| | | 223 | | | | | | | | | | | | | | | | | | | | | | | | |
| | | 511 | Flat Back Face Thrust Ball Bearings | | | | | | | | | | | | | | | | | | | | | | | |
| | | 512 | | | | | | | | | | | | | | | | | | | | | | | | |
| | | 513 | | | | | | | | | | | | | | | | | | | | | | | | |
| | | 292 | Spherical Roller Thrust Bearings | | | | | | | | | | | | | | | | | | | | | | | |
| | | 293 | | | | | | | | | | | | | | | | | | | | | | | | |
| | | 294 | | | | | | | | | | | | | | | | | | | | | | | | |

Note: (1) Denotes polyamide for angular contact ball bearing of contact angle symbol C.
Remarks: 1. Symbols in parentheses can be omitted.
2. Symbols marked with an "*" are not marked on the bearings.
3. Bearing modification symbol NR is marked without R on the bearings.

## NACHI Rolling Contact Bearing Numbers ···Examples

The NACHI part number for rolling contact bearings consists of the basic number and supplementary codes. The part number defines the bearing configuration, tolerance, general boundary dimensions, and other specifications.

NACHI uses supplemental prefix and suffix symbols as shown in Table 4.6. The NACHI basic number consists of the following:

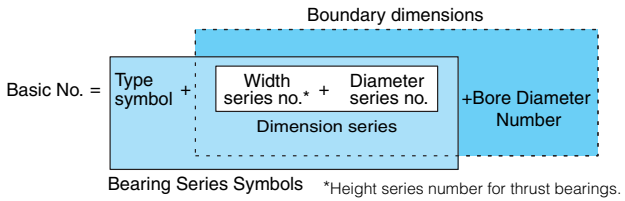


Bore Diameter number

| Bore (mm) | 4 | 5 | 6 | 7 | 8 | 9 | 10 | 12 | 15 | 17 | 20 | 25 | ···· | 480 | 500 | 530 | ···· |
|---|---|---|---|---|---|---|---|---|---|---|---|---|---|---|---|---|---|
| Bore diameter number | 4 | 5 | 6 | 7 | 8 | 9 | 00 | 01 | 02 | 03 | 04 | 05 | ···· | 96 | /500 | /530 | ···· |
| Remarks | Bore Diameter | | | | | | —— | | | | (bore dia.)/5 | | | | /bore diameter | | |

Example 1

**6 2 04 ZZE C3 P6**

- P6: Tolerance symbol (JIS class 6)
- C3: Internal clearance symbol (C3)
- ZZE: Shields (2 shields)
- 04: Bore diameter number (20 mm)
- 2: Diameter series no. (series 2)
- 6: Type symbol (Single row deep groove ball bearing)

Example 3

**2 3 0 34 E W33 K**

- K: Ring modification symbol (1/12 tapered bore)
- W33: Special design symbol (Oil hole and groove in outer ring)
- E: Special design symbol (improvement)
- 34: Bore diameter number (170 mm)
- 0: Diameter series no. (series 0)
- 3: Width series number (Series 3)
- 2: Type symbol (Spherical Roller Thrust Bearings)

Example 2

**7 2 10 C Y DB /GL P4**

- P4: Tolerance symbol (JIS class 4)
- /GL: Internal clearance symbol (Light preload)
- DB: Duplex mounting (Back-to-back)
- Y: Cage symbol (Polyamide cage)
- C: Contact angle symbol (15° angle)
- 10: Bore diameter number (50 mm)
- 2: Diameter series no. (series 2)
- 7: Type symbol (Single row angular contact ball bearing)

Example 4

**5 1 2 08**

- 08: Bore diameter number (40 mm)
- 2: Diameter series no. (series 2)
- 1: Height series (Series 1)
- 5: Type symbol (Thrust ball bearing)





# 5. Accuracy of Rolling Contact Bearings

The tolerance of rolling contact bearings includes dimensional and running accuracy. According to JIS (Japanese Industrial Standard), tolerance is classified into 6 classes; class 0, 6, 6X, 5, 4 and 2 with accuracy ascending from class 0 to 2.

Applicable tolerance classes to individual bearing types and applicable standards are shown in the table below.

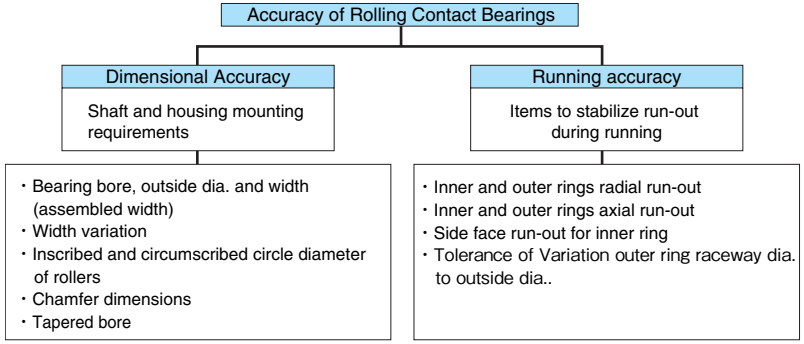


### Bearing types and tolerance classes

| Bearing Type | | | Tolerance class | | | | | Related Standard | Reference Tables |
|---|---|---|---|---|---|---|---|---|---|
| Deep Groove Ball Bearings | | | JIS class 0 | JIS class 6 | JIS class 5 | JIS class 4 | JIS class 2 | JIS B 1514 | Table 5.1.1 |
| Miniature Ball Bearings Extra Small Ball Bearings | Metric Series | Standard | JIS class 0 | JIS class 6 | JIS class 5 | JIS class 4 | JIS class 2 | JIS B 1514 | Table 5.1.2 |
| | | Instrument | — | — | ISO5A | ISO4A | — | ISO 1224 | — |
| | Inch Series | Instrument | — | ABEC 3P | ABEC 5P | ABEC 7P | ABEC 9P | ANSI Std 12,2 | — |
| Angular Contact Ball Bearings | | | JIS class 0 | JIS class 6 | JIS class 5 | JIS class 4 | JIS class 2 | JIS B 1514 | Table 5.1.1 Table 5.1.2 |
| Self-Aligning Ball Bearings | | | JIS class 0 | — | — | — | — | | |
| Cylindrical Roller Bearings | | | JIS class 0 | JIS class 6 | JIS class 5 | JIS class 4 | JIS class 2 | | |
| Spherical Roller Bearings | | | JIS class 0 | — | — | — | — | | |
| Tapered Roller Bearings | | Metric Series | JIS class 0 JIS class 6X | JIS class 6 | JIS class 5 | JIS class 4 | — | JIS B 1514 | Table 5.2.1 to 5.2.3 |
| | | Inch Series | CLASS 4 | CLASS 2 | CLASS 3 | CLASS 0 | CLASS 00 | ANSI／ABMA 19 | Table 5.5.1 to 5.5.4 |
| Thrust Ball Bearings | | | JIS class 0 | JIS class 6 | JIS class 5 | JIS class 4 | — | JIS B 1514 | Table 5.3.1 to 5.3.3 |
| Spherical Roller Thrust Bearings | | | JIS class 0 | — | — | — | — | JIS B 1514 | Table 5.4.1, 5.4.2 |

### Metric Radial Bearings (Except Tapered Roller Bearings) Class Comparison

| Bearing Type | | | Tolerance class | | | | | Related Standard | Reference Tables |
|---|---|---|---|---|---|---|---|---|---|
| Comparative Classes (Reference) | ISO(1) | | NORMAL CLASS | — CLASS 6 | — CLASS 5 | — CLASS 4 | — CLASS 2 | ISO 492 etc. | — |
| | DIN(2) | | P0 | P6 | P5 | P4 | P2 | DIN 620 | — |
| | ANSI(3)／ABMA(4) | Ball Bearings | ABEC 1 | ABEC 3 | ABEC 5 | ABEC 7 | ABEC 9 | ANSI／ABMA 20 | — |
| | | Roller Bearings | RBEC 1 | RBEC 3 | RBEC 5 | — | — | ANSI／ABMA 20 | — |

Notes: (1) ISO International Standard (2) German Industrial Standards
(3) American National Standards Institute (4) American Bearing Manufacturers Association
Remark: For tolerances of chamfer dimensions, see Table 5.6.1 to 5.6.3; for accuracy of tapered bore, see Table 5.7.1 to 5.7.2.

# 5.1 Tolerance Values for Radial Bearings (Except Tapered Roller Bearings)

## Table 5.1.1 Tolerance Values of Inner Ring and of Outer Ring Width

Unit: μm

| Nominal bearing bore diameter d (mm) | | Bearing with cylindrical bore: Single plane mean bore diameter deviation (2) $\Delta d_{mp}$ | | | | | | | | | | Deviation of a single bore diameter (2) $\Delta d_s$ | | | | Bore diameter variation in a single radial plane (2) $V_{dp}$ | | | | | | | | | | Mean bore diameter variation (2) $V_{dmp}$ | | | | | | Nominal bearing bore diameter d (mm) | |
|---|---|---|---|---|---|---|---|---|---|---|---|---|---|---|---|---|---|---|---|---|---|---|---|---|---|---|---|---|---|---|---|---|---|
| | | Class 0 | | Class 6 | | Class 5 | | Class 4 | | Class 2 | | Class 4 Diameter series 0,1,2,3,4 | | Class 2 | | Class 0 Diameter series 7,8,9 | Class 0 Diameter series 0,1 | Class 0 Diameter series 2,3,4 | Class 6 Diameter series 7,8,9 | Class 6 Diameter series 0,1 | Class 6 Diameter series 2,3,4 | Class 5 Diameter series 7,8,9 | Class 5 Diameter series 0,1,2,3,4 | Class 4 Diameter series 7,8,9 | Class 4 Diameter series 0,1,2,3,4 | Class 2 | Class 0 | Class 6 | Class 5 | Class 4 | Class 2 | | |
| Over | Incl. | High | Low | High | Low | High | Low | High | Low | High | Low | High | Low | High | Low | Max | | | Max | | | Max | | Max | | Max | Max | Max | Max | Max | Max | Over | Incl. |
| 0.6(1) | 2.5 | 0 | –8 | 0 | –7 | 0 | –5 | 0 | –4 | 0 | –2.5 | 0 | –4 | 0 | –2.5 | 10 | 8 | 6 | 9 | 7 | 5 | 5 | 4 | 4 | 3 | 2.5 | 6 | 5 | 3 | 2 | 1.5 | 0.6(1) | 2.5 |
| 2.5 | 10 | 0 | –8 | 0 | –7 | 0 | –5 | 0 | –4 | 0 | –2.5 | 0 | –4 | 0 | –2.5 | 10 | 8 | 6 | 9 | 7 | 5 | 5 | 4 | 4 | 3 | 2.5 | 6 | 5 | 3 | 2 | 1.5 | 2.5 | 10 |
| 10 | 18 | 0 | –8 | 0 | –7 | 0 | –5 | 0 | –4 | 0 | –2.5 | 0 | –4 | 0 | –2.5 | 10 | 8 | 6 | 9 | 7 | 5 | 5 | 4 | 4 | 3 | 2.5 | 6 | 5 | 3 | 2 | 1.5 | 10 | 18 |
| 18 | 30 | 0 | –10 | 0 | –8 | 0 | –6 | 0 | –5 | 0 | –2.5 | 0 | –5 | 0 | –2.5 | 13 | 10 | 8 | 10 | 8 | 6 | 6 | 5 | 5 | 4 | 2.5 | 8 | 6 | 3 | 2.5 | 1.5 | 18 | 30 |
| 30 | 50 | 0 | –12 | 0 | –10 | 0 | –8 | 0 | –6 | 0 | –2.5 | 0 | –6 | 0 | –2.5 | 15 | 12 | 9 | 13 | 10 | 8 | 8 | 6 | 6 | 5 | 2.5 | 9 | 8 | 4 | 3 | 1.5 | 30 | 50 |
| 50 | 80 | 0 | –15 | 0 | –12 | 0 | –9 | 0 | –7 | 0 | –4 | 0 | –7 | 0 | –4 | 19 | 19 | 11 | 15 | 15 | 9 | 9 | 7 | 7 | 5 | 4 | 11 | 9 | 5 | 3.5 | 2 | 50 | 80 |
| 80 | 120 | 0 | –20 | 0 | –15 | 0 | –10 | 0 | –8 | 0 | –5 | 0 | –8 | 0 | –5 | 25 | 25 | 15 | 19 | 19 | 11 | 10 | 8 | 8 | 6 | 5 | 15 | 11 | 5 | 4 | 2.5 | 80 | 120 |
| 120 | 150 | 0 | –25 | 0 | –18 | 0 | –13 | 0 | –10 | 0 | –7 | 0 | –10 | 0 | –7 | 31 | 31 | 19 | 23 | 23 | 14 | 13 | 10 | 10 | 8 | 7 | 19 | 14 | 7 | 5 | 3.5 | 120 | 150 |
| 150 | 180 | 0 | –25 | 0 | –18 | 0 | –13 | 0 | –10 | 0 | –7 | 0 | –10 | 0 | –7 | 31 | 31 | 19 | 23 | 23 | 14 | 13 | 10 | 10 | 8 | 7 | 19 | 14 | 7 | 5 | 3.5 | 150 | 180 |
| 180 | 250 | 0 | –30 | 0 | –22 | 0 | –15 | 0 | –12 | 0 | –8 | 0 | –12 | 0 | –8 | 38 | 38 | 23 | 28 | 28 | 17 | 15 | 12 | 12 | 9 | 8 | 23 | 17 | 8 | 6 | 4 | 180 | 250 |
| 250 | 315 | 0 | –35 | 0 | –25 | 0 | –18 | — | — | — | — | — | — | — | — | 44 | 44 | 26 | 31 | 31 | 19 | 18 | 14 | — | — | — | 26 | 19 | 9 | — | — | 250 | 315 |
| 315 | 400 | 0 | –40 | 0 | –30 | 0 | –23 | — | — | — | — | — | — | — | — | 50 | 50 | 30 | 38 | 38 | 23 | 23 | 18 | — | — | — | 30 | 23 | 12 | — | — | 315 | 400 |
| 400 | 500 | 0 | –45 | 0 | –35 | — | — | — | — | — | — | — | — | — | — | 56 | 56 | 34 | 44 | 44 | 26 | — | — | — | — | — | 34 | 26 | — | — | — | 400 | 500 |
| 500 | 630 | 0 | –50 | 0 | –40 | — | — | — | — | — | — | — | — | — | — | 63 | 63 | 38 | 50 | 50 | 30 | — | — | — | — | — | 38 | 30 | — | — | — | 500 | 630 |
| 630 | 800 | 0 | –75 | — | — | — | — | — | — | — | — | — | — | — | — | — | — | — | — | — | — | — | — | — | — | — | — | — | — | — | — | 630 | 800 |
| 800 | 1000 | 0 | –100 | — | — | — | — | — | — | — | — | — | — | — | — | — | — | — | — | — | — | — | — | — | — | — | — | — | — | — | — | 800 | 1000 |
| 1000 | 1250 | 0 | –125 | — | — | — | — | — | — | — | — | — | — | — | — | — | — | — | — | — | — | — | — | — | — | — | — | — | — | — | — | 1000 | 1250 |
| 1250 | 1600 | 0 | –160 | — | — | — | — | — | — | — | — | — | — | — | — | — | — | — | — | — | — | — | — | — | — | — | — | — | — | — | — | 1250 | 1600 |
| 1600 | 2000 | 0 | –200 | — | — | — | — | — | — | — | — | — | — | — | — | — | — | — | — | — | — | — | — | — | — | — | — | — | — | — | — | 1600 | 2000 |

Unit: μm

| Nominal bearing bore diameter d (mm) | | Deviation of a single inner ring width (or a single outer ring width) (3) $\Delta_{Bs}$ (or $\Delta_{Cs}$): Single bearing | | | | | | Paired or stack mounted bearing (4) | | | | Inner (or outer) ring width variation $V_{Bs}$ (or $V_{Cs}$): Inner (or outer) ring (3) | | | Inner ring | | Radial runout of assembled bearing inner ring $K_{ia}$ | | | | | Inner ring reference face runout with bore $S_d$ | | | Assembled bearing inner ring face runout with raceway (5) $S_{ia}$ | | | Nominal bearing bore diameter d (mm) | |
|---|---|---|---|---|---|---|---|---|---|---|---|---|---|---|---|---|---|---|---|---|---|---|---|---|---|---|---|---|---|---|
| | | Class 0 Class 6 | | Class 5 Class 4 | | Class 2 | | Class 0 Class 6 | | Class 5 Class 4 | | Class 0 | Class 6 | Class 5 | Class 4 | Class 2 | Class 0 | Class 6 | Class 5 | Class 4 | Class 2 | Class 5 | Class 4 | Class 2 | Class 5 | Class 4 | Class 2 | | |
| Over | Incl. | High | Low | High | Low | High | Low | High | Low | High | Low | Max | Max | Max | Max | Max | Max | Max | Max | Max | Max | Max | Max | Max | Max | Max | Max | Over | Incl. |
| 0.6(1) | 2.5 | 0 | –40 | 0 | –40 | 0 | –40 | — | — | 0 | –250 | 12 | 12 | 5 | 2.5 | 1.5 | 10 | 5 | 4 | 2.5 | 1.5 | 7 | 3 | 1.5 | 7 | 3 | 1.5 | 0.6(1) | 2.5 |
| 2.5 | 10 | 0 | –120 | 0 | –40 | 0 | –40 | 0 | –250 | 0 | –250 | 15 | 15 | 5 | 2.5 | 1.5 | 10 | 6 | 4 | 2.5 | 1.5 | 7 | 3 | 1.5 | 7 | 3 | 1.5 | 2.5 | 10 |
| 10 | 18 | 0 | –120 | 0 | –80 | 0 | –80 | 0 | –250 | 0 | –250 | 20 | 20 | 5 | 2.5 | 1.5 | 10 | 7 | 4 | 2.5 | 1.5 | 7 | 3 | 1.5 | 7 | 3 | 1.5 | 10 | 18 |
| 18 | 30 | 0 | –120 | 0 | –120 | 0 | –120 | 0 | –250 | 0 | –250 | 20 | 20 | 5 | 2.5 | 1.5 | 13 | 8 | 4 | 3 | 2.5 | 8 | 4 | 1.5 | 8 | 4 | 2.5 | 18 | 30 |
| 30 | 50 | 0 | –120 | 0 | –120 | 0 | –120 | 0 | –250 | 0 | –250 | 20 | 20 | 5 | 3 | 1.5 | 15 | 10 | 5 | 4 | 2.5 | 8 | 4 | 1.5 | 8 | 4 | 2.5 | 30 | 50 |
| 50 | 80 | 0 | –150 | 0 | –150 | 0 | –150 | 0 | –380 | 0 | –250 | 25 | 25 | 6 | 4 | 1.5 | 20 | 10 | 5 | 4 | 2.5 | 8 | 5 | 1.5 | 8 | 5 | 2.5 | 50 | 80 |
| 80 | 120 | 0 | –200 | 0 | –200 | 0 | –200 | 0 | –380 | 0 | –380 | 25 | 25 | 7 | 4 | 2.5 | 25 | 13 | 6 | 5 | 2.5 | 9 | 5 | 2.5 | 9 | 5 | 2.5 | 80 | 120 |
| 120 | 150 | 0 | –250 | 0 | –250 | 0 | –250 | 0 | –500 | 0 | –380 | 30 | 30 | 8 | 5 | 2.5 | 30 | 18 | 8 | 6 | 2.5 | 10 | 6 | 2.5 | 10 | 7 | 2.5 | 120 | 150 |
| 150 | 180 | 0 | –250 | 0 | –250 | 0 | –250 | 0 | –500 | 0 | –380 | 30 | 30 | 8 | 5 | 4 | 30 | 18 | 8 | 6 | 5 | 10 | 6 | 4 | 10 | 7 | 5 | 150 | 180 |
| 180 | 250 | 0 | –300 | 0 | –300 | 0 | –300 | 0 | –500 | 0 | –500 | 30 | 30 | 10 | 6 | 5 | 40 | 20 | 10 | 8 | 5 | 11 | 7 | 5 | 13 | 8 | 5 | 180 | 250 |
| 250 | 315 | 0 | –350 | 0 | –350 | — | — | 0 | –500 | 0 | –500 | 35 | 35 | 13 | — | — | 50 | 25 | 13 | — | — | 13 | — | — | 15 | — | — | 250 | 315 |
| 315 | 400 | 0 | –400 | 0 | –400 | — | — | 0 | –630 | 0 | –630 | 40 | 40 | 15 | — | — | 60 | 30 | 15 | — | — | 15 | — | — | 20 | — | — | 315 | 400 |
| 400 | 500 | 0 | –450 | — | — | — | — | — | — | — | — | 50 | 45 | — | — | — | 65 | 35 | — | — | — | — | — | — | — | — | — | 400 | 500 |
| 500 | 630 | 0 | –500 | — | — | — | — | — | — | — | — | 60 | 50 | — | — | — | 70 | 40 | — | — | — | — | — | — | — | — | — | 500 | 630 |
| 630 | 800 | 0 | –750 | — | — | — | — | — | — | — | — | 70 | — | — | — | — | 80 | — | — | — | — | — | — | — | — | — | — | 630 | 800 |
| 800 | 1000 | 0 | –1000 | — | — | — | — | — | — | — | — | 80 | — | — | — | — | 90 | — | — | — | — | — | — | — | — | — | — | 800 | 1000 |
| 1000 | 1250 | 0 | –1250 | — | — | — | — | — | — | — | — | 100 | — | — | — | — | 100 | — | — | — | — | — | — | — | — | — | — | 1000 | 1250 |
| 1250 | 1600 | 0 | –1600 | — | — | — | — | — | — | — | — | 120 | — | — | — | — | 120 | — | — | — | — | — | — | — | — | — | — | 1250 | 1600 |
| 1600 | 2000 | 0 | –2000 | — | — | — | — | — | — | — | — | 140 | — | — | — | — | 140 | — | — | — | — | — | — | — | — | — | — | 1600 | 2000 |

Notes: (1) 0.6 mm is included in this group.
(2) Applies to bearings with cylindrical bore.
(3) Width deviation and variation of outer ring are the same as inner ring. Outer ring width variation of classes 5, 4 and 2 are listed in Table 5.1.2.
(4) Applies to the rings of single bearings made for mounted bearings.
(5) Applies to ball bearings such as deep groove ball bearings and angular contact ball bearings

Remark: The high deviation of bearing bore diameter of cylindrical bore bearings does not apply within a distance from the ring face of 1.2 x r (max) of the chamfer.

NACHI

## Table 5.1.2 Tolerance Values of Outer Ring

Unit: μm

| Nominal bearing outside diameter D (mm) | | Bearing outside diameter | | | | | | | | | | | | | | | | | | | | | | | | | | | | | | Nominal bearing outside diameter D (mm) | |
|---|---|---|---|---|---|---|---|---|---|---|---|---|---|---|---|---|---|---|---|---|---|---|---|---|---|---|---|---|---|---|---|---|---|
| | | Single plane mean outside diameter deviation $\Delta D_{mp}$ | | | | | | | | | | Deviation of a single outside diameter $\Delta D_s$ | | | | Outside diameter variation in a single radial plane (2) $VD_p$ | | | | | | | | | | | | | | | | | |
| | | Class 0 | | Class 6 | | Class 5 | | Class 4 | | Class 2 | | Class 4 | | Class 2 | | Class 0 | | | | Class 6 | | | | Class 5 | | Class 4 | | Class 2 | | | |
| | | | | | | | | | | | | Diameter series | | | | Open bearing | | | Seal or shield bearings | Open bearing | | | Seal or shield bearings | Open bearing | | Open bearing | | | | | |
| | | | | | | | | | | | | | | | | Diameter series | | | | Diameter series | | | | Diameter series | | Diameter series | | Open bearing | | | |
| | | | | | | | | | | | | 0,1,2,3,4 | | | | 7,8,9 | 0,1 | 2,3,4 | 2,3,4 | 7,8,9 | 0,1 | 2,3,4 | 0,1,2,3,4 | 7,8,9 | 0,1,2,3,4 | 7,8,9 | 0,1,2,3,4 | | | | |
| Over | Incl. | High | Low | High | Low | High | Low | High | Low | High | Low | High | Low | High | Low | Max | | | Max | Max | | | Max | Max | | Max | | Max | | Over | Incl. |
| 2.5(1) | 6 | 0 | –8 | 0 | –7 | 0 | –5 | 0 | –4 | 0 | –2.5 | 0 | –4 | 0 | –2.5 | 10 | 8 | 6 | 10 | 9 | 7 | 5 | 9 | 5 | 4 | 4 | 3 | 2.5 | 2.5(1) | 6 |
| 6 | 18 | 0 | –8 | 0 | –7 | 0 | –5 | 0 | –4 | 0 | –2.5 | 0 | –4 | 0 | –2.5 | 10 | 8 | 6 | 10 | 9 | 7 | 5 | 9 | 5 | 4 | 4 | 3 | 2.5 | 6 | 18 |
| 18 | 30 | 0 | –9 | 0 | –8 | 0 | –6 | 0 | –5 | 0 | –4 | 0 | –5 | 0 | –4 | 12 | 9 | 7 | 12 | 10 | 8 | 6 | 10 | 6 | 5 | 5 | 4 | 4 | 18 | 30 |
| 30 | 50 | 0 | –11 | 0 | –9 | 0 | –7 | 0 | –6 | 0 | –4 | 0 | –6 | 0 | –4 | 14 | 11 | 8 | 16 | 11 | 9 | 7 | 13 | 7 | 5 | 6 | 5 | 4 | 30 | 50 |
| 50 | 80 | 0 | –13 | 0 | –11 | 0 | –9 | 0 | –7 | 0 | –4 | 0 | –7 | 0 | –4 | 16 | 13 | 10 | 20 | 14 | 11 | 8 | 16 | 9 | 7 | 7 | 5 | 4 | 50 | 80 |
| 80 | 120 | 0 | –15 | 0 | –13 | 0 | –10 | 0 | –8 | 0 | –5 | 0 | –8 | 0 | –5 | 19 | 19 | 11 | 26 | 16 | 16 | 10 | 20 | 10 | 8 | 8 | 6 | 5 | 80 | 120 |
| 120 | 150 | 0 | –18 | 0 | –15 | 0 | –11 | 0 | –9 | 0 | –5 | 0 | –9 | 0 | –5 | 23 | 23 | 14 | 30 | 19 | 19 | 11 | 25 | 11 | 8 | 9 | 7 | 5 | 120 | 150 |
| 150 | 180 | 0 | –25 | 0 | –18 | 0 | –13 | 0 | –10 | 0 | –7 | 0 | –10 | 0 | –7 | 31 | 31 | 19 | 38 | 23 | 23 | 14 | 30 | 13 | 10 | 10 | 8 | 7 | 150 | 180 |
| 180 | 250 | 0 | –30 | 0 | –20 | 0 | –15 | 0 | –11 | 0 | –8 | 0 | –11 | 0 | –8 | 38 | 38 | 23 | — | 25 | 25 | 15 | — | 15 | 11 | 11 | 8 | 8 | 180 | 250 |
| 250 | 315 | 0 | –35 | 0 | –25 | 0 | –18 | 0 | –13 | 0 | –8 | 0 | –13 | 0 | –8 | 44 | 44 | 26 | — | 31 | 31 | 19 | — | 18 | 14 | 13 | 10 | 8 | 250 | 315 |
| 315 | 400 | 0 | –40 | 0 | –28 | 0 | –20 | 0 | –15 | 0 | –10 | 0 | –15 | 0 | –10 | 50 | 50 | 30 | — | 35 | 35 | 21 | — | 20 | 15 | 15 | 11 | 10 | 315 | 400 |
| 400 | 500 | 0 | –45 | 0 | –33 | 0 | –23 | — | — | — | — | — | — | — | — | 56 | 56 | 34 | — | 41 | 41 | 25 | — | 23 | 17 | — | — | — | 400 | 500 |
| 500 | 630 | 0 | –50 | 0 | –38 | 0 | –28 | — | — | — | — | — | — | — | — | 63 | 63 | 38 | — | 48 | 48 | 29 | — | 28 | 21 | — | — | — | 500 | 630 |
| 630 | 800 | 0 | –75 | 0 | –45 | 0 | –35 | — | — | — | — | — | — | — | — | 94 | 94 | 55 | — | 56 | 56 | 34 | — | 35 | 26 | — | — | — | 630 | 800 |
| 800 | 1000 | 0 | –100 | 0 | –60 | — | — | — | — | — | — | — | — | — | — | 125 | 125 | 75 | — | 75 | 75 | 45 | — | — | — | — | — | — | 800 | 1000 |
| 1000 | 1250 | 0 | –125 | — | — | — | — | — | — | — | — | — | — | — | — | — | — | — | — | — | — | — | — | — | — | — | — | — | 1000 | 1250 |
| 1250 | 1600 | 0 | –160 | — | — | — | — | — | — | — | — | — | — | — | — | — | — | — | — | — | — | — | — | — | — | — | — | — | 1250 | 1600 |
| 1600 | 2000 | 0 | –200 | — | — | — | — | — | — | — | — | — | — | — | — | — | — | — | — | — | — | — | — | — | — | — | — | — | 1600 | 2000 |
| 2000 | 2500 | 0 | –250 | — | — | — | — | — | — | — | — | — | — | — | — | — | — | — | — | — | — | — | — | — | — | — | — | — | 2000 | 2500 |

Unit: μm

| Nominal bearing outside diameter D (mm) | | Bearing outside diameter | | | | | Radial runout of assembled bearing outer ring $K_{ea}$ | | | | | Variation of bearing outside suface generarix inclination with outer ring reference face $S_D$ | | | Assembled bearing outer ring face runout with raceway (3) $S_{ea}$ | | | Outer ring width variation (4) $V_{Cs}$ | | | Nominal bearing outside diameter D (mm) | |
|---|---|---|---|---|---|---|---|---|---|---|---|---|---|---|---|---|---|---|---|---|---|---|
| | | Mean outside diameter variation (2) $V_{Dmp}$ | | | | | | | | | | | | | | | | | | | | |
| | | Class 0 | Class 6 | Class 5 | Class 4 | Class 2 | Class 0 | Class 6 | Class 5 | Class 4 | Class 2 | Class 5 | Class 4 | Class 2 | Class 5 | Class 4 | Class 2 | Class 5 | Class 4 | Class 2 | | |
| Over | Incl. | Max | Max | Max | Max | Max | Max | Max | Max | Max | Max | Max | Max | Max | Max | Max | Max | Max | Max | Max | Over | Incl. |
| 2.5(1) | 6 | 6 | 5 | 3 | 2 | 1.5 | 15 | 8 | 5 | 3 | 1.5 | 8 | 4 | 1.5 | 8 | 5 | 1.5 | 5 | 2.5 | 1.5 | 2.5(1) | 6 |
| 6 | 18 | 6 | 5 | 3 | 2 | 1.5 | 15 | 8 | 5 | 3 | 1.5 | 8 | 4 | 1.5 | 8 | 5 | 1.5 | 5 | 2.5 | 1.5 | 6 | 18 |
| 18 | 30 | 7 | 6 | 3 | 2.5 | 2 | 15 | 9 | 6 | 4 | 2.5 | 8 | 4 | 1.5 | 8 | 5 | 2.5 | 5 | 2.5 | 1.5 | 18 | 30 |
| 30 | 50 | 8 | 7 | 4 | 3 | 2 | 20 | 10 | 7 | 5 | 2.5 | 8 | 4 | 1.5 | 8 | 5 | 2.5 | 5 | 2.5 | 1.5 | 30 | 50 |
| 50 | 80 | 10 | 8 | 5 | 3.5 | 2 | 25 | 13 | 8 | 5 | 4 | 8 | 4 | 1.5 | 10 | 5 | 4 | 6 | 3 | 1.5 | 50 | 80 |
| 80 | 120 | 11 | 10 | 5 | 4 | 2.5 | 35 | 18 | 10 | 6 | 5 | 9 | 5 | 2.5 | 11 | 6 | 5 | 8 | 4 | 2.5 | 80 | 120 |
| 120 | 150 | 14 | 11 | 6 | 5 | 2.5 | 40 | 20 | 11 | 7 | 5 | 10 | 5 | 2.5 | 13 | 7 | 5 | 8 | 5 | 2.5 | 120 | 150 |
| 150 | 180 | 19 | 14 | 7 | 5 | 3.5 | 45 | 23 | 13 | 8 | 5 | 10 | 5 | 2.5 | 14 | 8 | 5 | 8 | 5 | 2.5 | 150 | 180 |
| 180 | 250 | 23 | 15 | 8 | 6 | 4 | 50 | 25 | 15 | 10 | 7 | 11 | 7 | 4 | 15 | 10 | 7 | 10 | 7 | 4 | 180 | 250 |
| 250 | 315 | 26 | 19 | 9 | 7 | 4 | 60 | 30 | 18 | 11 | 7 | 13 | 8 | 5 | 18 | 10 | 7 | 11 | 7 | 5 | 250 | 315 |
| 315 | 400 | 30 | 21 | 10 | 8 | 5 | 70 | 35 | 20 | 13 | 8 | 13 | 10 | 7 | 20 | 13 | 8 | 13 | 8 | 7 | 315 | 400 |
| 400 | 500 | 34 | 25 | 12 | — | — | 80 | 40 | 23 | — | — | 15 | — | — | 23 | — | — | 15 | — | — | 400 | 500 |
| 500 | 630 | 38 | 29 | 14 | — | — | 100 | 50 | 25 | — | — | 18 | — | — | 25 | — | — | 18 | — | — | 500 | 630 |
| 630 | 800 | 55 | 34 | 18 | — | — | 120 | 60 | 30 | — | — | 20 | — | — | 30 | — | — | 20 | — | — | 630 | 800 |
| 800 | 1000 | 75 | 45 | — | — | — | 140 | 75 | — | — | — | — | — | — | — | — | — | — | — | — | 800 | 1000 |
| 1000 | 1250 | — | — | — | — | — | 160 | — | — | — | — | — | — | — | — | — | — | — | — | — | 1000 | 1250 |
| 1250 | 1600 | — | — | — | — | — | 190 | — | — | — | — | — | — | — | — | — | — | — | — | — | 1250 | 1600 |
| 1600 | 2000 | — | — | — | — | — | 220 | — | — | — | — | — | — | — | — | — | — | — | — | — | 1600 | 2000 |
| 2000 | 2500 | — | — | — | — | — | 250 | — | — | — | — | — | — | — | — | — | — | — | — | — | 2000 | 2500 |

Notes: (1) 2.5 mm is included in this group.
(2) Applies if snap ring is not mounted.
(3) Applies to ball bearings such as deep groove ball bearings and angular contact ball bearings.
Outer ring width variation of classes 0 and 6 are listed in Table 5.1.1.

Remark: The low deviation of outside diameter of bearings does not apply within a distance from the ring face of 1.2 x r (max) of the chamfer.

# 5.2 Tolerance Values for Metric Tapered Roller Bearings

## Table 5.2.1 Tolerance Values of Inner Ring

Unit: μm

| Nominal bearing bore diameter d (mm) | | Bearing bore diameter: Single plane mean bore diameter deviation $\Delta d_{mp}$ | | | | | | Deviation of a single bore diameter $\Delta d_s$ | | Bore diameter variation in a single radial plane $V_{dp}$ | | | | Mean bore diameter variation $V_{dmp}$ | | | | Radial runout of assembled bearing inner ring $K_{ia}$ | | | | Inner ring reference face runout with bore $S_d$ | | Assembled bearing inner ring face runout with raceway $S_{ia}$ |
|---|---|---|---|---|---|---|---|---|---|---|---|---|---|---|---|---|---|---|---|---|---|---|---|---|
| | | Class 0 Class 6X | | Class 6 Class 5 | | Class 4 | | Class 4 | | Class 0 Class 6X | Class 6 | Class 5 | Class 4 | Class 0 Class 6X | Class 6 | Class 5 | Class 4 | Class 0 Class 6X | Class 6 | Class 5 | Class 4 | Class 5 | Class 4 | Class 4 |
| Over | Incl. | High | Low | High | Low | High | Low | High | Low | Max | Max | Max | Max | Max | Max | Max | Max | Max | Max | Max | Max | Max | Max | Max |
| 10 | 18 | 0 | −12 | 0 | −7 | 0 | −5 | 0 | −5 | 12 | 7 | 5 | 4 | 9 | 5 | 5 | 4 | 15 | 7 | 5 | 3 | 7 | 3 | 3 |
| 18 | 30 | 0 | −12 | 0 | −8 | 0 | −6 | 0 | −6 | 12 | 8 | 6 | 5 | 9 | 6 | 5 | 4 | 18 | 8 | 5 | 3 | 8 | 4 | 4 |
| 30 | 50 | 0 | −12 | 0 | −10 | 0 | −8 | 0 | −8 | 12 | 10 | 8 | 6 | 9 | 8 | 5 | 5 | 20 | 10 | 6 | 4 | 8 | 4 | 4 |
| 50 | 80 | 0 | −15 | 0 | −12 | 0 | −9 | 0 | −9 | 15 | 12 | 9 | 7 | 11 | 9 | 6 | 5 | 25 | 10 | 7 | 4 | 8 | 5 | 4 |
| 80 | 120 | 0 | −20 | 0 | −15 | 0 | −10 | 0 | −10 | 20 | 15 | 11 | 8 | 15 | 11 | 8 | 5 | 30 | 13 | 8 | 5 | 9 | 5 | 5 |
| 120 | 180 | 0 | −25 | 0 | −18 | 0 | −13 | 0 | −13 | 25 | 18 | 14 | 10 | 19 | 14 | 9 | 7 | 35 | 18 | 11 | 6 | 10 | 6 | 7 |
| 180 | 250 | 0 | −30 | 0 | −22 | 0 | −15 | 0 | −15 | 30 | 22 | 17 | 11 | 23 | 16 | 11 | 8 | 50 | 20 | 13 | 8 | 11 | 7 | 8 |
| 250 | 315 | 0 | −35 | — | — | — | — | — | — | 35 | — | — | — | 26 | — | — | — | 60 | — | — | — | — | — | — |
| 315 | 400 | 0 | −40 | — | — | — | — | — | — | 40 | — | — | — | 30 | — | — | — | 70 | — | — | — | — | — | — |
| 400 | 500 | 0 | −45 | — | — | — | — | — | — | — | — | — | — | — | — | — | — | 70 | — | — | — | — | — | — |
| 500 | 630 | 0 | −50 | — | — | — | — | — | — | — | — | — | — | — | — | — | — | 85 | — | — | — | — | — | — |
| 630 | 800 | 0 | −75 | — | — | — | — | — | — | — | — | — | — | — | — | — | — | 100 | — | — | — | — | — | — |

Remarks: 1. The high deviation of inside diameter of bearings does not apply within a distance from the ring face of 1.2 x r (max) of the chamfer.
2. Part of this table is derived from NACHI standards

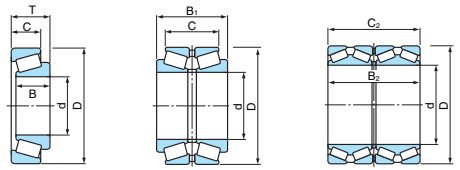


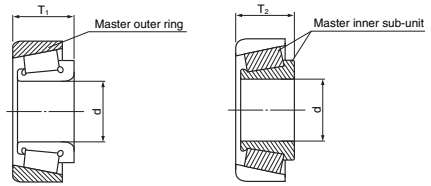


## Table 5.2.2 Tolerance Values of Outer Ring

Unit: μm

| Nominal bearing outside diameter D (mm) | | Bearing outside diameter: Single plane mean outside diameter deviation $\Delta D_{mp}$ | | | | | | Deviation of a single outside diameter $\Delta D_s$ | | Outside diameter variation in a single radial plane $V_{Dp}$ | | | | Mean outside diameter variation $V_{Dmp}$ | | | | Radial runout of assembled bearing outer ring $K_{ea}$ | | | | Variation of bearing outside surface generatrix inclination with outer ring reference face $S_D$ | | Assembled bearing outer ring face runout with raceway $S_{ea}$ |
|---|---|---|---|---|---|---|---|---|---|---|---|---|---|---|---|---|---|---|---|---|---|---|---|---|
| | | Class 0 Class 6X | | Class 6 Class 5 | | Class 4 | | Class 4 | | Class 0 Class 6X | Class 6 | Class 5 | Class 4 | Class 0 Class 6X | Class 6 | Class 5 | Class 4 | Class 0 Class 6X | Class 6 | Class 5 | Class 4 | Class 5 | Class 4 | Class 4 |
| Over | Incl. | High | Low | High | Low | High | Low | High | Low | Max | Max | Max | Max | Max | Max | Max | Max | Max | Max | Max | Max | Max | Max | Max |
| 18 | 30 | 0 | −12 | 0 | −8 | 0 | −6 | 0 | −6 | 12 | 8 | 6 | 5 | 9 | 6 | 5 | 4 | 18 | 9 | 6 | 4 | 8 | 4 | 5 |
| 30 | 50 | 0 | −14 | 0 | −9 | 0 | −7 | 0 | −7 | 14 | 9 | 7 | 5 | 11 | 7 | 5 | 5 | 20 | 10 | 7 | 5 | 8 | 4 | 5 |
| 50 | 80 | 0 | −16 | 0 | −11 | 0 | −9 | 0 | −9 | 16 | 11 | 8 | 7 | 12 | 8 | 6 | 5 | 25 | 13 | 8 | 5 | 8 | 4 | 5 |
| 80 | 120 | 0 | −18 | 0 | −13 | 0 | −10 | 0 | −10 | 18 | 13 | 10 | 8 | 14 | 10 | 7 | 5 | 35 | 18 | 10 | 6 | 9 | 5 | 6 |
| 120 | 150 | 0 | −20 | 0 | −15 | 0 | −11 | 0 | −11 | 20 | 15 | 11 | 8 | 15 | 11 | 8 | 6 | 40 | 20 | 11 | 7 | 10 | 5 | 7 |
| 150 | 180 | 0 | −25 | 0 | −18 | 0 | −13 | 0 | −13 | 25 | 18 | 14 | 10 | 19 | 14 | 9 | 7 | 45 | 23 | 13 | 8 | 10 | 5 | 8 |
| 180 | 250 | 0 | −30 | 0 | −20 | 0 | −15 | 0 | −15 | 30 | 20 | 15 | 11 | 23 | 15 | 10 | 8 | 50 | 25 | 15 | 10 | 11 | 7 | 10 |
| 250 | 315 | 0 | −35 | 0 | −25 | 0 | −18 | 0 | −18 | 35 | 25 | 19 | 14 | 26 | 19 | 13 | 9 | 60 | 30 | 18 | 11 | 13 | 8 | 10 |
| 315 | 400 | 0 | −40 | 0 | −28 | 0 | −20 | 0 | −20 | 40 | 28 | 22 | 15 | 30 | 21 | 14 | 10 | 70 | 35 | 20 | 13 | 13 | 10 | 13 |
| 400 | 500 | 0 | −45 | — | — | — | — | — | — | 45 | — | — | — | 34 | — | — | — | 80 | — | — | — | — | — | — |
| 500 | 630 | 0 | −50 | — | — | — | — | — | — | 50 | — | — | — | 38 | — | — | — | 100 | — | — | — | — | — | — |
| 630 | 800 | 0 | −75 | — | — | — | — | — | — | — | — | — | — | — | — | — | — | 120 | — | — | — | — | — | — |
| 800 | 1000 | 0 | −100 | — | — | — | — | — | — | — | — | — | — | — | — | — | — | 120 | — | — | — | — | — | — |

Remarks: 1. The low deviation of outside diameter of bearings does not apply within a distance from the ring face of 1.2 x r (max) of the chamfer.
2. Part of this table is derived from NACHI standards

## Table 5.2.3 Deviations of Single Ring Width, Bearing Width and Duplex/Stack Mounted Bearing Width

Unit: μm

| Nominal bearing bore diameter d (mm) | | Deviation of a single inner ring width $\Delta B_s$ | | | | | | Deviation of a single outer ring width $\Delta C_s$ | | | | | | Deviation of a actual bearing width $\Delta T_s$ | | | | | | Deviation of the actual effective width of inner sub-unit $\Delta T_{1s}$ | | | | Deviation of the actual effective width of outer sub-unit $\Delta T_{2s}$ | | | | Deviation of duplex/stack mounted bearing width | | | | Nominal bearing bore diameter d (mm) | |
|---|---|---|---|---|---|---|---|---|---|---|---|---|---|---|---|---|---|---|---|---|---|---|---|---|---|---|---|---|---|---|---|---|---|
| | | Class 0 Class 6 | | Class 6X | | Class 5 Class 4 | | Class 0 Class 6 | | Class 6X | | Class 5 Class 4 | | Class 0 Class 6 | | Class 6X | | Class 5 Class 4 | | Class 0 | | Class 6X | | Class 0 | | Class 6X | | $\Delta B_{2s}$ | | $\Delta B_{2s}$ · $\Delta C_{2s}$ | | | |
| | | | | | | | | | | | | | | | | | | | | | | | | | | | | Duplex mounted bearing class 0 | | Four row bearing class 0 | | | |
| Over | Incl. | High | Low | High | Low | High | Low | High | Low | High | Low | High | Low | High | Low | High | Low | High | Low | High | Low | High | Low | High | Low | High | Low | High | Low | High | Low | Over | Incl. |
| 10 | 18 | 0 | −120 | 0 | −50 | 0 | −200 | 0 | −120 | 0 | −100 | 0 | −200 | +200 | 0 | +100 | 0 | +200 | −200 | +100 | 0 | +50 | 0 | +100 | 0 | +50 | 0 | +200 | −200 | — | — | 10 | 18 |
| 18 | 30 | 0 | −120 | 0 | −50 | 0 | −200 | 0 | −120 | 0 | −100 | 0 | −200 | +200 | 0 | +100 | 0 | +200 | −200 | +100 | 0 | +50 | 0 | +100 | 0 | +50 | 0 | +200 | −200 | — | — | 18 | 30 |
| 30 | 50 | 0 | −120 | 0 | −50 | 0 | −240 | 0 | −120 | 0 | −100 | 0 | −240 | +200 | 0 | +100 | 0 | +200 | −200 | +100 | 0 | +50 | 0 | +100 | 0 | +50 | 0 | +240 | −240 | — | — | 30 | 50 |
| 50 | 80 | 0 | −150 | 0 | −50 | 0 | −300 | 0 | −150 | 0 | −100 | 0 | −300 | +200 | 0 | +100 | 0 | +200 | −200 | +100 | 0 | +50 | 0 | +100 | 0 | +50 | 0 | +300 | −300 | +400 | −400 | 50 | 80 |
| 80 | 120 | 0 | −200 | 0 | −50 | 0 | −400 | 0 | −200 | 0 | −100 | 0 | −400 | +200 | −200 | +100 | 0 | +200 | −200 | +100 | −100 | +50 | 0 | +100 | −100 | +50 | 0 | +400 | −400 | +500 | −500 | 80 | 120 |
| 120 | 180 | 0 | −250 | 0 | −50 | 0 | −500 | 0 | −250 | 0 | −100 | 0 | −500 | +350 | −250 | +150 | 0 | +350 | −250 | +150 | −150 | +50 | 0 | +200 | −100 | +100 | 0 | +500 | −500 | +600 | −600 | 120 | 180 |
| 180 | 250 | 0 | −300 | 0 | −50 | 0 | −600 | 0 | −300 | 0 | −100 | 0 | −600 | +350 | −250 | +150 | 0 | +350 | −250 | +150 | −150 | +50 | 0 | +200 | −100 | +100 | 0 | +600 | −600 | +750 | −750 | 180 | 250 |
| 250 | 315 | 0 | −350 | 0 | −50 | — | — | 0 | −350 | 0 | −100 | — | — | +350 | −250 | +200 | 0 | — | — | +150 | −150 | +100 | 0 | +200 | −100 | +100 | 0 | +700 | −700 | +900 | −900 | 250 | 315 |
| 315 | 400 | 0 | −400 | 0 | −50 | — | — | 0 | −400 | 0 | −100 | — | — | +400 | −400 | +200 | 0 | — | — | +200 | −200 | +100 | 0 | +200 | −200 | +100 | 0 | +800 | −800 | +1000 | −1000 | 315 | 400 |
| 400 | 500 | 0 | −450 | — | — | — | — | 0 | −450 | — | — | — | — | +400 | −400 | — | — | — | — | — | — | — | — | — | — | — | — | +900 | −900 | +1200 | −1200 | 400 | 500 |
| 500 | 630 | 0 | −500 | — | — | — | — | 0 | −500 | — | — | — | — | +500 | −500 | — | — | — | — | — | — | — | — | — | — | — | — | +1000 | −1000 | +1200 | −1200 | 500 | 630 |
| 630 | 800 | 0 | −750 | — | — | — | — | 0 | −750 | — | — | — | — | +600 | −600 | — | — | — | — | — | — | — | — | — | — | — | — | +1500 | −1500 | +1500 | −1500 | 630 | 800 |

Remarks: Effective width of an inner sub-unit $T_1$ is the bearing width obtained when this sub-unit is mated with a master outer ring.
Effective width of an outer ring $T_2$ is the bearing width obtained when this ring is mated with a master inner sub-unit.

# 5.3 Tolerance Values for Thrust Ball Bearings

### Table 5.3.1 Tolerance Values of Shaft Washer Bore Diameter

Unit: μm

| Nominal bearing bore diameter d or d2 (mm) | | Single plane mean bore diameter deviation $\Delta d_{mp}$ or $\Delta d_{2mp}$ | | | | Bore diameter variation, in a single radial plane $V_{dp}$ or $V_{d2p}$ | | Washer thickness (raceway to back face or raceway) variation (1) $S_i$ or $S_e$ | | | |
|---|---|---|---|---|---|---|---|---|---|---|---|
| | | Class 0 Class 6 Class 5 | | Class 4 | | Class 0 Class 6 Class 5 | Class 4 | Class 0 | Class 6 | Class 5 | Class 4 |
| Over | Incl. | High | Low | High | Low | Max | Max | Max | Max | Max | Max |
| — | 18 | 0 | −8 | 0 | −7 | 6 | 5 | 10 | 5 | 3 | 2 |
| 18 | 30 | 0 | −10 | 0 | −8 | 8 | 6 | 10 | 5 | 3 | 2 |
| 30 | 50 | 0 | −12 | 0 | −10 | 9 | 8 | 10 | 6 | 3 | 2 |
| 50 | 80 | 0 | −15 | 0 | −12 | 11 | 9 | 10 | 7 | 4 | 3 |
| 80 | 120 | 0 | −20 | 0 | −15 | 15 | 11 | 15 | 8 | 4 | 3 |
| 120 | 180 | 0 | −25 | 0 | −18 | 19 | 14 | 15 | 9 | 5 | 4 |
| 180 | 250 | 0 | −30 | 0 | −22 | 23 | 17 | 20 | 10 | 5 | 4 |
| 250 | 315 | 0 | −35 | 0 | −25 | 26 | 19 | 25 | 13 | 7 | 5 |
| 315 | 400 | 0 | −40 | 0 | −30 | 30 | 23 | 30 | 15 | 7 | 5 |
| 400 | 500 | 0 | −45 | 0 | −35 | 34 | 26 | 30 | 18 | 9 | 6 |
| 500 | 630 | 0 | −50 | 0 | −40 | 38 | 30 | 35 | 21 | 11 | 7 |
| 630 | 800 | 0 | −75 | 0 | −50 | — | — | 40 | 25 | 13 | 8 |
| 800 | 1000 | 0 | −100 | — | — | — | — | 45 | 30 | 15 | — |
| 1000 | 1250 | 0 | −125 | — | — | — | — | 50 | 35 | 18 | — |

### Table 5.3.2 Tolerance Values of Housing Washer Outside Diameter

Unit: μm

| Nominal bearing outside diameter D (mm) | | Mean outside diameter deviation, in a single plane $\Delta D_{mp}$ | | | | Outside diameter variation in a single radial plane $V_{Dp}$ | |
|---|---|---|---|---|---|---|---|
| | | Class 0 Class 6 Class 5 | | Class 4 | | Class 0 Class 6 Class 5 | Class 4 |
| Over | Incl. | High | Low | High | Low | Max | Max |
| 10 | 18 | 0 | −11 | 0 | −7 | 8 | 5 |
| 18 | 30 | 0 | −13 | 0 | −8 | 10 | 6 |
| 30 | 50 | 0 | −16 | 0 | −9 | 12 | 7 |
| 50 | 80 | 0 | −19 | 0 | −11 | 14 | 8 |
| 80 | 120 | 0 | −22 | 0 | −13 | 17 | 10 |
| 120 | 180 | 0 | −25 | 0 | −15 | 19 | 11 |
| 180 | 250 | 0 | −30 | 0 | −20 | 23 | 15 |
| 250 | 315 | 0 | −35 | 0 | −25 | 26 | 19 |
| 315 | 400 | 0 | −40 | 0 | −28 | 30 | 21 |
| 400 | 500 | 0 | −45 | 0 | −33 | 34 | 25 |
| 500 | 630 | 0 | −50 | 0 | −38 | 38 | 29 |
| 630 | 800 | 0 | −75 | 0 | −45 | 55 | 34 |
| 800 | 1000 | 0 | −100 | — | — | 75 | — |
| 1000 | 1250 | 0 | −125 | — | — | — | — |
| 1250 | 1600 | 0 | −160 | — | — | — | — |

Note: (1) For double acting bearings, do not use $d_2$, use size classification d for the same diameter series and same outside diameter. Variation $S_e$ for outer ring washer thickness applies to flat seat bearings only.

### Table 5.3.3 Height Tolerances of Thrust Ball Bearings (with Flat Seat) and Central Washers (Class 0)

Unit: μm

| Nominal bearing bore diameter d (1) (mm) | | Deviation of single height, T $\Delta T_s$ | | Deviation of single height, T2 of double direction rhrust bearing (1) $\Delta T_{2s}$ | | Deviation of single height, T1 of double direction rhrust bearing (1) $\Delta T_{1s}$ | | Deviation of center washer height T1 (1) $\Delta B_s$ | |
|---|---|---|---|---|---|---|---|---|---|
| Over | Incl. | High | Low | High | Low | Max | Max | Max | Max |
| — | 30 | 0 | −75 | 0 | −75 | +50 | −150 | 0 | −50 |
| 30 | 50 | 0 | −100 | 0 | −100 | +75 | −200 | 0 | −75 |
| 50 | 80 | 0 | −125 | 0 | −125 | +100 | −250 | 0 | −100 |
| 80 | 120 | 0 | −150 | 0 | −150 | +125 | −300 | 0 | −125 |
| 120 | 180 | 0 | −175 | 0 | −175 | +150 | −350 | 0 | −150 |
| 180 | 250 | 0 | −200 | 0 | −200 | +175 | −400 | 0 | −175 |
| 250 | 315 | 0 | −225 | 0 | −225 | +200 | −450 | 0 | −200 |
| 315 | 400 | 0 | −300 | 0 | −300 | +250 | −600 | 0 | −250 |

Note: (1) For the same diameter series, use size classification single-direction d for the same nominal bearing outside diameter.

# 5.4 Tolerance Values of Spherical Roller Thrust Bearings (Class 0)

### Table 5.4.1 Tolerance Values of Inner Rings

Unit: μm

| Nominal bearing bore diameter d (mm) | | Single plane mean bore diameter deviation $\Delta d_{mp}$ | | Bore diameter variation, in a single radial plane $V_{dp}$ | Inner ring reference face runout with bore $S_d$ | Deviation of single height $\Delta T_s$ | |
|---|---|---|---|---|---|---|---|
| Over | Incl. | High | Low | Max | Max | Max | Max |
| 50 | 80 | 0 | −15 | 11 | 25 | +150 | −150 |
| 80 | 120 | 0 | −20 | 15 | 25 | +200 | −200 |
| 120 | 180 | 0 | −25 | 19 | 30 | +250 | −250 |
| 180 | 250 | 0 | −30 | 23 | 30 | +300 | −300 |
| 250 | 315 | 0 | −35 | 26 | 35 | +350 | −350 |
| 315 | 400 | 0 | −40 | 30 | 40 | +400 | −400 |
| 400 | 500 | 0 | −45 | 34 | 45 | +450 | −450 |

Remark: The high deviation of inside diameter of bearings does not apply within a distance from the ring face of 1.2 x r (max) of the chamfer.

### Table 5.4.2 Tolerance Values of Outer Rings

Unit: μm

| Nominal bearing bore diameter D (mm) | | Outside diameter deviation $\Delta D_{mp}$ | |
|---|---|---|---|
| Over | Incl. | High | Low |
| 120 | 180 | 0 | −25 |
| 180 | 250 | 0 | −30 |
| 250 | 315 | 0 | −35 |
| 315 | 400 | 0 | −40 |
| 400 | 500 | 0 | −45 |
| 500 | 630 | 0 | −50 |
| 630 | 800 | 0 | −75 |
| 800 | 1000 | 0 | −100 |

Remark: The low deviation of outside diameter of bearings does not apply within a distance from the ring face of 1.2 x r (max) of the chamfer.





# 5.5 Tolerance Values of Tapered Roller Bearings - Inch Series

### Table 5.5.1 Tolerance of Inner Ring (Cone) Bore

Unit: μm

| Nominal bearing bore diameter d mm (inch) | | Deviation of single bore diameter $\Delta d_s$ | | | | | | | |
|---|---|---|---|---|---|---|---|---|---|
| | | CLASS 4 | | CLASS 3 | | CLASS 0 | | CLASS 00 | |
| Over | Incl. | High | Low | High | Low | High | Low | High | Low |
| — | 76.200 ( 3 ) | + 13 | 0 | +13 | 0 | +13 | 0 | +8 | 0 |
| 76.200 ( 3 ) | 266.700 (10.5) | + 25 | 0 | +13 | 0 | +13 | 0 | +8 | 0 |
| 266.700 (10.5) | 304.800 (12) | + 25 | 0 | +13 | 0 | +13 | 0 | +8 | 0 |
| 304.800 (12) | 609.600 (24) | + 51 | 0 | +25 | 0 | — | — | — | — |
| 609.600 (24) | 914.400 (36) | + 76 | 0 | +38 | 0 | — | — | — | — |
| 914.400 (36) | 1219.200 (48) | +102 | 0 | +51 | 0 | — | — | — | — |
| 1219.200 (48) | — | +127 | 0 | +76 | 0 | — | — | — | |

### Table 5.5.2 Tolerance of Outer Ring (Cup) Outside Diameter

Unit: μm

| Nominal bearing outside diameter D mm (inch) | | Deviation of single outside diameter $\Delta D_s$ | | | | | | | |
|---|---|---|---|---|---|---|---|---|---|
| | | CLASS 4 | | CLASS 3 | | CLASS 0 | | CLASS 00 | |
| Over | Incl. | High | Low | High | Low | High | Low | High | Low |
| — | 266.700 (10.5) | + 25 | 0 | +13 | 0 | +13 | 0 | +8 | 0 |
| 266.700 (10.5) | 304.800 (12) | + 25 | 0 | +13 | 0 | +13 | 0 | +8 | 0 |
| 304.800 (12) | 609.600 (24) | + 51 | 0 | +25 | 0 | — | — | — | — |
| 609.600 (24) | 914.400 (36) | + 76 | 0 | +38 | 0 | — | — | — | — |
| 914.400 (36) | 1219.200 (48) | +102 | 0 | +51 | 0 | — | — | — | — |
| 1219.200 (48) | — | +127 | 0 | +76 | 0 | — | — | — | — |

### Table 5.5.3 Tolerance of Bearing Width and Duplex/Stack Mounted Bearing Width (1)

Unit: μm

| Nominal bearing bore diameter d mm (inch) | | Nominal bearing outside diameter D mm (inch) | | Deviation of the actual bearing width $\Delta r_s$ | | | | | |
|---|---|---|---|---|---|---|---|---|---|
| | | | | CLASS 4 | | CLASS 3 | | CLASS 0 CLASS 00 | |
| Over | Incl. | Over | Incl. | High | Low | High | Low | High | Low |
| — | 101.600 ( 4 ) | — | — | +203 | 0 | +203 | −203 | +203 | −203 |
| 101.600 ( 4 ) | 266.700 (10.5) | — | — | +356 | −254 | +203 | −203 | +203 | −203 |
| 266.700 (10.5) | 304.800 (12) | — | — | +356 | −254 | +203 | −203 | +203 | −203 |
| 304.800 (12) | 609.600 (24) | — | 508.000 (20) | +381 | −381 | +203 | −203 | — | — |
| 304.800 (12) | 609.600 (24) | 508.000 (20) | — | +381 | −381 | +381 | −381 | — | — |
| 609.600 (24) | — | — | — | +381 | −381 | +381 | −381 | — | — |

Note: (1) Deviation of the mounted width $B_2$, and $C_2$ four row tapered roller bearing is ±1524 μm for the tolerance classes of 4,3 and 0.

### Table 5.5.4 Radial Runout of Assembled Bearing Inner Ring and Outer Ring

Unit: μm

| Nominal bearing outside diameter D mm (inch) | | Radial runout of assembled bearing inner ring $K_{ea}$ and of assembled bearing outer ring $K_{ea}$ (MAX) | | | |
|---|---|---|---|---|---|
| | | CLASS 4 | CLASS 3 | CLASS 0 | CLASS 00 |
| Over | Incl. | High | High | High | High |
| — | 266.700 (10.5) | 51 | 8 | 4 | 2 |
| 266.700 (10.5) | 304.800 (12) | 51 | 8 | 4 | 2 |
| 304.800 (12) | 609.600 (24) | 51 | 18 | — | — |
| 609.600 (24) | 914.400 (36) | 76 | 51 | — | — |
| 914.400 (36) | — | 76 | 76 | — | — |

# 5.6 Chamfer Dimension Limits

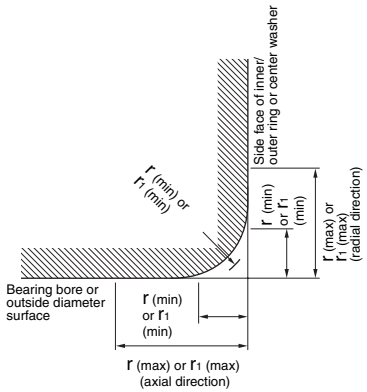


r : Chamfer dimensions of inner ring and outer ring
r1: Chamfer dimensions of inner ring and outer ring (front face etc.) or of center ring of thrust ball bearing

Remark: The exact shape of the chamfer surface is not specified, but its contour in an axial plane shall not be allowed to project beyond the imaginary circular arc, of radius r min, tangential to the ring face and the bore or outside cylindrical surface of the ring (see figure).

**Table 5.6.1 Chamfer Dimension Limits of Radial Bearings Except Tapered Roller Bearings**

Unit: mm

| Smallest permissible chamfer dimensions of inner and outer rings r (min) or r1 (min) | Nominal bearing bore diameter d | | Largest permissible chamfer dimensions of inner and outer rings r (max) or r1 (max) | | Reference Shaft and housing fillet radius ra |
|---|---|---|---|---|---|
| | Over | Incl. | Radial direction | Axial direction | Max |
| 0.05 | — | — | 0.1 | 0.2 | 0.05 |
| 0.08 | — | — | 0.16 | 0.3 | 0.08 |
| 0.1 | — | — | 0.2 | 0.4 | 0.1 |
| 0.15 | — | — | 0.3 | 0.6 | 0.15 |
| 0.2 | — | — | 0.5 | 0.8 | 0.2 |
| 0.3 | — | 40 | 0.6 | 1 | 0.3 |
| | 40 | — | 0.8 | 1 | |
| 0.6 | — | 40 | 1 | 2 | 0.6 |
| | 40 | — | 1.3 | 2 | |
| 1 | — | 50 | 1.5 | 3 | 1 |
| | 50 | — | 1.9 | 3 | |
| 1.1 | — | 120 | 2 | 3.5 | 1 |
| | 120 | — | 2.5 | 4 | |
| 1.5 | — | 120 | 2.3 | 4 | 1.5 |
| | 120 | — | 3 | 5 | |
| 2 | — | 80 | 3 | 4.5 | 2 |
| | 80 | 220 | 3.5 | 5 | |
| | 220 | — | 3.8 | 6 | |
| 2.1 | — | 280 | 4 | 6.5 | 2 |
| | 280 | — | 4.5 | 7 | |
| 2.5 | — | 100 | 3.8 | 6 | 2 |
| | 100 | 280 | 4.5 | 6 | |
| | 280 | — | 5 | 7 | |
| 3 | — | 280 | 5 | 8 | 2.5 |
| | 280 | — | 5.5 | 8 | |
| 4 | — | — | 6.5 | 9 | 3 |
| 5 | — | — | 8 | 10 | 4 |
| 6 | — | — | 10 | 13 | 5 |
| 7.5 | — | — | 12.5 | 17 | 6 |
| 9.5 | — | — | 15 | 19 | 8 |
| 12 | — | — | 18 | 24 | 10 |
| 15 | — | — | 21 | 30 | 12 |
| 19 | — | — | 25 | 38 | 15 |

Remark: For bearings with nominal width 2 mm or less, r (max) values in the axial direction of the bearing are the same as for the radial direction.





**Table 5.6.2 Chamfer Dimensions Limits of Tapered Roller Bearings**

Unit: mm

| Smallest permissible chamfer dimensions of inner and outer rings r (min) | Bearing bore diameter or outside diameter (1) d or D | | Largest permissible chamfer dimensions of inner and outer rings r (max) | | Reference Shaft and housing fillet radius ra |
|---|---|---|---|---|---|
| | Over | Incl. | Radial direction | Axial direction | Max |
| 0.3 | — | 40 | 0.7 | 1.4 | 0.3 |
| | 40 | — | 0.9 | 1.6 | |
| 0.6 | — | 40 | 1.1 | 1.7 | 0.6 |
| | 40 | — | 1.3 | 2 | |
| 1 | — | 50 | 1.6 | 2.5 | 1 |
| | 50 | — | 1.9 | 3 | |
| 1.5 | — | 120 | 2.3 | 3 | 1.5 |
| | 120 | 250 | 2.8 | 3.5 | |
| | 250 | — | 3.5 | 4 | |
| 2 | — | 120 | 2.8 | 4 | 2 |
| | 120 | 250 | 3.5 | 4.5 | |
| | 250 | — | 4 | 5 | |
| 2.5 | — | 120 | 3.5 | 5 | 2 |
| | 120 | 250 | 4 | 5.5 | |
| | 250 | — | 4.5 | 6 | |
| 3 | — | 120 | 4 | 5.5 | 2.5 |
| | 120 | 250 | 4.5 | 6.5 | |
| | 250 | 400 | 5 | 7 | |
| | 400 | — | 5.5 | 7.5 | |
| 4 | — | 120 | 5 | 7 | 3 |
| | 120 | 250 | 5.5 | 7.5 | |
| | 250 | 400 | 6 | 8 | |
| | 400 | — | 6.5 | 8.5 | |
| 5 | — | 180 | 6.5 | 8 | 4 |
| | 180 | — | 7.5 | 9 | |
| 6 | — | 180 | 7.5 | 10 | 5 |
| | 180 | — | 9 | 11 | |

Note: (1) d and D are applied to inner ring and outer ring respectively.

**Table 5.6.3 Chamfer Dimension Limits of Thrust Bearings**

Unit: mm

| Smallest permissible chamfer dimensions of inner and outer rings r (min) or r1 (min) | Largest permissible single chamfer dimensions of inner and outer rings r (max) or r1 (max) | Reference Shaft and housing fillet radius ra |
|---|---|---|
| | Radial direction and axial direction | Max |
| 0.05 | 0.1 | 0.05 |
| 0.08 | 0.16 | 0.08 |
| 0.1 | 0.2 | 0.1 |
| 0.15 | 0.3 | 0.15 |
| 0.2 | 0.5 | 0.2 |
| 0.3 | 0.8 | 0.3 |
| 0.6 | 1.5 | 0.6 |
| 1 | 2.2 | 1 |
| 1.1 | 2.7 | 1 |
| 1.5 | 3.5 | 1.5 |
| 2 | 4 | 2 |
| 2.1 | 4.5 | 2 |
| 3 | 5.5 | 2.5 |
| 4 | 6.5 | 3 |
| 5 | 8 | 4 |
| 6 | 10 | 5 |
| 7.5 | 12.5 | 6 |
| 9.5 | 15 | 8 |
| 12 | 18 | 10 |
| 15 | 21 | 12 |
| 19 | 25 | 15 |

## 5.7 Tolerances for Tapered Bores

d : Bearing bore diameter, nominal
$d_1$: Bore diameter at the theoretical large end of a tapered bore
in case of 1/12 taper $d_1=d+1/12B$
in case of 1/30 taper $d_1=d+1/30B$
$\Delta d_{mp}$: Mean bore diameter deviation at theoretical small end of a tapered bore
$\Delta d_{1mp}$: Mean bore diameter deviation at theoretical large end of a tapered bore
B: Bearing inner ring width, nominal
$\alpha$: Nominal taper angle (half of cone angle)
in case of 1/12 taper $\alpha$=2°23' 9.4"
=2.38594°
=0.041643 rad
in case of 1/30 taper $\alpha$=0°57' 17.4"
=0.95484°
=0.016665 rad

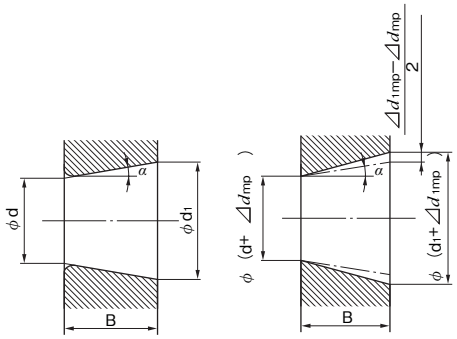


Theoretical tapered bore

Tapered bore with actual mean diameters at their deviations

**Table 5.7.1 1/12 Tapered Bore (Class 0)** Unit: μm

| Nominal bearing bore dimension d (mm) | | Mean bore diameter deviation at theoretical small end of a tapered bore | | | | Bore diameter variation in a single radial plane |
|---|---|---|---|---|---|---|
| | | $\Delta d_{mp}$ | | $\Delta d_{1mp}-\Delta d_{mp}$ | | $V_{dp}$ (1) (2) |
| Over | Incl. | High | Low | High | Low | Max |
| | 10 | + 22 | 0 | + 15 | 0 | 9 |
| 10 | 18 | + 27 | 0 | + 18 | 0 | 11 |
| 18 | 30 | + 33 | 0 | + 21 | 0 | 13 |
| 30 | 50 | + 39 | 0 | + 25 | 0 | 16 |
| 50 | 80 | + 46 | 0 | + 30 | 0 | 19 |
| 80 | 120 | + 54 | 0 | + 35 | 0 | 22 |
| 120 | 180 | + 63 | 0 | + 40 | 0 | 40 |
| 180 | 250 | + 72 | 0 | + 46 | 0 | 46 |
| 250 | 315 | + 81 | 0 | + 52 | 0 | 52 |
| 315 | 400 | + 89 | 0 | + 57 | 0 | 57 |
| 400 | 500 | + 97 | 0 | + 63 | 0 | 63 |
| 500 | 630 | +110 | 0 | + 70 | 0 | 70 |
| 630 | 800 | +125 | 0 | + 80 | 0 | — |
| 800 | 1000 | +140 | 0 | + 90 | 0 | — |
| 1000 | 1250 | +165 | 0 | +105 | 0 | — |
| 1250 | 1600 | +195 | 0 | +125 | 0 | — |

Notes: (1) Applicable to all radial planes of tapered bore.
(2) Not applicable to bearings of diameter series 7 and 8.

**Table 5.7.2 1/30 Tapered Bore (Class 0)** Unit: μm

| Nominal bearing bore dimension d (mm) | | Mean bore diameter deviation at theoretical small end of a tapered bore | | | | Bore diameter variation in a single radial plane |
|---|---|---|---|---|---|---|
| | | $\Delta d_{mp}$ | | $\Delta d_{1mp}-\Delta d_{mp}$ | | $V_{dp}$ (1) (2) |
| Over | Incl. | High | Low | High | Low | Max |
| 50 | 80 | +15 | 0 | +30 | 0 | 19 |
| 80 | 120 | +20 | 0 | +35 | 0 | 22 |
| 120 | 180 | +25 | 0 | +40 | 0 | 40 |
| 180 | 250 | +30 | 0 | +46 | 0 | 46 |
| 250 | 315 | +35 | 0 | +52 | 0 | 52 |
| 315 | 400 | +40 | 0 | +57 | 0 | 57 |
| 400 | 500 | +45 | 0 | +63 | 0 | 63 |
| 500 | 630 | +50 | 0 | +70 | 0 | 70 |

Notes: (1) Applicable to all radial planes of tapered bores.
(2) Not applicable to bearings of diameter series 7 and 8.





# 6. Internal Clearance of Rolling Contact Bearings

Bearing internal clearance refers to the distances between the bearing rings and rolling elements as shown in Fig. 6.1 and Fig. 6.2. The amount of alternating radial movement of the free bearing rings is defined as radial clearance, and the amount of alternating axial movement of the free bearing rings is defined as axial clearance.

The term internal clearance refers to a state where no force is applied to the bearing rings and rolling elements, i.e., an unloaded state.

Since a stabilizing, measuring load is applied to bearings when measuring the internal clearance, some elastic deformation occurs to the bearing rings and rolling elements, and the measured internal clearance will be larger than the real clearance by the value of deformation. The amount of elastic deformation caused by the measuring load may be disregarded for roller bearings, but must be compensated for when measuring ball bearing clearance because it will skew the internal clearance measurement.

Internal clearance values are described in the JIS (ISO) and the Japan Bearing Industrial Association Standards (BAS) as follows:

Deep-groove ball bearings
Self-aligning ball bearings
Cylindrical roller bearings
Spherical roller bearings
} JIS B1520 (ISO 5753)

For electric motor
Deep-groove ball bearings
Cylindrical roller bearings
} BAS 1003

Bearings not covered by either JIS (ISO) or BAS are standardized by NACHI. Tables 6.1 through 6.6 show internal clearance values for NACHI bearings.

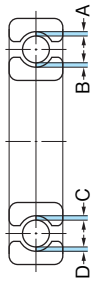


**Fig 6.1 Radial internal clearance = A+B+C+D**

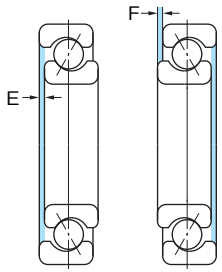


**Fig 6.2 Axial internal clearance =E+F**

**Table 6.1 Radial Internal Clearance of Deep Groove Ball Bearings (JIS)** Unit: μm

| Nominal bearing bore diameter d (mm) | | Radial Clearance | | | | | | | | | |
|---|---|---|---|---|---|---|---|---|---|---|---|
| | | C2 | | CN (normal) | | C3 | | C4 | | C5 | |
| Over | Incl. | Min | Max | Min | Max | Min | Max | Min | Max | Min | Max |
| 2.5 | 6 | 0 | 7 | 2 | 13 | 8 | 23 | — | — | — | — |
| 6 | 10 | 0 | 7 | 2 | 13 | 8 | 23 | 14 | 29 | 20 | 37 |
| 10 | 18 | 0 | 9 | 3 | 18 | 11 | 25 | 18 | 33 | 25 | 45 |
| 18 | 24 | 0 | 10 | 5 | 20 | 13 | 28 | 20 | 36 | 28 | 48 |
| 24 | 30 | 1 | 11 | 5 | 20 | 13 | 28 | 23 | 41 | 30 | 53 |
| 30 | 40 | 1 | 11 | 6 | 20 | 15 | 33 | 28 | 46 | 40 | 64 |
| 40 | 50 | 1 | 11 | 6 | 23 | 18 | 36 | 30 | 51 | 45 | 73 |
| 50 | 65 | 1 | 15 | 8 | 28 | 23 | 43 | 38 | 61 | 55 | 90 |
| 65 | 80 | 1 | 15 | 10 | 30 | 25 | 51 | 46 | 71 | 65 | 105 |
| 80 | 100 | 1 | 18 | 12 | 36 | 30 | 58 | 53 | 84 | 75 | 120 |
| 100 | 120 | 2 | 20 | 15 | 41 | 36 | 66 | 61 | 97 | 90 | 140 |
| 120 | 140 | 2 | 23 | 18 | 48 | 41 | 81 | 71 | 114 | 105 | 160 |
| 140 | 160 | 2 | 23 | 18 | 53 | 46 | 91 | 81 | 130 | 120 | 180 |
| 160 | 180 | 2 | 25 | 20 | 61 | 53 | 102 | 91 | 147 | 135 | 200 |
| 180 | 200 | 2 | 30 | 25 | 71 | 63 | 117 | 107 | 163 | 150 | 230 |
| 200 | 225 | 2 | 35 | 25 | 85 | 75 | 140 | 125 | 195 | 175 | 265 |
| 225 | 250 | 2 | 40 | 30 | 95 | 85 | 160 | 145 | 225 | 205 | 300 |
| 250 | 280 | 2 | 45 | 35 | 105 | 90 | 170 | 155 | 245 | 225 | 340 |
| 280 | 315 | 2 | 55 | 40 | 115 | 100 | 190 | 175 | 270 | 245 | 370 |
| 315 | 355 | 3 | 60 | 45 | 125 | 110 | 210 | 195 | 300 | 275 | 410 |
| 355 | 400 | 3 | 70 | 55 | 145 | 130 | 240 | 225 | 340 | 315 | 460 |
| 400 | 450 | 3 | 80 | 60 | 170 | 150 | 270 | 250 | 380 | 350 | 510 |
| 450 | 500 | 3 | 90 | 70 | 190 | 170 | 300 | 280 | 420 | 390 | 570 |
| 500 | 560 | 10 | 100 | 80 | 210 | 190 | 330 | 310 | 470 | 440 | 630 |
| 560 | 630 | 10 | 110 | 90 | 230 | 210 | 360 | 340 | 520 | 490 | 690 |
| 630 | 710 | 20 | 130 | 110 | 260 | 240 | 400 | 380 | 570 | 540 | 760 |
| 710 | 800 | 20 | 140 | 120 | 290 | 270 | 450 | 430 | 630 | 600 | 840 |
| 800 | 900 | 20 | 160 | 140 | 320 | 300 | 500 | 480 | 700 | 670 | 940 |
| 900 | 1000 | 20 | 170 | 150 | 350 | 330 | 550 | 530 | 770 | 740 | 1040 |
| 1000 | 1120 | 20 | 180 | 160 | 380 | 360 | 600 | 580 | 850 | 820 | 1150 |
| 1120 | 1250 | 20 | 190 | 170 | 410 | 390 | 650 | 630 | 920 | 890 | 1260 |

## Table 6.2 Radial Internal Clearance of Self-aligning Ball Bearings (JIS)

Unit: μm

| Nominal bearing bore diameter d (mm) | | Radial clearance (cylindrical bore) | | | | | | | | | | Radial clearance (tapered bore) | | | | | | | | | |
|---|---|---|---|---|---|---|---|---|---|---|---|---|---|---|---|---|---|---|---|---|---|
| | | C2 | | CN (normal) | | C3 | | C4 | | C5 | | C2 | | CN (normal) | | C3 | | C4 | | C5 | |
| Over | Incl. | Min | Max | Min | Max | Min | Max | Min | Max | Min | Max | Min | Max | Min | Max | Min | Max | Min | Max | Min | Max |
| 2.5 | 6 | 1 | 8 | 5 | 15 | 10 | 20 | 15 | 25 | 21 | 33 | — | — | — | — | — | — | — | — | — | — |
| 6 | 10 | 2 | 9 | 6 | 17 | 12 | 25 | 19 | 33 | 27 | 42 | — | — | — | — | — | — | — | — | — | — |
| 10 | 14 | 2 | 10 | 6 | 19 | 13 | 26 | 21 | 35 | 30 | 48 | — | — | — | — | — | — | — | — | — | — |
| 14 | 18 | 3 | 12 | 8 | 21 | 15 | 28 | 23 | 37 | 32 | 50 | — | — | — | — | — | — | — | — | — | — |
| 18 | 24 | 4 | 14 | 10 | 23 | 17 | 30 | 25 | 39 | 34 | 52 | 7 | 17 | 13 | 26 | 20 | 33 | 28 | 42 | 37 | 55 |
| 24 | 30 | 5 | 16 | 11 | 24 | 19 | 35 | 29 | 46 | 40 | 58 | 9 | 20 | 15 | 28 | 23 | 39 | 33 | 50 | 44 | 62 |
| 30 | 40 | 6 | 18 | 13 | 29 | 23 | 40 | 34 | 53 | 46 | 66 | 12 | 24 | 19 | 35 | 29 | 46 | 40 | 59 | 52 | 72 |
| 40 | 50 | 6 | 19 | 14 | 31 | 25 | 44 | 37 | 57 | 50 | 71 | 14 | 27 | 22 | 39 | 33 | 52 | 45 | 65 | 58 | 79 |
| 50 | 65 | 7 | 21 | 16 | 36 | 30 | 50 | 45 | 69 | 62 | 88 | 18 | 32 | 27 | 47 | 41 | 61 | 56 | 80 | 73 | 99 |
| 65 | 80 | 8 | 24 | 18 | 40 | 35 | 60 | 54 | 83 | 76 | 108 | 23 | 39 | 35 | 57 | 50 | 75 | 69 | 98 | 91 | 123 |
| 80 | 100 | 9 | 27 | 22 | 48 | 42 | 70 | 64 | 96 | 89 | 124 | 29 | 47 | 42 | 68 | 62 | 90 | 84 | 116 | 109 | 144 |
| 100 | 120 | 10 | 31 | 25 | 56 | 50 | 83 | 75 | 114 | 105 | 145 | 35 | 56 | 50 | 81 | 75 | 108 | 100 | 139 | 130 | 170 |
| 120 | 140 | 10 | 38 | 30 | 68 | 60 | 100 | 90 | 135 | 125 | 175 | 40 | 68 | 60 | 98 | 90 | 130 | 120 | 165 | 155 | 205 |
| 140 | 160 | 15 | 44 | 35 | 80 | 70 | 120 | 110 | 161 | 150 | 210 | 45 | 74 | 65 | 110 | 100 | 150 | 140 | 191 | 180 | 240 |





## Table 6.3 Radial Internal Clearance of Cylindrical Roller Bearings

### Table 6.3.1 Radial Internal Clearance of Cylindrical Roller Bearings (Cylindrical Bore) (JIS)

Unit: μm

| Nominal bearing bore diameter d (mm) | | Radial clearance | | | | | | | | | |
|---|---|---|---|---|---|---|---|---|---|---|---|
| | | C2 | | CN (normal) | | C3 | | C4 | | C5 | |
| Over | Incl. | Min | Max | Min | Max | Min | Max | Min | Max | Min | Max |
| — | 10 | 0 | 25 | 20 | 45 | 35 | 60 | 50 | 75 | — | — |
| 10 | 24 | 0 | 25 | 20 | 45 | 35 | 60 | 50 | 75 | 65 | 90 |
| 24 | 30 | 0 | 25 | 20 | 45 | 35 | 60 | 50 | 75 | 70 | 95 |
| 30 | 40 | 5 | 30 | 25 | 50 | 45 | 70 | 60 | 85 | 80 | 105 |
| 40 | 50 | 5 | 35 | 30 | 60 | 50 | 80 | 70 | 100 | 95 | 125 |
| 50 | 65 | 10 | 40 | 40 | 70 | 60 | 90 | 80 | 110 | 110 | 140 |
| 65 | 80 | 10 | 45 | 40 | 75 | 65 | 100 | 90 | 125 | 130 | 165 |
| 80 | 100 | 15 | 50 | 50 | 85 | 75 | 110 | 105 | 140 | 155 | 190 |
| 100 | 120 | 15 | 55 | 50 | 90 | 85 | 125 | 125 | 165 | 180 | 220 |
| 120 | 140 | 15 | 60 | 60 | 105 | 100 | 145 | 145 | 190 | 200 | 245 |
| 140 | 160 | 20 | 70 | 70 | 120 | 115 | 165 | 165 | 215 | 225 | 275 |
| 160 | 180 | 25 | 75 | 75 | 125 | 120 | 170 | 170 | 220 | 250 | 300 |
| 180 | 200 | 35 | 90 | 90 | 145 | 140 | 195 | 195 | 250 | 275 | 330 |
| 200 | 225 | 45 | 105 | 105 | 165 | 160 | 220 | 220 | 280 | 305 | 365 |
| 225 | 250 | 45 | 110 | 110 | 175 | 170 | 235 | 235 | 300 | 330 | 395 |
| 250 | 280 | 55 | 125 | 125 | 195 | 190 | 260 | 260 | 330 | 370 | 440 |
| 280 | 315 | 55 | 130 | 130 | 205 | 200 | 275 | 275 | 350 | 410 | 485 |
| 315 | 355 | 65 | 145 | 145 | 225 | 225 | 305 | 305 | 385 | 455 | 535 |
| 355 | 400 | 100 | 190 | 190 | 280 | 280 | 370 | 370 | 460 | 510 | 600 |
| 400 | 450 | 110 | 210 | 210 | 310 | 310 | 410 | 410 | 510 | 565 | 665 |
| 450 | 500 | 110 | 220 | 220 | 330 | 330 | 440 | 440 | 550 | 625 | 735 |

### Table 6.3.2 Non-interchangeable Radial Internal Clearance of Cylindrical Roller Bearings (Tapered Bore) (NACHI)

Unit: μm

| Nominal bearing bore diameter d (mm) | | Radial clearance | | | | | |
|---|---|---|---|---|---|---|---|
| | | C9na | | C1na | | C2na | |
| Over | Incl. | Min | Max | Min | Max | Min | Max |
| 14 | 18 | 5 | 10 | 10 | 20 | 20 | 30 |
| 18 | 24 | 5 | 10 | 10 | 20 | 20 | 30 |
| 24 | 30 | 5 | 10 | 15 | 25 | 25 | 35 |
| 30 | 40 | 5 | 12 | 15 | 25 | 25 | 40 |
| 40 | 50 | 5 | 15 | 17 | 30 | 30 | 45 |
| 50 | 65 | 5 | 15 | 20 | 35 | 35 | 50 |
| 65 | 80 | 10 | 20 | 25 | 40 | 40 | 60 |
| 80 | 100 | 10 | 25 | 35 | 55 | 45 | 70 |
| 100 | 120 | 10 | 25 | 40 | 60 | 50 | 80 |
| 120 | 140 | 15 | 30 | 45 | 70 | 60 | 90 |
| 140 | 160 | 15 | 35 | 50 | 75 | 65 | 100 |
| 160 | 180 | 15 | 35 | 55 | 85 | 75 | 110 |
| 180 | 200 | 20 | 40 | 60 | 90 | 80 | 120 |
| 200 | 225 | 20 | 45 | 60 | 95 | 90 | 135 |
| 225 | 250 | 25 | 50 | 65 | 100 | 100 | 150 |
| 250 | 280 | 25 | 55 | 75 | 110 | 110 | 165 |
| 280 | 315 | 30 | 60 | 80 | 120 | 120 | 180 |
| 315 | 355 | 30 | 65 | 90 | 135 | 135 | 200 |
| 355 | 400 | 35 | 75 | 100 | 150 | 150 | 225 |
| 400 | 450 | 40 | 85 | 110 | 170 | 170 | 255 |
| 450 | 500 | 45 | 95 | 120 | 190 | 190 | 285 |

Remark: Shown for reference because JIS has not standardized non-interchangeable radial clearance for tapered bore bearings.

## Table 6.4 Radial Internal Clearance of Spherical Roller Bearings (JIS)

### Table 6.4.1 Radial Internal Clearance of Spherical Roller Bearings (Cylindrical Bore)

Unit: μm

| Nominal bearing bore diameter d (mm) | | Radial clearance | | | | | | | | | |
|---|---|---|---|---|---|---|---|---|---|---|---|
| | | C2 | | CN (normal) | | C3 | | C4 | | C5 | |
| Over | Incl. | Min | Max | Min | Max | Min | Max | Min | Max | Min | Max |
| 14 | 18 | 10 | 20 | 20 | 35 | 35 | 45 | 45 | 60 | 60 | 75 |
| 18 | 24 | 10 | 20 | 20 | 35 | 35 | 45 | 45 | 60 | 60 | 75 |
| 24 | 30 | 15 | 25 | 25 | 40 | 40 | 55 | 55 | 75 | 75 | 95 |
| 30 | 40 | 15 | 30 | 30 | 45 | 45 | 60 | 60 | 80 | 80 | 100 |
| 40 | 50 | 20 | 35 | 35 | 55 | 55 | 75 | 75 | 100 | 100 | 125 |
| 50 | 65 | 20 | 40 | 40 | 65 | 65 | 90 | 90 | 120 | 120 | 150 |
| 65 | 80 | 30 | 50 | 50 | 80 | 80 | 110 | 110 | 145 | 145 | 180 |
| 80 | 100 | 35 | 60 | 60 | 100 | 100 | 135 | 135 | 180 | 180 | 225 |
| 100 | 120 | 40 | 75 | 75 | 120 | 120 | 160 | 160 | 210 | 210 | 260 |
| 120 | 140 | 50 | 95 | 95 | 145 | 145 | 190 | 190 | 240 | 240 | 300 |
| 140 | 160 | 60 | 110 | 110 | 170 | 170 | 220 | 220 | 280 | 280 | 350 |
| 160 | 180 | 65 | 120 | 120 | 180 | 180 | 240 | 240 | 310 | 310 | 390 |
| 180 | 200 | 70 | 130 | 130 | 200 | 200 | 260 | 260 | 340 | 340 | 430 |
| 200 | 225 | 80 | 140 | 140 | 220 | 220 | 290 | 290 | 380 | 380 | 470 |
| 225 | 250 | 90 | 150 | 150 | 240 | 240 | 320 | 320 | 420 | 420 | 520 |
| 250 | 280 | 100 | 170 | 170 | 260 | 260 | 350 | 350 | 460 | 460 | 570 |
| 280 | 315 | 110 | 190 | 190 | 280 | 280 | 370 | 370 | 500 | 500 | 630 |
| 315 | 355 | 120 | 200 | 200 | 310 | 310 | 410 | 410 | 550 | 550 | 690 |
| 355 | 400 | 130 | 220 | 220 | 340 | 340 | 450 | 450 | 600 | 600 | 750 |
| 400 | 450 | 140 | 240 | 240 | 370 | 370 | 500 | 500 | 660 | 660 | 820 |
| 450 | 500 | 140 | 260 | 260 | 410 | 410 | 550 | 550 | 720 | 720 | 900 |
| 500 | 560 | 150 | 280 | 280 | 440 | 440 | 600 | 600 | 780 | 780 | 1000 |
| 560 | 630 | 170 | 310 | 310 | 480 | 480 | 650 | 650 | 850 | 850 | 1100 |
| 630 | 710 | 190 | 350 | 350 | 530 | 530 | 700 | 700 | 920 | 920 | 1190 |
| 710 | 800 | 210 | 390 | 390 | 580 | 580 | 770 | 770 | 1010 | 1010 | 1300 |
| 800 | 900 | 230 | 430 | 430 | 650 | 650 | 860 | 860 | 1120 | 1120 | 1440 |
| 900 | 1000 | 260 | 480 | 480 | 710 | 710 | 930 | 930 | 1220 | 1220 | 1570 |

### Table 6.4.2 Radial Internal Clearance of Spherical Roller Bearings (Tapered Bore)

Unit: μm

| Nominal bearing bore diameter d (mm) | | Radial clearance | | | | | | | | | |
|---|---|---|---|---|---|---|---|---|---|---|---|
| | | C2 | | CN (normal) | | C3 | | C4 | | C5 | |
| Over | Incl. | Min | Max | Min | Max | Min | Max | Min | Max | Min | Max |
| 18 | 24 | 15 | 25 | 25 | 35 | 35 | 45 | 45 | 60 | 60 | 75 |
| 24 | 30 | 20 | 30 | 30 | 40 | 40 | 55 | 55 | 75 | 75 | 95 |
| 30 | 40 | 25 | 35 | 35 | 50 | 50 | 65 | 65 | 85 | 85 | 105 |
| 40 | 50 | 30 | 45 | 45 | 60 | 60 | 80 | 80 | 100 | 100 | 130 |
| 50 | 65 | 40 | 55 | 55 | 75 | 75 | 95 | 95 | 120 | 120 | 160 |
| 65 | 80 | 50 | 70 | 70 | 95 | 95 | 120 | 120 | 150 | 150 | 200 |
| 80 | 100 | 55 | 80 | 80 | 110 | 110 | 140 | 140 | 180 | 180 | 230 |
| 100 | 120 | 65 | 100 | 100 | 135 | 135 | 170 | 170 | 220 | 220 | 280 |
| 120 | 140 | 80 | 120 | 120 | 160 | 160 | 200 | 200 | 260 | 260 | 330 |
| 140 | 160 | 90 | 130 | 130 | 180 | 180 | 230 | 230 | 300 | 300 | 380 |
| 160 | 180 | 100 | 140 | 140 | 200 | 200 | 260 | 260 | 340 | 340 | 430 |
| 180 | 200 | 110 | 160 | 160 | 220 | 220 | 290 | 290 | 370 | 370 | 470 |
| 200 | 225 | 120 | 180 | 180 | 250 | 250 | 320 | 320 | 410 | 410 | 520 |
| 225 | 250 | 140 | 200 | 200 | 270 | 270 | 350 | 350 | 450 | 450 | 570 |
| 250 | 280 | 150 | 220 | 220 | 300 | 300 | 390 | 390 | 490 | 490 | 620 |
| 280 | 315 | 170 | 240 | 240 | 330 | 330 | 430 | 430 | 540 | 540 | 680 |
| 315 | 355 | 190 | 270 | 270 | 360 | 360 | 470 | 470 | 590 | 590 | 740 |
| 355 | 400 | 210 | 300 | 300 | 400 | 400 | 520 | 520 | 650 | 650 | 820 |
| 400 | 450 | 230 | 330 | 330 | 440 | 440 | 570 | 570 | 720 | 720 | 910 |
| 450 | 500 | 260 | 370 | 370 | 490 | 490 | 630 | 630 | 790 | 790 | 1000 |
| 500 | 560 | 290 | 410 | 410 | 540 | 540 | 680 | 680 | 870 | 870 | 1100 |
| 560 | 630 | 320 | 460 | 460 | 600 | 600 | 760 | 760 | 980 | 980 | 1230 |
| 630 | 710 | 350 | 510 | 510 | 670 | 670 | 850 | 850 | 1090 | 1090 | 1360 |
| 710 | 800 | 390 | 570 | 570 | 750 | 750 | 960 | 960 | 1220 | 1220 | 1500 |
| 800 | 900 | 440 | 640 | 640 | 840 | 840 | 1070 | 1070 | 1370 | 1370 | 1690 |
| 900 | 1000 | 490 | 710 | 710 | 930 | 930 | 1190 | 1190 | 1520 | 1520 | 1860 |





## Table 6.5 Radial Internal Clearance of Double-Row and Duplex Tapered Roller Bearings (Cylindrical Bore) (NACHI)

Unit: μm

| Nominal bearing bore diameter d (mm) | | Radial clearance | | | | | | | | | | | |
|---|---|---|---|---|---|---|---|---|---|---|---|---|---|
| | | C1 | | C2 | | CN (normal) | | C3 | | C4 | | C5 | |
| Over | Incl. | Min | Max | Min | Max | Min | Max | Min | Max | Min | Max | Min | Max |
| 14 | 18 | 2 | 10 | 10 | 20 | 20 | 30 | 35 | 45 | 45 | 55 | 65 | 75 |
| 18 | 24 | 2 | 10 | 10 | 20 | 20 | 30 | 35 | 45 | 45 | 55 | 65 | 75 |
| 24 | 30 | 2 | 10 | 10 | 25 | 25 | 35 | 40 | 50 | 50 | 60 | 70 | 80 |
| 30 | 40 | 2 | 12 | 12 | 25 | 25 | 40 | 45 | 55 | 55 | 70 | 80 | 95 |
| 40 | 50 | 2 | 15 | 15 | 30 | 30 | 45 | 50 | 65 | 65 | 80 | 95 | 110 |
| 50 | 65 | 2 | 15 | 15 | 35 | 35 | 50 | 55 | 75 | 75 | 90 | 110 | 130 |
| 65 | 80 | 5 | 20 | 20 | 40 | 40 | 60 | 70 | 90 | 90 | 110 | 130 | 150 |
| 80 | 100 | 5 | 25 | 25 | 45 | 45 | 70 | 80 | 105 | 105 | 125 | 155 | 180 |
| 100 | 120 | 5 | 25 | 25 | 50 | 50 | 80 | 95 | 120 | 120 | 145 | 180 | 205 |
| 120 | 140 | 10 | 30 | 30 | 60 | 60 | 90 | 105 | 135 | 135 | 160 | 200 | 230 |
| 140 | 160 | 10 | 35 | 35 | 65 | 65 | 100 | 115 | 150 | 150 | 180 | 225 | 260 |
| 160 | 180 | 10 | 35 | 35 | 75 | 75 | 110 | 125 | 165 | 165 | 200 | 250 | 285 |
| 180 | 200 | 10 | 40 | 40 | 80 | 80 | 120 | 140 | 180 | 180 | 220 | 275 | 315 |
| 200 | 225 | 10 | 45 | 45 | 90 | 90 | 135 | 155 | 200 | 200 | 240 | 305 | 350 |
| 225 | 250 | 15 | 50 | 50 | 100 | 100 | 150 | 170 | 215 | 215 | 265 | 330 | 380 |
| 250 | 280 | 15 | 55 | 55 | 110 | 110 | 165 | 185 | 240 | 240 | 295 | 370 | 420 |
| 280 | 315 | 15 | 60 | 60 | 120 | 120 | 180 | 205 | 265 | 265 | 325 | 410 | 470 |
| 315 | 355 | 15 | 65 | 65 | 135 | 135 | 200 | 225 | 295 | 295 | 360 | 455 | 520 |
| 355 | 400 | 20 | 75 | 75 | 150 | 150 | 225 | 255 | 330 | 330 | 405 | 510 | 585 |
| 400 | 450 | 20 | 85 | 85 | 170 | 170 | 255 | 285 | 370 | 370 | 455 | 565 | 650 |
| 450 | 500 | 20 | 95 | 95 | 190 | 190 | 285 | 315 | 410 | 410 | 505 | 625 | 720 |

## Table 6.6 Radial Internal Clearance of Ball Bearings for Electric Motors (BAS)

### Table 6.6.1 Radial Internal Clearance of Deep Groove Ball Bearings

Unit: μm

| Nominal bearing bore diameter d (mm) | | Radial clearance CM | |
|---|---|---|---|
| Over | Incl. | Min | Max |
| 10 (1) | 18 | 4 | 11 |
| 18 | 30 | 5 | 12 |
| 30 | 50 | 9 | 17 |
| 50 | 80 | 12 | 22 |
| 80 | 120 | 18 | 30 |
| 120 | 160 | 24 | 38 |

Note: (1) 10 mm is included in this group.
Remark: Clearance values in this table are for an unloaded measuring state.

### Table 6.6.2 Radial Internal Clearance of Cylindrical Roller Bearings

Unit: μm

| Nominal bearing bore diameter d (mm) | | Radial clearance | | | |
|---|---|---|---|---|---|
| | | Interchangeable CT | | Non-interchangeable CM | |
| Over | Incl. | Min | Max | Min | Max |
| 24 | 40 | 15 | 35 | 15 | 30 |
| 40 | 50 | 20 | 40 | 20 | 35 |
| 50 | 65 | 25 | 45 | 25 | 40 |
| 65 | 80 | 30 | 50 | 30 | 45 |
| 80 | 100 | 35 | 60 | 35 | 55 |
| 100 | 120 | 35 | 65 | 35 | 60 |
| 120 | 140 | 40 | 70 | 40 | 65 |
| 140 | 160 | 50 | 85 | 50 | 80 |
| 160 | 180 | 60 | 95 | 60 | 90 |
| 180 | 200 | 65 | 105 | 65 | 100 |

Remark: "Interchangeability CT" in this table means interchangeability between bearings of the same manufacturer only.

# 7. Materials for Rolling Contact Bearings

A rolling contact bearing consist of one or more rings and rolling elements (which directly support the loads) and, usually, a cage which keeps the rolling elements at equal intervals. Both rolling and sliding movements occur between these parts.

## 7.1 Bearing Ring and Rolling Elements

Because of high, repetitive stress to the rolling contact areas, fatigue phenomenon will occur to the bearing material after a duration of operation. Loading stress ultimately dislodges a surface section and the bearing fails. To delay the advent of material fatigue, bearing ring and rolling element materials should have the following properties:

- High level of hardness
- High rolling contact fatigue resistance
- Good wear resistance
- Dimensional stability
- Good mechanical strength

Standard NACHI material for bearing rings and rolling elements is vacuum-degassed, high-carbon, chrome bearing steel. See Table 7.1. For applications requiring a higher degree of reliability, bearing steel using a vacuum-melting process or electroslag solution (ERS).

The NACHI steel used for standard bearings is SUJ2 (JIS) steel. For large size bearings, SUJ3 or SUJ5 steels are used for hardenability. If impact resistance is required, SNCM series steel may be used (see Table 7.2).

In addition to the above, high-speed steel may be used for bearings for applications requiring tolerance to high temperatures.

Stainless steel may be used for bearings operating in a corrosive atmosphere.

Ceramic materials may be used for special applications.

## 7.2 Cage Material

Materials for cages are required to have the following properties:

- Good wear resistance
- Dimensional stability
- Good mechanical strength

Cold-rolled steel (see Table 7.5) is used for pressed cages. High-tensile-strength brass castings or carbon steel are used for machined cages (see Tables 7.6 and 7.7). Polyamide resins are used depending on the type of bearing and the application.

For selection of cage material, it is important to consider the operating conditions.

Polyamide cages should not be used at temperatures above 120˚C or below -40˚C.

Polyamide cages should not be used in vacuum because they become brittle due to dehydration.

Polyamide cages may be affected by the use of specific lubricants.

Brass cages should not be used at temperatures in excess 300˚C.

Brass cages are not suitable in Ammonia (e.g. in refrigeration) because Ammonia causes season cracking in brass.

**Table 7.1 High Carbon Chrome Bearing Steel**

| Standard | Symbol | Chemical composition (%) | | | | | | |
|---|---|---|---|---|---|---|---|---|
| | | C | Si | Mn | P | S | Cr | Mo |
| JIS | SUJ 2 | 0.95～1.10 | 0.15～0.35 | ≦ 0.50 | ≦ 0.025 | ≦ 0.025 | 1.30～1.60 | ≦ 0.08 |
| | SUJ 3 | 0.95～1.10 | 0.40～0.70 | 0.90～1.15 | ≦ 0.025 | ≦ 0.025 | 0.90～1.20 | ≦ 0.08 |
| | SUJ 4 | 0.95～1.10 | 0.15～0.35 | ≦ 0.50 | ≦ 0.025 | ≦ 0.025 | 1.30～1.60 | 0.10～0.25 |
| | SUJ 5 | 0.95～1.10 | 0.40～0.70 | 0.90～1.15 | ≦ 0.025 | ≦ 0.025 | 0.90～1.20 | 0.10～0.25 |
| SAE | 52100 | 0.98～1.10 | 0.15～0.35 | 0.25～0.45 | ≦ 0.025 | ≦ 0.025 | 1.30～1.60 | ≦ 0.10 |





**Table 7.2 Case Hardening Steel**

| Standard | Symbol | Chemical composition (%) | | | | | | | |
|---|---|---|---|---|---|---|---|---|---|
| | | C | Si | Mn | P | S | Ni | Cr | Mo |
| JIS | SNCM220 | 0.17～0.23 | 0.15～0.35 | 0.60～0.90 | ≦ 0.030 | ≦ 0.030 | 0.40～0.70 | 0.40～0.60 | 0.15～0.25 |
| | SNCM420 | 0.17～0.23 | 0.15～0.35 | 0.40～0.70 | ≦ 0.030 | ≦ 0.030 | 1.60～2.00 | 0.40～0.60 | 0.15～0.30 |
| | SNCM815 | 0.12～0.18 | 0.15～0.35 | 0.30～0.60 | ≦ 0.030 | ≦ 0.030 | 4.00～4.50 | 0.70～1.00 | 0.15～0.30 |
| | SCr420 | 0.18～0.23 | 0.15～0.35 | 0.60～0.90 | ≦ 0.030 | ≦ 0.030 | — | 0.90～1.20 | — |
| SAE | 8620 | 0.18～0.23 | 0.15～0.35 | 0.70～0.90 | ≦ 0.035 | ≦ 0.040 | 0.40～0.70 | 0.40～0.60 | 0.15～0.25 |
| | 4320 | 0.17～0.22 | 0.15～0.35 | 0.45～0.65 | ≦ 0.035 | ≦ 0.040 | 1.65～2.00 | 0.40～0.60 | 0.20～0.30 |

**Table 7.3 High-Speed Steel**

| Standard | Symbol | Chemical composition (%) | | | | | | | | | | | |
|---|---|---|---|---|---|---|---|---|---|---|---|---|---|
| | | C | Si | Mn | P | S | Cr | Mo | V | Ni | Cu | Co | W |
| AISI | M50 | 0.77～0.85 | ≦ 0.25 | ≦ 0.35 | ≦ 0.015 | ≦ 0.015 | 3.75～4.25 | 4.00～4.50 | 0.90～1.10 | ≦ 0.15 | ≦ 0.10 | ≦ 0.25 | ≦ 0.25 |

**Table 7.4 Stainless Steel**

| Standard | Symbol | Chemical composition (%) | | | | | | |
|---|---|---|---|---|---|---|---|---|
| | | C | Si | Mn | P | S | Cr | Mo |
| JIS | SUS440C | 0.95～1.20 | ≦ 1.00 | ≦ 1.00 | ≦ 0.040 | ≦ 0.030 | 16.00～18.00 | ≦ 0.75 |

Remark: Low-chrome steel is also used sometimes.

**Table 7.5 Cold Rolled Steel Strip and Cold Rolled Steel Sheet and Plate for Pressed Cage**

| Standard | Symbol | Chemical composition (%) | | | | |
|---|---|---|---|---|---|---|
| | | C | Si | Mn | P | S |
| BAS | SPB 1 | ≦ 0.10 | ≦ 0.04 | 0.25～0.45 | ≦ 0.030 | ≦ 0.030 |
| | SPB 2 | 0.13～0.20 | ≦ 0.04 | 0.25～0.60 | ≦ 0.030 | ≦ 0.030 |
| JIS | SPCC | ≦ 0.12 | — | ≦ 0.50 | ≦ 0.040 | ≦ 0.045 |

**Table 7.6 High Tensile Strength Brass Casting for Machined Cage**

| Standard | Symbol | Chemical composition (%) | | | | | | | | | |
|---|---|---|---|---|---|---|---|---|---|---|---|
| | | Cu | Zn | Mn | Fe | Al | Sn | Ni | Pb | Si | Others |
| BAS | HBsCR | 55.0～62.0 | 33.0～37.0 | 2.0～4.0 | 0.5～1.5 | 0.1～1.0 | 0.1～1.0 | ≦ 1.0 | 0.1～1.0 | ≦ 0.2 | ≦ 1.0 |
| JIS | CAC301 (HBsC1) | 55.0～60.0 | 33.0～42.0 | 0.1～1.5 | 0.5～1.5 | 0.5～1.5 | ≦ 1.0 | ≦ 1.0 | ≦ 0.4 | ≦ 0.1 | — |
| | CAC302 (HBsC2) | 55.0～60.0 | 30.0～42.0 | 0.1～3.5 | 0.5～2.0 | 0.5～2.0 | ≦ 1.0 | ≦ 1.0 | ≦ 0.4 | ≦ 0.1 | — |

Old symbols are shown in ( ) parentheses

**Table 7.7 Steel for Machined Cages**

| Standard | Symbol | Chemical composition (%) | | | | |
|---|---|---|---|---|---|---|
| | | C | Si | Mn | P | S |
| JIS | S25C | 0.22～0.28 | 0.15～0.35 | 0.30～0.60 | ≦ 0.030 | ≦ 0.035 |

# 8. Application of Rolling Contact Bearings

## 8.1 Fits and Clearance

### 8.1.1 Importance of Fit

To get the best performance from a rolling contact bearing, the fit between the inner ring and shaft, and outer ring and housing must be correct. If the mating surfaces lack interference, the bearing ring may move circumferentially on the shaft or in the housing. This phenomenon is called creep. Once mating surfaces start to creep, the bearing ring will begin to wear excessively and the shaft and/or housing may be damaged. Abrasive debris may enter the bearing, cause abnormal heating or vibration.

Creep is often impossible to prevent by mere fastening of the bearing in an axial direction. To prevent creep, the bearing rings that support the rotating load must be provided with necessary interference. The bearing rings that support stationary load normally do not require interference unless contact corrosion from vibration is a concern.

### 8.1.2 Selection of Fit

To select the most appropriate fit, the following items must be considered:

- direction of load
- characteristics of load
- magnitude of load
- temperature conditions
- mounting, and dismounting conditions

For general recommendations see Table 8.1.

For mounting bearings in a thin-walled housing or on a hollow shaft, larger interference than normal must be provided.

Split-housing applications requiring high precision or tight housing bore fits are not recommended. (A split housing may cause the outer ring to deform).

For application of bearings subjected to vibration, an interference fit should be applied to both inner and outer rings.

Tables 8.2 through 8.14 describe general fit recommendations. For fits not covered by these tables, please contact NACHI.





**Table 8.1 Fit vs. Load Characteristics**

| Ring rotation | Type of load | Load conditions | Fit | |
|---|---|---|---|---|
| | | | Inner ring | Outer ring |
| 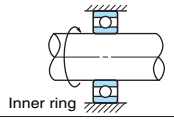 Inner ring | Non-rotating | Rotating inner ring load<br>Stationary outer ring load | Interference fit | Loose fit |
| 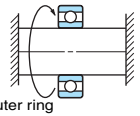 Outer ring | Rotating | | | |
| 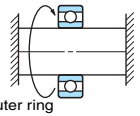 Outer ring | 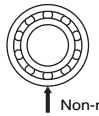 Non-rotating | Rotating outer ring load<br>Stationary inner ring load | Loose fit | Interference fit |
| 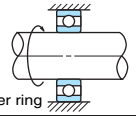 Inner ring | Rotating | | | |
| Load direction not constant | Rotating or stationary | Indeterminate direction load | Interference fit | Interference fit |

### Table 8.2.1 Bearing Bore (1) Fits for Radial Bearings

| Bearing tolerance class | Tolerance class for shaft O.D. | | | | | | | | |
|---|---|---|---|---|---|---|---|---|---|
| | For rotating inner ring load and indeterminate direction load | | | | | | | For rotating outer ring load | |
| Class 0, class 6 | r 6 | p 6 | n 6 | m 5<br>m 6 | k 5<br>k 6 | j 5<br>j 6<br>js 6 | h 5 | h 5<br>h 6 | g 5<br>g 6 |
| Class 5, class 4 | — | — | — | m 5 | k 4 | js 4 | h 4 | h 5 | — |

### Table 8.2.2 Bearing Outside Diameter (1) Fits for Radial Bearings (Except for Magneto Bearings)

| Bearing tolerance class | Tolerance class for housing bore | | | | | | | | | |
|---|---|---|---|---|---|---|---|---|---|---|
| | For rotating inner ring load | | | | For indeterminate direction loads | | | For rotating outer ring load | | |
| Class 0, class 6 | — | J 6<br>J 7 | H 6<br>H 7 | G 7 | M 7 | K 6<br>K 7 | J 6<br>J 7 | P 7 | N 7 | M 7 |
| Class 5, class 4 | K 5 | Js 5 | H 5 | — | — | — | — | — | — | M 5 |

### Table 8.3.1 Bearing Bore or Center Washer Bore (1) Fits for Thrust Bearings

| Bearing tolerance class | Tolerance class for shaft O.D. | | | | |
|---|---|---|---|---|---|
| | Axial load only | For composite load (spherical roller thrust bearings) | | | |
| Class 0 | j 6<br>js 6 | n 6 | m 6 | k 6 | j 6<br>js 6 |

### Table 8.3.2 Bearing Outside Diameter (1) Fits for Thrust Bearings

| Bearing tolerance class | Tolerance class for housing bore | |
|---|---|---|
| | Axial load only | For composite load (spherical roller thrust bearings) |
| Class 0 | — | M 7 H 7 |

Note: (1) These dimensional deviations are based on JIS B 1514.





### Table 8.4 Shaft Tolerances (1) for Radial Bearings

| Operating conditions | | Shaft dia. (mm) | | | Tolerance class for shaft O.D. | Remarks | Examples of application (reference) |
|---|---|---|---|---|---|---|---|
| | | Ball Bearings | Cylindrical Roller Bearings Tapered Roller Bearings | Spherical Roller Bearings | | | |
| ●Bearings with cylindrical bore | | | | | | | |
| Rotating outer ring load | When the inner ring is required to move on the shaft easily | For all shaft diameters | | | g6 | When high precision is required, adopt g5 and h5. For large bearings, f6 is also adopted for easy movement. | Wheel on non-rotating shaft |
| | When the inner ring is not required to move on the shaft easily | For all shaft diameters | | | h6 | | Tension pulley, rope sheave |
| Rotating inner ring load or indeterminate direction load | Light load or fluctuating load | ≦ 18 | — | — | h5 | When high precision is required, adopt j5, k5 and m5 instead of j6, k6 and m6 respectively. | Electrical appliance, Machine tools, pump, blower, hand truck, freight carrier |
| | | 18 to 100 | ≦ 40 | — | j6 | | |
| | | 100 to 200 | 40 to 140 | — | k6 | | |
| | | — | 140 to 200 | — | m6 | | |
| | Normal load or heavy load | ≦ 18 | — | — | j5 | The tolerances of k6 and m6 instead of k5 and m5 can be used for single row tapered roller bearings and single row angular contact bal bearings because the internal clearance fluctuation due to fit need not be considered. | General bearing application, electric motor, turbine, pump, internal combustion engine, wood working machine |
| | | 18 to 100 | ≦ 40 | ≦ 40 | k5 | | |
| | | 100 to 200 | 40 to 100 | 40 to 65 | m5 | | |
| | | — | 100 to 140 | 65 to 100 | m6 | | |
| | | — | 140 to 200 | 100 to 140 | n6 | | |
| | | — | 200 to 400 | 140 to 280 | p6 | | |
| | | — | — | Over 280 | r6 | | |
| | Heavy or shock load | — | 50 to 140 | 50 to 100 | n6 | A bearing with an internal clearance larger than CN (normal) clearance is needed. | Axles of locomotive and passenger train, traction motor |
| | | — | 140 to 200 | 100 to 140 | p6 | | |
| | | — | Over 200 | Over 140 | r6 | | |
| Centric axial load | | ≦ 250 | | | j6 | — | — |
| | | Over 250 | | | js6, j6 | | |
| ●Bearing with tapered bore (with sleeve) | | | | | | | |
| For all load conditions | | For all shaft diameters | | | h9/IT5 | h10/IT7 can also be used for drive shafts.<br>IT5 and IT7 indicate the shaft form error (roundness, cylindricity) should be limited within the tolerance ranges of IT5 and IT7. | General bearing application, railroad car axles |

Note: (1) Shaft tolerances in this table are applied to solid steel shafts.
Remark: Heavy load equals P>0.12Cr, normal load equals 0.12Cr≧P>0.06Cr, light load equals P≦0.06Cr.

### Table 8.5 Shaft Tolerances for Thrust Bearings

| Operating conditions | | Shaft dia. (mm) | Tolerance class for shaft O.D. |
|---|---|---|---|
| Axial load only<br>(Thrust ball bearings and spherical roller thrust bearings) | | ≦ 250 | j6 |
| | | Over 250 | js6, j6 |
| Composite load<br>(Spherical Roller Thrust Bearings) | Rotating outer ring load | ≦ 250 | j6 |
| | | Over 250 | js6, j6 |
| | Rotating inner ring load or indeterminate direction load | ≦ 200 | k6 |
| | | 200 to 400 | m6 |
| | | Over 400 | n5 |

**Table 8.6 Housing Tolerances (1) for Radial Bearings (Except Inch-Series Tapered Roller Bearings)**

| Operating conditions | | | Tolerance class for housing bore | Outer ring movement (2) | Examples of application (reference) |
|---|---|---|---|---|---|
| Monoblock housing | Rotating outer ring load | When a heavy load is applied to a thin-walled housing or impact load | P7 | Outer ring cannot move | Automotive wheel (roller bearing) |
| | | Normal load or heavy load | N7 | | Automotive wheel (ball bearing) |
| | | Light load or fluctuating load | M7 | | Conveyor roller, pulley, tension pulley |
| | Indeterminate direction load | Heavy impact load | | | Traction motor |
| | | Heavy load or normal load: When the outer ring is not required to move in an axial direction | K7 | Outer ring cannot move as principle | Electric motor, pump, crank shaft main bearing |
| Monoblock or split housing | | Normal load or light load: When it is desirable that the outer ring can be moved in an axial direction | J7 | Outer ring can move | Electric motor, pump, crank shaft main bearing |
| | Rotating inner ring load | Impact load: When no-load condition occurs temporarily | | | Railroad car axle |
| | | All kinds of loads | H7 | Outer ring can move easily | General bearing application, railroad car axle bearing |
| | | Normal load or light load | H8 | | Gear transmission |
| | | When there is thermal conduction through the shaft | G7 | | Paper mill (drying cylinder) |
| Monoblock housing | When extremely high accuracy is required | Fluctuating load: When extremely accurate rotation and high rigidity are required | N6 | Outer ring cannot move | Roller bearing (outside diameter is over 125 mm) for spindle of machine tool |
| | | | M6 | | Roller bearing (outside diameter is under and including 125 mm) for spindle of machine tool |
| | | Indeterminate direction light load: When extremely accurate rotation is required. | K6 | Outer ring cannot move as principle | Spindle of grinding machine, ball bearing on grinding wheel side. High speed centrifugal compressor, fixed side bearing |
| | | When extremely accurate rotation is required: When it is desirable that outer ring can be moved in axial direction. | J6 | Outer ring can move | Spindle of grinding machine, ball bearing on drive side. High speed centrifugal compressor, free side bearing. |

Notes: (1) This table applies to cast iron or steel housings. For light alloy housings, a tighter fit is used rather than those that meet with the tolerances in this table.
(2) Indicates whether the outer ring can or cannot move in axial direction for non-separable bearings.





**Table 8.7 Housing Tolerances for Thrust Bearings**

| Operating conditions | | Tolerance class for housing bore | Remarks |
|---|---|---|---|
| Axial load only (All thrust bearings) | Thrust Ball Bearings | H8 | When high accuracy is not required, outer ring or aligning seat is mounted to provide clearance in radial direction. |
| | Spherical roller thrust bearings: When radial load is borne by another bearing. | — | Outer ring radial clearance is approximately 0.001D. |
| Composite load (Spherical Roller Thrust Bearings) | Stationary outer ring load or indeterminate direction load | H7<br>J7 | — |
| | Rotating outer ring load | K7<br>M7 | Bearing application in general<br>When the radial load is comparatively large |

## Table 8.8 Fits of Inch Series Tapered Roller Bearings with Shafts

### Table 8.8.1 For Bearings with ABMA Class 4

Unit: μm

| Operating conditions | | | Nominal bearing bore diameter d (mm) | | Bearing bore deviation | | Shaft diameter deviation | | Fit value (1) | |
|---|---|---|---|---|---|---|---|---|---|---|
| | | | Over | Incl. | High | Low | High | Low | Max | Min |
| Rotating inner ring load | Normal load No impact | | – | 76.2 | +13 | 0 | + 38 | + 26 | 38T | 12T |
| | | | 76.2 | 304.8 | +25 | 0 | + 64 | + 38 | 64T | 13T |
| | | | 304.8 | 609.6 | +51 | 0 | +127 | + 76 | 127T | 25T |
| | | | 609.6 | 914.4 | +76 | 0 | +191 | +114 | 191T | 38T |
| | Heavy load High speed rotation Impact load | | – | 76.2 | +13 | 0 | + 64 | + 38 | 64T | 25T |
| | | | 76.2 | 304.8 | +25 | 0 | | (2) | | |
| | | | 304.8 | 609.6 | +51 | 0 | | | | |
| | | | 609.6 | 914.4 | +76 | 0 | +381 | +305 | 381T | 229T |
| Rotating outer ring load | Normal load no impact | For non-grinding shaft (when ring is not needed to move on shaft) | – | 76.2 | +13 | 0 | + 13 | 0 | 13T | 13L |
| | | | 76.2 | 304.8 | +25 | 0 | + 25 | 0 | 25T | 25L |
| | | | 304.8 | 609.6 | +51 | 0 | + 51 | 0 | 51T | 51L |
| | | | 609.6 | 914.4 | +76 | 0 | + 76 | 0 | 76T | 76L |
| | Normal load no impact | Grinding machine shaft (when ring is needed to move on shaft) | – | 76.2 | +13 | 0 | 0 | –13 | 0 | 26L |
| | | | 76.2 | 304.8 | +25 | 0 | 0 | –25 | 0 | 51L |
| | | | 304.8 | 609.6 | +51 | 0 | 0 | –51 | 0 | 102L |
| | | | 609.6 | 914.4 | +76 | 0 | 0 | –76 | 0 | 152L |

Notes (1) T: Tight fit, L: Loose fit.
(2) Mean amounts of tight fits are d/2000 mm.

### Table 8.8.2 For Bearings with ABMA Class 3 and Class 0

Unit: μm

| Operating conditions | | Nominal bearing bore diameter d (mm) | | Bearing bore deviation | | Shaft diameter deviation | | Fit value (1) | |
|---|---|---|---|---|---|---|---|---|---|
| | | Over | Incl. | High | Low | High | Low | Max | Min |
| Rotating inner ring load | Main shaft of precision machine tool | – | 304.8 | +13 | 0 | + 38 | +18 | 31T | 5T |
| | | 304.8 | 609.6 | +25 | 0 | + 64 | +38 | 64T | 13T |
| | | 609.6 | 914.4 | +38 | 0 | +102 | +63 | 102T | 25T |
| | Heavy load High speed rotation Impact load | – | 76.2 | +13 | 0 | | | | |
| | | 76.2 | 304.8 | +13 | 0 | | (2) | | |
| | | 304.8 | 609.6 | +25 | 0 | | | | |
| | | 609.6 | 914.4 | +38 | 0 | | | | |
| Rotating outer ring load | Main shaft of precision machine tool | – | 304.8 | +13 | 0 | + 13 | +18 | 31T | 5T |
| | | 304.8 | 609.6 | +25 | 0 | + 64 | +38 | 64T | 13T |
| | | 609.6 | 914.4 | +38 | 0 | +102 | +63 | 102T | 25T |

Notes: (1) T: Tight fit
(2) Mean amounts of tight fits are d/4000 mm.
(3) Bearing bore d of less than 241.3 mm are applied for class 0.





## Table 8.9 Fits of Inch Series Tapered Roller Bearings with Housings

### Table 8.9.1 For Bearings with ABMA Class 4

Unit: μm

| Operating conditions | | Nominal bearing outside diameter D (mm) | | Bearing outside diameter deviation | | Housing bore diameter deviation | | Fit value (1) | |
|---|---|---|---|---|---|---|---|---|---|
| | | Over | Incl. | High | Low | High | Low | Max | Min |
| Rotating inner ring load | Floating side or clamping side | – | 76.2 | +25 | 0 | + 76 | + 50 | 25L | 76L |
| | | 76.2 | 127.0 | +25 | 0 | + 76 | + 50 | 25L | 76L |
| | | 127.0 | 304.8 | +25 | 0 | + 76 | + 50 | 25L | 76L |
| | | 304.8 | 609.6 | +51 | 0 | +152 | +102 | 51L | 152L |
| | | 609.6 | 914.4 | +76 | 0 | +229 | +152 | 76L | 229L |
| | Outer ring location in axial direction can be adjusted | – | 76.2 | +25 | 0 | + 25 | 0 | 25T | 25L |
| | | 76.2 | 127.0 | +25 | 0 | + 25 | 0 | 25T | 25L |
| | | 127.0 | 304.8 | +25 | 0 | + 51 | 0 | 25T | 51L |
| | | 304.8 | 609.6 | +51 | 0 | + 76 | + 26 | 25T | 76L |
| | | 609.6 | 914.4 | +76 | 0 | +127 | + 51 | 25T | 127L |
| | Outer ring location in axial direction cannot be adjusted | – | 76.2 | +25 | 0 | –13 | –39 | 64T | 13T |
| | | 76.2 | 127.0 | +25 | 0 | –25 | –51 | 76T | 25T |
| | | 127.0 | 304.8 | +25 | 0 | –25 | –51 | 76T | 25T |
| | | 304.8 | 609.6 | +51 | 0 | –25 | –76 | 127T | 25T |
| | | 609.6 | 914.4 | +76 | 0 | –25 | –102 | 178T | 25T |
| Rotating outer ring load | Outer ring location in axial direction cannot be adjusted | – | 76.2 | +25 | 0 | –13 | –39 | 64T | 13T |
| | | 76.2 | 127.0 | +25 | 0 | –25 | –51 | 76T | 25T |
| | | 127.0 | 304.8 | +25 | 0 | –25 | –51 | 76T | 25T |
| | | 304.8 | 609.6 | +51 | 0 | –25 | –76 | 127T | 25T |
| | | 609.6 | 914.4 | +76 | 0 | –25 | –102 | 178T | 25T |

Notes (1) L: Loose fit, T: Tight fit.

### Table 8.9.2 For Bearings with ABMA Class 3 and Class 0

Unit: μm

| Operating conditions | | Nominal bearing outside diameter D (mm) | | Bearing outside diameter deviation | | Housing bore diameter deviation | | Fit value (1) | |
|---|---|---|---|---|---|---|---|---|---|
| | | Over | Incl. | High | Low | High | Low | Max | Min |
| Rotating inner ring load | Floating side | – | 152.4 | +13 | 0 | +38 | +26 | 13L | 38L |
| | | 152.4 | 304.8 | +13 | 0 | +38 | +26 | 13L | 38L |
| | | 304.8 | 609.6 | +25 | 0 | +64 | +38 | 13L | 64L |
| | | 609.6 | 914.4 | +38 | 0 | +89 | +51 | 13L | 89L |
| | Clamping side | – | 152.4 | +13 | 0 | +25 | +13 | 0 | 25L |
| | | 152.4 | 304.8 | +13 | 0 | +25 | +13 | 0 | 25L |
| | | 304.8 | 609.6 | +25 | 0 | +51 | +25 | 0 | 51L |
| | | 609.6 | 914.4 | +38 | 0 | +76 | +38 | 0 | 76L |
| | Outer ring location in axial direction can be adjusted | – | 152.4 | +13 | 0 | +13 | 0 | 13T | 13L |
| | | 152.4 | 304.8 | +13 | 0 | +25 | 0 | 13T | 25L |
| | | 304.8 | 609.6 | +25 | 0 | +25 | 0 | 25T | 25L |
| | | 609.6 | 914.4 | +38 | 0 | +38 | 0 | 38T | 38L |
| | Outer ring location in axial direction cannot be adjusted | – | 152.4 | +13 | 0 | 0 | –12 | 25T | 0 |
| | | 152.4 | 304.8 | +13 | 0 | 0 | –25 | 38T | 0 |
| | | 304.8 | 609.6 | +25 | 0 | 0 | –26 | 51T | 0 |
| | | 609.6 | 914.4 | +38 | 0 | 0 | –38 | 76T | 0 |
| Rotating outer ring load | Normal load Outer ring location in axial direction cannot be adjusted | – | 152.4 | +13 | 0 | –13 | –25 | 38T | 13T |
| | | 152.4 | 304.8 | +13 | 0 | –13 | –38 | 51T | 13T |
| | | 304.8 | 609.6 | +25 | 0 | –13 | –39 | 64T | 13T |
| | | 609.6 | 914.4 | +38 | 0 | –13 | –51 | 89T | 13T |

Notes: (1) L: Loose fit, T: Tight fit.
(2) Bearing outer diameter D of less than 304.8 mm are applied for class 0.

NACHI

## Table 8.10 Amounts of Fits: Radial Bearings with Tolerance JIS Class 0 (ISO Normal Class)

### Table 8.10.1 Inner Ring with Shaft

Unit: μm

| Nominal dimensions (mm) | | Deviation of single plane mean bore dia. of bearing (1) | | Shaft with tolerance grade IT5 | | | | | | | | | | Shaft with tolerance grade IT6 | | | | | | | | | | | | | | | |
|---|---|---|---|---|---|---|---|---|---|---|---|---|---|---|---|---|---|---|---|---|---|---|---|---|---|---|---|---|---|
| | | | | m5 | | h5 | | j5 | | h5 | | g5 | | r6 | | p6 | | n6 | | m6 | | k6 | | j6 | | h6 | | g6 | |
| | | | | Tight | | Tight | | Tight | Loose | Tight | Loose | Tight | Loose | Tight | | Tight | | Tight | | Tight | | Tight | | Tight | Loose | Tight | Loose | Tight | Loose |
| Over | Incl. | High | Low | Max | Min | Max | Min | Max | Max | Max | Max | Max | Max | Max | Min | Max | Min | Max | Min | Max | Min | Max | Min | Max | Max | Max | Max | Max | Max |
| 3 | 6 | 0 | –8 | — | — | — | — | 11 | 2 | 8 | 5 | 4 | 9 | — | — | — | — | — | — | — | — | — | — | 14 | 2 | 8 | 8 | 4 | 12 |
| 6 | 10 | 0 | –8 | — | — | — | — | 12 | 2 | 8 | 6 | 3 | 11 | — | — | — | — | — | — | — | — | — | — | 15 | 2 | 8 | 9 | 3 | 14 |
| 10 | 18 | 0 | –8 | — | — | 17 | 1 | 13 | 3 | 8 | 8 | 2 | 14 | — | — | — | — | — | — | — | — | 20 | 1 | 16 | 3 | 8 | 11 | 2 | 17 |
| 18 | 30 | 0 | –10 | — | — | 21 | 2 | 15 | 4 | 10 | 9 | 3 | 16 | — | — | — | — | — | — | — | — | 25 | 2 | 19 | 4 | 10 | 13 | 3 | 20 |
| 30 | 50 | 0 | –12 | 32 | 9 | 25 | 2 | 18 | 5 | 12 | 11 | 3 | 20 | — | — | — | — | 45 | 17 | 37 | 9 | 30 | 2 | 23 | 5 | 12 | 16 | 3 | 25 |
| 50 | 80 | 0 | –15 | 39 | 11 | 30 | 2 | 21 | 7 | 15 | 13 | 5 | 23 | — | — | — | — | 54 | 20 | 45 | 11 | 36 | 2 | 27 | 7 | 15 | 19 | 5 | 29 |
| 80 | 120 | 0 | –20 | 48 | 13 | 38 | 3 | 26 | 9 | 20 | 15 | 8 | 27 | — | — | 76 | 37 | 65 | 23 | 55 | 13 | 45 | 3 | 33 | 9 | 20 | 22 | 8 | 34 |
| 120 | 140 | | | | | | | | | | | | | 113 | 63 | | | | | | | | | | | | | | |
| 140 | 160 | 0 | –25 | 58 | 15 | 46 | 3 | — | — | 25 | 18 | 11 | 32 | 115 | 65 | 93 | 43 | 77 | 27 | 65 | 15 | 53 | 3 | 39 | 11 | 25 | 25 | 11 | 39 |
| 160 | 180 | | | | | | | | | | | | | 118 | 68 | | | | | | | | | | | | | | |
| 180 | 200 | | | | | | | | | | | | | 136 | 77 | | | | | | | | | | | | | | |
| 200 | 225 | 0 | –30 | 67 | 17 | 54 | 4 | — | — | 30 | 20 | 13 | 35 | 139 | 80 | 109 | 50 | 90 | 31 | 76 | 17 | 63 | 4 | 46 | 13 | 30 | 29 | 15 | 44 |
| 225 | 250 | | | | | | | | | | | | | 143 | 84 | | | | | | | | | | | | | | |
| 250 | 280 | 0 | –35 | — | — | — | — | — | — | 35 | 23 | 18 | 40 | 161 | 94 | 123 | 56 | — | — | — | — | — | — | 51 | 16 | 35 | 32 | 18 | 49 |
| 280 | 315 | | | | | | | | | | | | | 165 | 98 | | | | | | | | | | | | | | |
| 315 | 355 | 0 | –40 | — | — | — | — | — | — | 40 | 25 | 22 | 43 | 184 | 108 | 138 | 62 | — | — | — | — | — | — | 58 | 18 | 40 | 36 | 22 | 54 |
| 355 | 400 | | | | | | | | | | | | | 190 | 114 | | | | | | | | | | | | | | |
| 400 | 450 | 0 | –45 | — | — | — | — | — | — | 45 | 27 | 25 | 47 | 211 | 126 | — | — | — | — | — | — | — | — | 65 | 20 | 45 | 40 | 26 | 60 |
| 450 | 500 | | | | | | | | | | | | | 217 | 132 | | | | | | | | | | | | | | |

Note: (1) Δdmp specified in JIS B 1514.

### Table 8.10.2 Outer Ring with Housing

Unit: μm

| Nominal dimensions (mm) | | Deviation of single plane mean outer dia. of bearing (1) | | Housing with tolerance grade IT6 | | | | | | Housing with tolerance grade IT7 | | | | | | | | | | | | | |
|---|---|---|---|---|---|---|---|---|---|---|---|---|---|---|---|---|---|---|---|---|---|---|---|
| | | | | K6 | | J6 | | H6 | | P7 | | N7 | | M7 | | K7 | | J7 | | H7 | | G7 | |
| | | | | Tight | Loose | Tight | Loose | Tight | Loose | Tight | | Tight | Loose | Tight | Loose | Tight | Loose | Tight | Loose | Tight | Loose | Loose | |
| Over | Incl. | High | Low | Max | Max | Max | Max | Max | Max | Max | Min | Max | Max | Max | Max | Max | Max | Max | Max | Max | Max | Min | Max |
| 6 | 10 | 0 | –8 | 7 | 10 | 4 | 13 | 0 | 17 | 24 | 1 | 19 | 4 | 15 | 8 | 10 | 13 | 7 | 16 | 0 | 23 | 5 | 28 |
| 10 | 18 | 0 | –8 | 9 | 10 | 5 | 14 | 0 | 19 | 29 | 3 | 23 | 3 | 18 | 8 | 12 | 14 | 8 | 18 | 0 | 26 | 6 | 32 |
| 18 | 30 | 0 | –8 | 11 | 11 | 5 | 17 | 0 | 22 | 35 | 5 | 28 | 2 | 21 | 9 | 15 | 15 | 9 | 21 | 0 | 30 | 7 | 37 |
| 30 | 50 | 0 | –11 | 13 | 14 | 6 | 21 | 0 | 27 | 42 | 6 | 33 | 3 | 25 | 11 | 18 | 18 | 11 | 25 | 0 | 36 | 9 | 45 |
| 50 | 80 | 0 | –13 | 15 | 17 | 6 | 26 | 0 | 32 | 51 | 8 | 39 | 4 | 30 | 13 | 21 | 22 | 12 | 31 | 0 | 43 | 10 | 53 |
| 80 | 120 | 0 | –15 | 18 | 19 | 6 | 31 | 0 | 37 | 59 | 9 | 45 | 5 | 35 | 15 | 25 | 25 | 13 | 37 | 0 | 50 | 12 | 62 |
| 120 | 150 | 0 | –18 | 21 | 22 | 7 | 36 | 0 | 43 | 68 | 10 | 52 | 6 | 40 | 18 | 28 | 30 | 14 | 44 | 0 | 58 | 14 | 72 |
| 150 | 180 | 0 | –25 | 21 | 29 | 7 | 43 | 0 | 50 | 68 | 3 | 60 | 13 | 40 | 25 | 28 | 37 | 14 | 51 | 0 | 65 | 14 | 79 |
| 180 | 250 | 0 | –30 | 24 | 35 | 7 | 52 | 0 | 59 | 79 | 3 | 60 | 16 | 46 | 30 | 33 | 43 | 16 | 60 | 0 | 76 | 15 | 91 |
| 250 | 315 | 0 | –35 | 27 | 40 | 7 | 60 | 0 | 67 | 88 | 1 | 66 | 21 | 52 | 35 | 36 | 51 | 16 | 71 | 0 | 87 | 17 | 104 |
| 315 | 400 | 0 | –40 | 29 | 47 | 7 | 69 | 0 | 76 | 98 | 1 | 73 | 24 | 57 | 40 | 40 | 57 | 18 | 79 | 0 | 97 | 18 | 115 |
| 400 | 500 | 0 | –45 | 32 | 53 | 7 | 78 | 0 | 85 | 108 | 0 | 80 | 28 | 63 | 45 | 45 | 63 | 20 | 88 | 0 | 108 | 20 | 128 |

Note: (1) ΔDmp specified in JIS B 1514.

NACHI

## Table 8.11 Amounts of Fits: Radial Bearings with Tolerance JIS (ISO) Class 6

### Table 8.11.1 Inner Ring with Shaft

Unit: μm

| Nominal dimensions (mm) | | Deviation of single plane mean bore dia. of bearing (1) | | Shaft with tolerance grade IT5 | | | | | | | | | | Shaft with tolerance grade IT6 | | | | | | | | | | | | | | | |
|---|---|---|---|---|---|---|---|---|---|---|---|---|---|---|---|---|---|---|---|---|---|---|---|---|---|---|---|---|---|
| | | | | m5 | | h5 | | j5 | | h5 | | g5 | | r6 | | p6 | | n6 | | m6 | | k6 | | j6 | | h6 | | g6 | |
| | | | | Tight | | Tight | | Tight | Loose | Tight | Loose | Tight | Loose | Tight | | Tight | | Tight | | Tight | | Tight | | Tight | Loose | Tight | Loose | Tight | Loose |
| Over | Incl. | High | Low | Max | Min | Max | Min | Max | Max | Max | Max | Max | Max | Max | Min | Max | Min | Max | Min | Max | Min | Max | Min | Max | Max | Max | Max | Max | Max |
| 3 | 6 | 0 | –7 | — | — | — | — | 10 | 2 | 7 | 5 | 3 | 9 | — | — | — | — | — | — | — | — | — | — | 13 | 2 | 7 | 8 | 3 | 12 |
| 6 | 10 | 0 | –7 | — | — | — | — | 11 | 2 | 7 | 6 | 2 | 11 | — | — | — | — | — | — | — | — | — | — | 14 | 2 | 7 | 9 | 2 | 14 |
| 10 | 18 | 0 | –7 | — | — | 16 | 1 | 12 | 3 | 7 | 8 | 1 | 14 | — | — | — | — | — | — | — | — | 19 | 1 | 15 | 3 | 7 | 11 | 1 | 17 |
| 18 | 30 | 0 | –8 | — | — | 19 | 2 | 13 | 4 | 8 | 9 | 1 | 16 | — | — | — | — | — | — | — | — | 23 | 2 | 17 | 4 | 8 | 13 | 1 | 20 |
| 30 | 50 | 0 | –10 | 30 | 9 | 23 | 2 | 16 | 5 | 10 | 11 | 1 | 20 | — | — | — | — | 43 | 17 | 35 | 9 | 28 | 2 | 21 | 5 | 10 | 16 | 1 | 25 |
| 50 | 80 | 0 | –12 | 36 | 11 | 27 | 2 | 18 | 7 | 12 | 13 | 2 | 23 | — | — | — | — | 51 | 20 | 42 | 11 | 33 | 2 | 24 | 7 | 12 | 19 | 2 | 29 |
| 80 | 120 | 0 | –15 | 43 | 13 | 33 | 3 | 21 | 9 | 15 | 15 | 3 | 27 | — | — | 74 | 37 | 60 | 23 | 50 | 13 | 40 | 3 | 28 | 9 | 15 | 22 | 3 | 34 |
| 120 | 140 | | | | | | | | | | | | | 106 | 63 | | | | | | | | | | | | | | |
| 140 | 160 | 0 | –18 | 51 | 15 | 39 | 3 | — | — | 18 | 18 | 4 | 32 | 108 | 65 | 86 | 43 | 70 | 27 | 58 | 15 | 46 | 3 | 32 | 11 | 18 | 25 | 4 | 39 |
| 160 | 180 | | | | | | | | | | | | | 111 | 68 | | | | | | | | | | | | | | |
| 180 | 200 | | | | | | | | | | | | | 128 | 77 | | | | | | | | | | | | | | |
| 200 | 225 | 0 | –22 | 58 | 17 | 46 | 4 | — | — | 22 | 20 | 7 | 35 | 131 | 80 | 101 | 50 | 82 | 31 | 68 | 17 | 55 | 4 | 38 | 13 | 22 | 29 | 7 | 44 |
| 225 | 250 | | | | | | | | | | | | | 138 | 84 | | | | | | | | | | | | | | |

Note: (1) Δdmp specified in JIS B 1514.

### Table 8.11.2 Outer Ring with Housing

Unit: μm

| Nominal dimensions (mm) | | Deviation of single plane mean outer dia. of bearing (1) | | Housing with tolerance grade IT6 | | | | | | Housing with tolerance grade IT7 | | | | | | | | | | | | | |
|---|---|---|---|---|---|---|---|---|---|---|---|---|---|---|---|---|---|---|---|---|---|---|---|
| | | | | K6 | | J6 | | H6 | | P7 | | N7 | | M7 | | K7 | | J7 | | H7 | | G7 | |
| | | | | Tight | Loose | Tight | Loose | Tight | Loose | Tight | | Tight | Loose | Tight | Loose | Tight | Loose | Tight | Loose | Tight | Loose | Loose | |
| Over | Incl. | High | Low | Max | Max | Max | Max | Max | Max | Max | Min | Max | Max | Max | Max | Max | Max | Max | Max | Max | Max | Min | Max |
| 6 | 10 | 0 | –7 | 7 | 9 | 4 | 12 | 0 | 16 | 24 | 2 | 19 | 3 | 15 | 7 | 10 | 12 | 7 | 15 | 0 | 22 | 5 | 27 |
| 10 | 18 | 0 | –7 | 9 | 9 | 5 | 13 | 0 | 18 | 29 | 4 | 23 | 2 | 18 | 7 | 12 | 13 | 8 | 17 | 0 | 25 | 6 | 31 |
| 18 | 30 | 0 | –8 | 11 | 10 | 5 | 16 | 0 | 21 | 35 | 6 | 28 | 1 | 21 | 8 | 15 | 14 | 9 | 20 | 0 | 29 | 7 | 36 |
| 30 | 50 | 0 | –9 | 13 | 12 | 6 | 19 | 0 | 25 | 42 | 8 | 33 | 1 | 25 | 9 | 18 | 16 | 11 | 23 | 0 | 34 | 9 | 43 |
| 50 | 80 | 0 | –11 | 15 | 15 | 6 | 24 | 0 | 30 | 51 | 10 | 39 | 2 | 30 | 11 | 21 | 20 | 12 | 29 | 0 | 41 | 10 | 51 |
| 80 | 120 | 0 | –13 | 18 | 17 | 6 | 29 | 0 | 35 | 59 | 11 | 45 | 3 | 35 | 13 | 25 | 23 | 13 | 35 | 0 | 48 | 12 | 60 |
| 120 | 150 | 0 | –15 | 21 | 19 | 7 | 33 | 0 | 40 | 68 | 13 | 52 | 3 | 40 | 15 | 28 | 27 | 14 | 41 | 0 | 55 | 14 | 69 |
| 150 | 180 | 0 | –18 | 21 | 22 | 7 | 36 | 0 | 43 | 68 | 10 | 60 | 6 | 40 | 18 | 28 | 30 | 14 | 44 | 0 | 58 | 14 | 72 |
| 180 | 250 | 0 | –20 | 24 | 25 | 7 | 42 | 0 | 49 | 79 | 13 | 60 | 6 | 46 | 20 | 33 | 33 | 16 | 50 | 0 | 66 | 15 | 81 |
| 250 | 315 | 0 | –25 | 27 | 30 | 7 | 50 | 0 | 57 | 88 | 11 | 66 | 11 | 52 | 25 | 36 | 41 | 16 | 61 | 0 | 77 | 17 | 94 |
| 315 | 400 | 0 | –280 | 29 | 35 | 7 | 57 | 0 | 64 | 98 | 13 | 73 | 12 | 57 | 28 | 40 | 45 | 18 | 67 | 0 | 85 | 18 | 103 |

Note: (1) ΔDmp specified in JIS B 1514.

## Table 8.12 Amounts of Fits: Radial Bearings with Tolerance JIS (ISO) Class 5

### Table 8.12.1 Inner Ring with Shaft

Unit: μm

| Nominal dimensions (mm) | | Deviation of single plane mean bore dia. of bearing (1) | | Shaft with tolerance grade IT4 | | | | | | | | Shaft with tolerance grade IT5 | | | |
|---|---|---|---|---|---|---|---|---|---|---|---|---|---|---|---|
| | | | | m4 | | k4 | | js4 | | h4 | | m5 | | h5 | |
| | | | | Tight | | Tight | | Tight | Loose | Tight | Loose | Tight | | Tight | Loose |
| Over | Incl. | High | Low | Max | Min | Max | Min | Max | Max | Max | Max | Max | Min | Max | Max |
| 3 | 6 | 0 | –5 | 13 | 4 | 10 | 1 | 7 | 2 | 5 | 4 | 14 | 4 | 5 | 5 |
| 6 | 10 | 0 | –5 | 15 | 6 | 10 | 1 | 7 | 2 | 5 | 4 | 17 | 6 | 5 | 6 |
| 10 | 18 | 0 | –5 | 17 | 7 | 11 | 1 | 7.5 | 2.5 | 5 | 5 | 20 | 7 | 5 | 8 |
| 18 | 30 | 0 | –6 | 20 | 8 | 14 | 2 | 9 | 3 | 6 | 6 | 23 | 8 | 6 | 9 |
| 30 | 50 | 0 | –8 | 24 | 9 | 17 | 2 | 11.5 | 3.5 | 8 | 7 | 28 | 9 | 8 | 11 |
| 50 | 80 | 0 | –9 | 28 | 11 | 19 | 2 | 13 | 4 | 9 | 8 | 33 | 11 | 9 | 13 |
| 80 | 120 | 0 | –10 | 33 | 13 | 23 | 3 | 15 | 5 | 10 | 10 | 38 | 13 | 10 | 15 |
| 120 | 180 | 0 | –13 | 40 | 15 | 28 | 3 | 19 | 6 | 13 | 12 | 46 | 15 | 13 | 18 |
| 180 | 250 | 0 | –15 | 46 | 17 | 33 | 4 | 22 | 7 | 15 | 14 | 52 | 17 | 15 | 20 |

Note: (1) Δdmp specified in JIS B 1514.

### Table 8.12.2 Outer Ring with Housing

Unit: μm

| Nominal dimensions (mm) | | Deviation of single plane mean outer dia. of bearing (1) | | Housing with tolerance grade IT5 | | | | | | | |
|---|---|---|---|---|---|---|---|---|---|---|---|
| | | | | M5 | | K5 | | Js5 | | H5 | |
| | | | | Tight | Loose | Tight | Loose | Tight | Loose | Tight | Loose |
| Over | Incl. | High | Low | Max | Max | Max | Max | Max | Max | Max | Max |
| 6 | 10 | 0 | –5 | 10 | 1 | 5 | 6 | 3 | 8 | 0 | 11 |
| 10 | 18 | 0 | –5 | 12 | 1 | 6 | 7 | 4 | 9 | 0 | 13 |
| 18 | 30 | 0 | –6 | 14 | 1 | 8 | 7 | 4.5 | 10.5 | 0 | 15 |
| 30 | 50 | 0 | –7 | 16 | 2 | 9 | 9 | 5.5 | 12.5 | 0 | 18 |
| 50 | 80 | 0 | –9 | 19 | 3 | 10 | 12 | 6.5 | 15.5 | 0 | 22 |
| 80 | 120 | 0 | –10 | 23 | 2 | 13 | 12 | 7.5 | 17.5 | 0 | 25 |
| 120 | 150 | 0 | –11 | 27 | 2 | 15 | 14 | 9 | 20 | 0 | 29 |
| 150 | 180 | 0 | –13 | 27 | 4 | 15 | 16 | 9 | 22 | 0 | 31 |
| 180 | 250 | 0 | –15 | 31 | 4 | 18 | 17 | 10 | 25 | 0 | 35 |
| 250 | 315 | 0 | –18 | 36 | 5 | 20 | 21 | 11.5 | 29.5 | 0 | 41 |
| 315 | 400 | 0 | –20 | 39 | 6 | 22 | 23 | 12.5 | 32.5 | 0 | 45 |

Note: (1) ΔDmp specified in JIS B 1514.





## Table 8.13 Amounts of Fits: Radial Bearings with Tolerance JIS (ISO) Class 4

### Table 8.13.1 Inner Ring with Shaft

Unit: μm

| Nominal dimensions (mm) | | Deviation of single plane mean bore dia. of bearing (1) | | Shaft with tolerance grade IT4 | | | | | | | | Shaft with tolerance grade IT5 | | | |
|---|---|---|---|---|---|---|---|---|---|---|---|---|---|---|---|
| | | | | m4 | | k4 | | js4 | | h4 | | m5 | | h5 | |
| | | | | Tight | | Tight | | Tight | Loose | Tight | Loose | Tight | | Tight | Loose |
| Over | Incl. | High | Low | Max | Min | Max | Min | Max | Max | Max | Max | Max | Min | Max | Max |
| 3 | 6 | 0 | –4 | 12 | 4 | 9 | 1 | 6 | 2 | 4 | 4 | 13 | 4 | 4 | 5 |
| 6 | 10 | 0 | –4 | 14 | 6 | 9 | 1 | 6 | 2 | 4 | 4 | 16 | 6 | 4 | 6 |
| 10 | 18 | 0 | –4 | 16 | 7 | 10 | 1 | 6.5 | 2.5 | 4 | 5 | 19 | 7 | 4 | 8 |
| 18 | 30 | 0 | –5 | 19 | 8 | 13 | 2 | 8 | 3 | 5 | 6 | 22 | 8 | 5 | 9 |
| 30 | 50 | 0 | –6 | 22 | 9 | 15 | 2 | 9.5 | 3.5 | 6 | 7 | 26 | 9 | 6 | 11 |
| 50 | 80 | 0 | –7 | 26 | 11 | 17 | 2 | 11 | 4 | 7 | 8 | 31 | 11 | 7 | 13 |
| 80 | 120 | 0 | –8 | 31 | 13 | 21 | 3 | 13 | 5 | 8 | 10 | 36 | 13 | 8 | 15 |
| 120 | 180 | 0 | –10 | 37 | 15 | 25 | 3 | 16 | 6 | 10 | 12 | 43 | 15 | 10 | 18 |
| 180 | 250 | 0 | –12 | 43 | 17 | 30 | 4 | 19 | 7 | 12 | 14 | 49 | 17 | 12 | 20 |

Note: (1) Δdmp specified in JIS B 1514.

### Table 8.13.2 Outer Ring with Housing

Unit: μm

| Nominal dimensions (mm) | | Deviation of single plane mean outer dia. of bearing (1) | | Housing with tolerance grade IT5 | | | | | | | |
|---|---|---|---|---|---|---|---|---|---|---|---|
| | | | | M5 | | K5 | | Js5 | | H5 | |
| | | | | Tight | Loose | Tight | Loose | Tight | Loose | Tight | Loose |
| Over | Incl. | High | Low | Max | Max | Max | Max | Max | Max | Max | Max |
| 6 | 10 | 0 | –4 | 10 | 0 | 5 | 5 | 3 | 7 | 0 | 10 |
| 10 | 18 | 0 | –4 | 12 | 0 | 6 | 6 | 4 | 8 | 0 | 12 |
| 18 | 30 | 0 | –5 | 14 | 0 | 8 | 6 | 4.5 | 905 | 0 | 14 |
| 30 | 50 | 0 | –6 | 16 | 1 | 9 | 8 | 5.5 | 11.5 | 0 | 17 |
| 50 | 80 | 0 | –7 | 19 | 1 | 10 | 10 | 6.5 | 13.5 | 0 | 20 |
| 80 | 120 | 0 | –8 | 23 | 0 | 13 | 10 | 7.5 | 15.5 | 0 | 23 |
| 120 | 150 | 0 | –9 | 27 | 0 | 15 | 12 | 9 | 18 | 0 | 27 |
| 150 | 180 | 0 | –10 | 27 | 1 | 15 | 13 | 9 | 19 | 0 | 28 |
| 180 | 250 | 0 | –11 | 31 | 0 | 18 | 13 | 10 | 21 | 0 | 31 |
| 250 | 315 | 0 | –13 | 36 | 0 | 20 | 16 | 11.5 | 24.5 | 0 | 36 |
| 315 | 400 | 0 | –15 | 39 | 1 | 22 | 18 | 12.5 | 27.5 | 0 | 40 |

Note: (1) ΔDmp specified in JIS B 1514.

**Table 8.14 Amounts of Fits: Thrust Bearings with Tolerance JIS (ISO) Class 0**

**Table 8.14.1 Shaft Washer or Center Washer with Shaft**

Unit: μm

| Nominal dimensions (mm) | | Deviation of single plane mean bore dia. of bearing (1) | | Shaft with tolerance grade IT6 | | | | | | | |
|---|---|---|---|---|---|---|---|---|---|---|---|
| | | | | n6 | | m6 | | k6 | | j6 | |
| | | | | Tight | | Tight | | Tight | | Tight | Loose |
| Over | Incl. | High | Low | Max | Min | Max | Min | Max | Min | Max | Max |
| 6 | 10 | 0 | –8 | — | — | — | — | 18 | 1 | 15 | 2 |
| 10 | 18 | 0 | –8 | — | — | — | — | 20 | 1 | 16 | 3 |
| 18 | 30 | 0 | –10 | — | — | — | — | 25 | 2 | 19 | 4 |
| 30 | 50 | 0 | –12 | — | — | — | — | 30 | 2 | 23 | 5 |
| 50 | 80 | 0 | –15 | — | — | — | — | 36 | 2 | 27 | 7 |
| 80 | 120 | 0 | –20 | — | — | — | — | 45 | 3 | 33 | 9 |
| 120 | 180 | 0 | –25 | — | — | — | — | 53 | 3 | 39 | 11 |
| 180 | 250 | 0 | –30 | — | — | 76 | 17 | 63 | 4 | 46 | 13 |
| 250 | 315 | 0 | –35 | — | — | 87 | 20 | — | — | 51 | 16 |
| 315 | 400 | 0 | –40 | — | — | 97 | 21 | — | — | 58 | 18 |
| 400 | 500 | 0 | –45 | 125 | 40 | — | — | — | — | 65 | 20 |

Note: (1) Δdmp specified in JIS B 1514.

**Table 8.14.2 Housing Washer with Housing**

Unit: μm

| Nominal dimensions (mm) | | Deviation of single plane mean outer dia. of bearing (1) | | Housing with tolerance grade IT7 | | | |
|---|---|---|---|---|---|---|---|
| | | | | M7 | | H7 | |
| | | | | Tight | Loose | Tight | Loose |
| Over | Incl. | High | Low | Max | Max | Max | Max |
| 10 | 18 | 0 | –11 | 18 | 11 | 0 | 29 |
| 18 | 30 | 0 | –13 | 21 | 13 | 0 | 34 |
| 30 | 50 | 0 | –16 | 25 | 16 | 0 | 41 |
| 50 | 80 | 0 | –19 | 30 | 19 | 0 | 49 |
| 80 | 120 | 0 | –22 | 35 | 22 | 0 | 57 |
| 120 | 180 | 0 | –25 | 40 | 25 | 0 | 65 |
| 180 | 250 | 0 | –30 | 46 | 30 | 0 | 76 |
| 250 | 315 | 0 | –35 | 52 | 35 | 0 | 87 |
| 315 | 400 | 0 | –40 | 57 | 40 | 0 | 97 |
| 400 | 500 | 0 | –45 | 63 | 45 | 0 | 108 |

Note: (1) ΔDmp specified in JIS B 1514.





## 8.1.3 Calculating Fits

The fits for bearings are often determined empirically according to Table 8.1 through Table 8.14. These tables are NOT to be used for the following cases:

- If special materials are used for interfaces.
- If a hollow shaft is used.
- For high-precision applications.

(1) Reduction of Interference due to Bearing Load

When load is applied through a rotating inner ring, the ring will deform slightly and a gap will occur between the ring and the shaft at a position 180° from the point of load. This gap and "arc-of-no-contact" will increase as the load becomes heavier. A gearing effect will also occur due to the difference in diameters of rotation of the interfacing parts.

Formula (8.1) and Fig. 8.1 define the reduction (millimeters) in interference fit of the inner ring due to bearing load.

$$\Delta dF = 0.08 \times 10^{-3} \sqrt{\frac{d}{B} Fr} \quad \cdots\cdots (8.1)$$

where:

ΔdF : Reduction in interference of inner ring fit due to bearing load (mm)
d : Bearing bore (shaft diameter) (mm)
B : Bearing inner ring width (mm)
Fr : Radial load on the bearing (N)

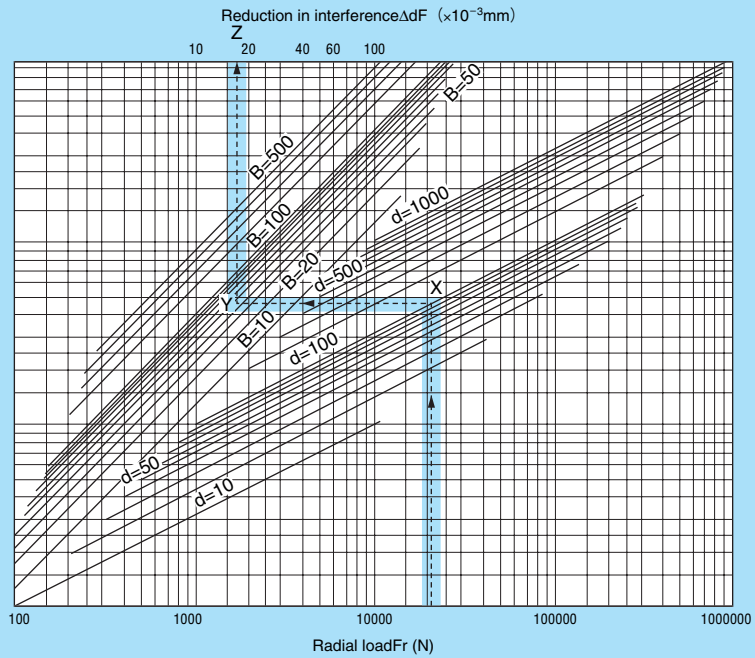


**Fig. 8.1 Change in interference due to load**

If the radial load is greater than 20% of the basic static load rating Cor, Formula (8.2) is to be used.

$$\Delta dF \geqq 0.02 \times 10^{-3} \frac{Fr}{B} \quad \cdots\cdots (8.2)$$

Calculation example: 6
Object: to obtain the amount of reduction in interference from bearing load where Fr on a single-row, Deep-groove ball bearing number 6320 is 21000N.
From the dimensional tables, d=100 mm, B=47 mm. From Fig. 8.1;
(a) Find 21000 on the line of Fr. Move vertically and intersect the line of d=100 (at point X).
(b) From the point X, move parallel with line Fr and intersect the line of B=47 (at point Y).
(c) Extend vertically from point Y. The intercept with the chart upper limit at point Z indicates the reduction dF (mm) of interference. In this case, ΔdF loss=0.017 (mm).

(2) Reduction in Interference due to temperature difference
Operating temperature differences will generally exist between the inner ring and shaft or the outer ring and bearing housing. Fits must be adjusted for differences of thermal expansion coefficients in the mating materials.

- If the bearing temperature is higher than that of the shaft, increase the fit.
- If heat is transferred through the shaft, the fit becomes tighter due to thermal expansion of the shaft. In such cases, increase the radial internal clearance of the bearing.

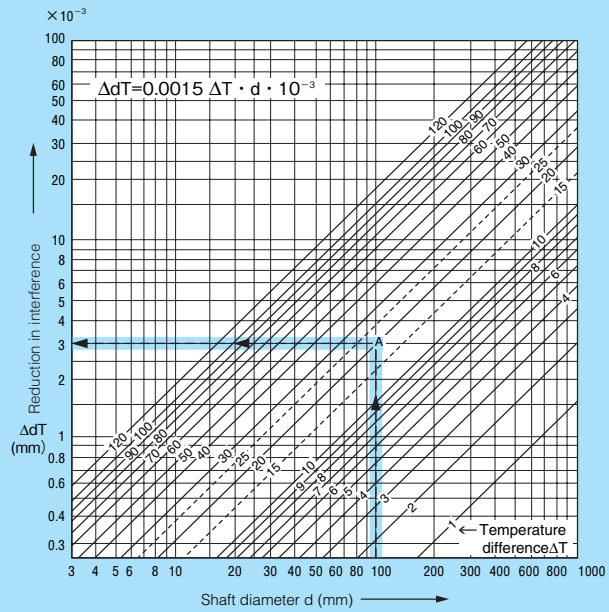


**Fig. 8.2 Reduction in Interference of Inner Ring Due to Temperature Difference**





- When the outer ring temperature is higher than the housing, reduce the fit with the housing and the radial internal clearance of the bearing.
- If the housing temperature is hotter than the bearing outer ring, check the rates of thermal expansion. It will probably be necessary to increase the fit due to larger growth of the housing bore.

Reduction of interference fit of the inner ring due to temperature differentials can be calculated using Formula (8.3) and Fig. 8.2.

$$\Delta dT = 0.0015\, \Delta T \cdot d \cdot 10^{-3} \quad \cdots\cdots (8.3)$$

where:
ΔdT : Reduction in interference of inner ring fit due to temperature difference (mm)
ΔT : Temperature difference between bearing and housing ambient (°C)
d : Bearing bore (shaft diameter) (mm)

Calculation example: 7
Obtain the reduction in interference for a temperature difference of 20°C existing between housing ambient temperature and internal temperature of a bearing with a bore diameter of 100 mm. From Fig. 8.2.
(a) Find the bore diameter d=100 on the horizontal axis. Draw a vertical line from the point until it intersects the line of temperature difference of 20°C at point A.
(b) Extend a line horizontally from point A left to the Y-axis. The reduction in interference can be read from the intersection with the vertical axis as ΔdT=0.003mm.

(3) Surface Finish Effects on Interference
Since surface asperities are subjected to smoothing when bearings are press-fit, the effective fit becomes smaller than the calculated fit. The amount of reduction in fit is dependent on the surface finish of the interfacing materials.

Effective fit of the inner ring to a solid shaft is calculated using Formulas (8.4.1), and (8.4.2).
For ground and polished shafts,

$$\Delta de = \frac{d}{d+2} \Delta da \quad \cdots\cdots (8.4.1)$$

For turned shafts,

$$\Delta de = \frac{d}{d+3} \Delta da \quad \cdots\cdots (8.4.2)$$

where:
Δde : Effective interference (mm)
Δda : Calculated interference (mm)
d : Bearing bore diameter (mm)

(4) Necessary Interference for Inner Rings
Formulas (8.1), (8.2), (8.3), (8.4.1) and (8.4.2) have been used to calculate the effects of Load, Temperature, and Surface Finish in interference. To summarize the effects to a total required interference for the inner ring and shaft (where inner ring rotates against load), refer to Formulas (8.5.1) and (8.5.2).
For ground and polished shafts,

$$\Delta da \geqq (\Delta dF + \Delta dT)\left(\frac{d+2}{d}\right) \quad \cdots\cdots (8.5.1)$$

For turned shafts,

$$\Delta da \geqq (\Delta dF + \Delta dT)\left(\frac{d+3}{d}\right) \quad \cdots\cdots (8.5.2)$$

(5) Tensile Stress from Fits
When interference is provided, the bearing ring undergoes tensile stress. If the stress is excessive, the bearing ring will be damaged. When an inner ring is fitted to a solid steel shaft, stress, $\sigma_i$, should be limited to 100MPa or smaller using Formula (8.6). Empirically, the criterion of interference 0.001 of shaft diameter.

$$\sigma_i = \frac{E}{2} \cdot \frac{\Delta de}{d} \left\{1 + \left(\frac{d}{di}\right)^2\right\} \quad \cdots\cdots (8.6)$$

where:

$\sigma_i$ : Maximum tensile stress of inner ring (MPa)

E : Young's modulus for steel: $2.07 \times 10^5$ (MPa)

$\Delta de$ : Effective interference (mm)

d : Bearing bore diameter (mm)

di : Mean outside diameter of inner ring (mm)

Cylindrical roller bearings; and Self-aligning ball bearings of series 22 and 23:

di≒0.25(D+3d)

All other bearings:

di≒0.1(3D+7d)

where:

D: Bearing outside diameter (mm)

(6) Fits for Inner Rings with Hollow Shaft

Equivalent effective fit for a hollow shaft.

(a) Obtain the interference, $\Delta da$ for a solid shaft of the identical diameter inner ring with either Table 8.4 or Formulas (8.5.1) and (8.5.2).

(b) Calculate interference $\Delta dha$ for a hollow shaft and inner ring with Formula (8.7).

$$\Delta dha = \frac{1 - \left(\frac{d_h}{di}\right)^2}{1 - \left(\frac{d_h}{d}\right)^2} \Delta da \quad \cdots\cdots (8.7)$$

where:

$\Delta dha$ : Calculated interference of hollow shaft (mm)

$d_h$ : Bore diameter of hollow shaft (mm). For solid shaft, $d_h = 0$

d : bearing bore diameter (mm)

$\Delta da$ : Calculated interference of solid shaft and inner ring (mm)

(c) Tensile stress of inner ring from fits for hollow steel shaft is calculated using Formula (8.8).

$$\sigma_i = \frac{E}{2} \cdot \frac{\Delta de}{d} \cdot \frac{\left\{1 - \left(\frac{d_h}{d}\right)^2\right\}\left\{1 + \left(\frac{d}{di}\right)^2\right\}}{\left\{1 - \left(\frac{d_h}{di}\right)^2\right\}} \quad \cdots\cdots (8.8)$$

(7) Outer Ring to Housing Fits

Interference fit must be provided between the outer ring and housing where there is rotating outer ring load or indeterminate load. Fits for outer ring and steel housing can be obtained by using Table 8.6





## 8.1.4 Selection of Bearing Clearance

The internal clearance of rolling contact bearings during operation (the operating clearance) is a factor which can affect bearing life, vibration, heat, sound, etc.

Theoretically, bearing life is maximum if bearings operate with a slight preload (a slight negative operating clearance). If a bearing is to operate with a slight preload, great care must be taken in the analysis and design of the application to be sure that preloads do not begin to rise during the bearing operation to a level which will lead to an upward spiraling of heat=greater preload=more heat=early bearing failure. And also a bearing with an excessive operating clearance will not perform its maximum load capability.

To prevent clearance problems, unmounted bearing clearance should be selected so that operating clearance will be slightly positive. (Note that bearings chosen for precision location functions are preloaded, but the amount of preload must be precisely controlled at assembly).

For non-separable, radial bearings, and for radial Cylindrical roller bearings, which are assembled in clearance groups with a set amount of "unmounted" internal clearance; the initial internal clearance will be the unmounted clearance minus clearance losses from mounting fits.

Typical clearance groups for the above types of bearings are:

C2: less than Normal clearance

CN: Normal clearance

C3: more than Normal clearance

CN (Normal) internal clearance is determined so that appropriate clearance will remain after the bearing is mounted to the shaft with an interference fit, but with no fit (no interference) between the outer ring and housing and the temperature difference between inner and outer ring is 10°C or less.

Table 8.15 indicates examples of selection for clearance groups other than CN (Normal) internal clearance.

Bearing clearance varies during operation with respect to the temperature rise and the type and magnitude of load. For example, if large reduction of clearance is expected, more initial clearance is required.

**Table 8.15 Examples of Clearance Selection other than CN (Normal) Clearance**

| Application conditions | Clearance Selection | Examples of application (reference) |
|---|---|---|
| Large interference for heavy or impact load | C3 clearance or larger | Railroad car axle |
| Interference required for both inner and outer rings due to indeterminate heavy impact load | | Traction motor |
| Inner ring is exposed to high temperature<br>Outer ring is exposed to low temperature | | Pulp and paper machine dryer<br>For outdoor use in cold area |
| When shaft has a large deflection<br>For increasing axial load capacity by increasing contact angle. | | Semi-floating axle for automobiles<br>Bearing of rail road car axle for carring axial load |
| When both inner and outer rings are clearance fitted | C2 clearance or smaller | Roll neck of rolling machine |
| For controlling vibration and sound | | Small, special electric motors |
| For post assembly adjustment of clearance such as controlling run-out of shaft, etc. | C9na、C1na | Cylindrical roller bearing for lathe main shaft |

Fig. 8.3 illustrates radial clearance of a single-row Deep-groove ball bearing.

(1) Operating Clearance

Operating clearance is defined as the clearance of a bearing operating in a machine at the operating temperature and load.

$$\Delta = \Delta o - (\delta t + \delta f) + \delta w \quad \cdots\cdots (8.10)$$

where:

- $\Delta$ : Operating clearance (mm)
- $\Delta o$ : unmounted bearing clearance
- $\delta t$ : Variation of clearance from temperature difference between inner and outer rings (mm)
- $\delta f$ : Reduction in clearance due to the fit of inner and outer rings (mm)
- $\delta w$ : Increase of clearance due to load (mm)

(2) Internal clearance reduction due to temperature difference between inner and outer rings

Under normal operating conditions, the temperature of the rolling contact bearing components is, in ascending order from the lowest to the highest; the outer ring, the inner ring, and the rolling elements.

Since it is extremely difficult to measure the temperature of the rolling elements, operating temperature is calculated under the assumption that the temperature of the rolling element is equal to that of the inner ring. Therefore, the reduction in clearance due to temperature difference between the inner and outer rings can be obtained by the following formula:

$$\delta t = \alpha \cdot \Delta T \cdot Do \quad \cdots\cdots (8.11)$$

where:

- $\delta t$ : Reduction in clearance due to temperature difference between inner and outer rings (mm)
- $\alpha$ : Linear expansion coefficient of bearing steel: $1.12 \times 10^{-5}$ (1/°C) for operating temperature 300°C or less
- $\Delta T$ : Temperature difference between the inner and outer rings (°C)
- Do : Outer ring raceway diameter (mm)

Do≒0.2(4D+d) for Deep-groove ball bearings and Spherical roller bearings.

Do≒0.25(3D+d) for Cylindrical roller bearings.

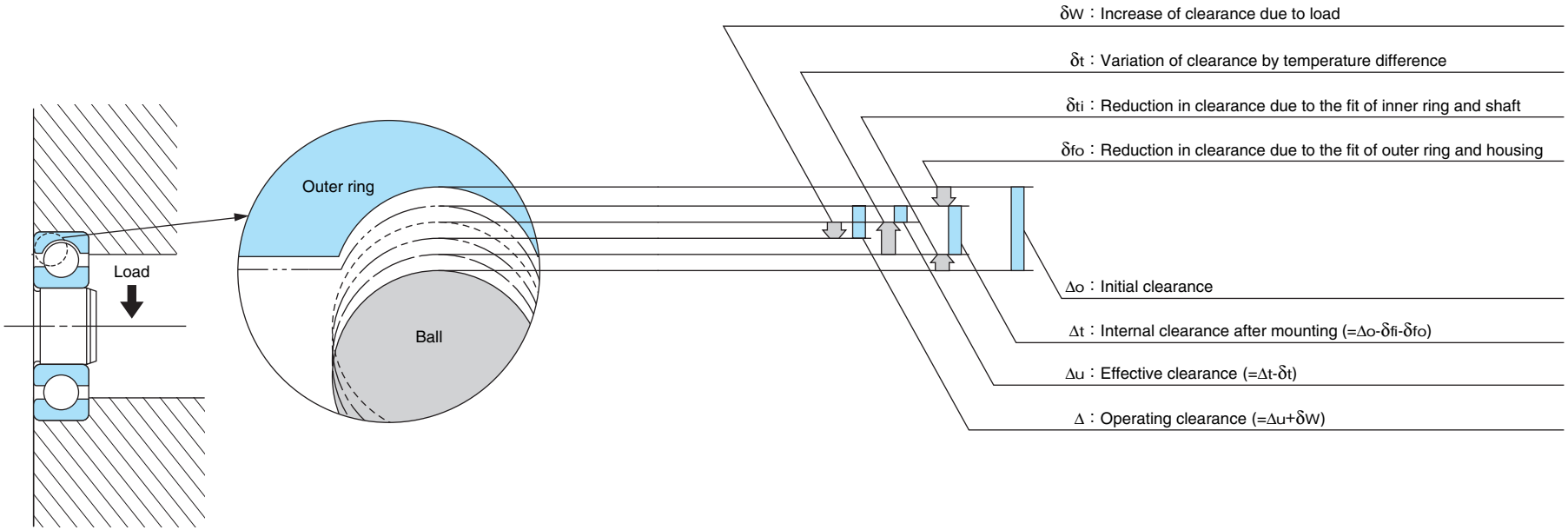


**Fig. 8.3 Radial clearance of bearing**

(3) Reduction in clearance due to fit

When a bearing is mounted to a shaft or housing with an interference fit, the inner ring will expand or the outer ring will contract (due to the fit), causing reduction in the bearing internal clearance. Reduction in clearance due to fit can be calculated from the following formula:

$$\delta f = \delta fi + \delta fo \quad \cdots\cdots (8.12)$$

where:

- $\delta f$ : Reduction in clearance due to fit (mm)
- $\delta fi$ : Reduction in clearance due to expansion of the inner ring (mm)
- $\delta fo$ : Reduction in clearance due to the contraction of the outer ring (mm)

$$\delta fi = \Delta de \cdot \frac{d}{di} \cdot \frac{1-\left(\frac{dh}{d}\right)^2}{1-\left(\frac{dh}{di}\right)^2} \quad \cdots\cdots (8.13)$$

$$\delta fo = \Delta De \cdot \frac{De}{D} \cdot \frac{1-\left(\frac{D}{Dh}\right)^2}{1-\left(\frac{De}{Dh}\right)^2} \quad \cdots\cdots (8.14)$$

where:

- $\Delta de$ : Effective interference of the inner ring (mm)
- d : Bearing bore diameter (mm)
- di : Mean outside diameter of inner ring (mm)
- dh : Inside diameter of hollow shaft (mm) (Note): For solid shaft, dh=0
- $\Delta De$ : Effective interference of outer ring (mm)
- D : Bearing outside diameter (mm)
- De : Mean inside diameter of outer ring (mm)
- Dh : Housing outside diameter (mm) (Note: If the housing is a rigid body, Dh=∞.

di≒0.25(D+3d) for Cylindrical roller bearings and Self-aligning Ball bearings of bearing series 22 and 23

di≒0.1(3D+7d) for other bearings

De≒0.25(3D+d) for Cylindrical roller bearings and Self-aligning Ball bearings of bearing series 22 and 23

De≒0.1(7D+3d) for other bearings

For estimating δf, the following may be used:

δf=0.7 (Δde+ΔDe) to 0.9 (Δde+δDe),

with smaller values for heavy-section bearings (e.g. bearings of diameter series 4) and larger values for light-section bearing rings. (e.g. bearings of diameter series 9)

(4) Increase of clearance due to load

When a bearing is subjected to a load, elastic deformation will occur and this deformation will cause an increase in internal clearance. Table 8.16 outlines elastic deformation δr and δa.





**Table 8.16 Load and Elastic Displacement**

| Bearing Types | Approximation of displacement from radial load δr (mm) | Approximation of displacement from axial load δa (mm) |
|---|---|---|
| Self-Aligning Ball Bearings | $\delta r = \frac{0.00070}{\cos\alpha}\sqrt[3]{\frac{Po^2}{Dw}}$ | $\delta a = \frac{0.00070}{\sin\alpha}\sqrt[3]{\frac{P^2}{Dw}}$ |
| Deep groove ball bearings, angular contact ball bearings | $\delta r = \frac{0.00044}{\cos\alpha}\sqrt[3]{\frac{Po^2}{Dw}}$ | $\delta a = \frac{0.00044}{\sin\alpha}\sqrt[3]{\frac{P^2}{Dw}}$ |
| Spherical Roller Bearings | $\delta r = \frac{0.00018}{\cos\alpha}\sqrt[4]{\frac{Po^3}{Lwe^2}}$ | $\delta a = \frac{0.00018}{\sin\alpha}\sqrt[4]{\frac{P^3}{Lwe^2}}$ |
| Cylindrical roller bearings, Tapered roller bearings | $\delta r = \frac{0.000077}{\cos\alpha} \cdot \frac{Po^{0.9}}{Lwe^{0.8}}$ | $\delta a = \frac{0.000077}{\sin\alpha} \cdot \frac{P^{0.9}}{Lwe^{0.8}}$ |
| Thrust Ball Bearings | — | $\delta a = \frac{0.00052}{\sin\alpha}\sqrt[3]{\frac{P^2}{Dw}}$ |
| Po and P | $Po = \frac{5Fr}{iz\cos\alpha}$ | $P = \frac{Fa}{z\sin\alpha}$ |

where:
Fr = Radial load (N)
Fa = Axial load (N)
α = contact angle(°)
Dw = Diameter of ball or roller (mm)
Lwe =Effective roller length (mm)
i =Number of rows of ball or roller
z =Number of ball or roller per row

# 8.2 Preload and Rigidity

Generally, rolling contact bearings are mounted so that in operation, there will be a small amount of internal clearance. Applications may sometimes require that the bearings be provided with appropriate negative clearance called “preload” when assembled.
Preload has various purposes and effects. Since an incorrect amount of preload may adversely affect the rolling resistance, life, temperature rise, sound, etc. of bearings; extreme care must be taken when applying preload.

## 8.2.1 Purposes of Preload

(1) Increases rigidity of a shaft (that is, preloading can help to decrease the deflection of shafting).
(2) Enhances rotating accuracy of shaft. Minimizes axial movements and helps to prevent vibration and decrease noise.
(3) Prevents fretting caused by external vibration.

Item 1 and 2 are pertinent with respect to proper gear engagement, rotating accuracy of precision machinery and resonance of electric motor rotors.

## 8.2.2 Preloading Method and Measurement

(1) Preloading method
Preloading can be accomplished using one or more of the following methods:

a) Use of springs (disc and coil springs) “Constant-pressure” preloading.

b) Use of clamping nut “Fixed-position” preloading.

c) Use of spacer (spacer and shim) “Fixed-position” preloading.

**Fig. 8.4 Axial Load and Axial Displacement**

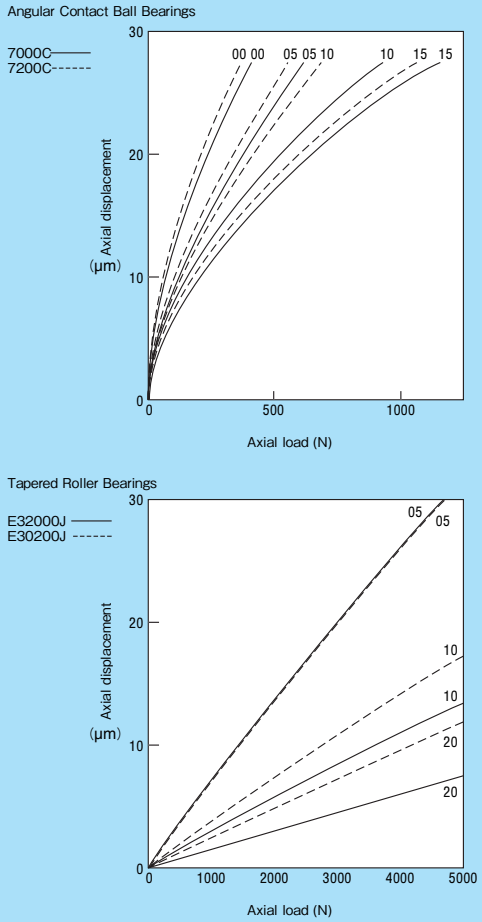






**Fig. 8.5 Description of Fixed Position Preloading**

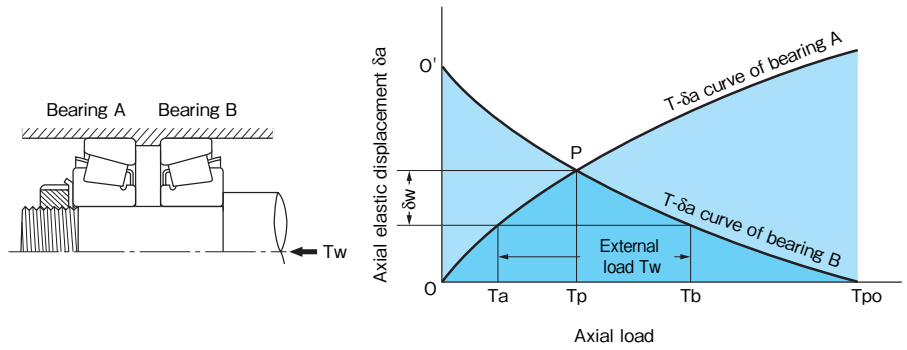


(2) Measurement of preloading amount
a) Measuring method using axial load.
- If preloading is done using springs, the preloading amount is determined by the amount of spring displacement.
- If preloading is done using a clamping nut, the preload amount is determined by the relationship of the fastening torque of the nut and clamping force.

b) Measuring method using the bearing axial displacement (Fig. 8.4).
Preload amount is determined by relationship of axial load on the bearing and resulting axial displacement.

c) Measuring method using start-up friction torque of the bearing. Relationship between axial load and friction torque should be known for this method.

## 8.2.3 Effect of Preloading

To illustrate the effects of preloading on a duplex Tapered roller bearing set, apply the formula from Table 8.16 to calculate a set of curves for bearing A and bearing B. The example bearing set (see Fig. 8.5) is preloaded (fixed-position), and external load, Tw, is applied.
Load distribution to the two units of bearing in terms of the axial displacement will be calculated using the graphical solution procedures described as follows:
(1) Draw T-δa curve of bearing A.
(2) Take preload Tp on axis T, determine intersection P with the curve of bearing A, and draw T-δa curve of bearing B through point P.
(3) Connect the two curves with a length equivalent to the value of external load Tw.
(4) Load Ta and Tb equivalent to this point will become the load of the individual bearings under external load Tw.
(5) Disposition of bearing is obtained by the disposition δw of bearing B.

The disposition of bearing B will be obtained by subtracting disposition to Tp from the counterpart to Tb. The reason for this is that if the bearings are preloaded, the disposition of both bearings becomes constant within a range where preload is not offset to zero by an external load (O - O' in Fig. 8.5 is constant). In other words, bearing A becomes loosened by the amount displaced by the external load on bearing B. If the external load increases and preload is eliminated, load Tb on bearing B will be equal to the external load Tw and the load on bearing A becomes zero. Magnitude of the external load causing loss of preload is represented by Tpo in Fig. 8.5.

## 8.2.4 Duplex Bearing Preload, Clearance

The preload of duplex bearings can be defined as the clearance, 2A as shown in Fig. 8.6.

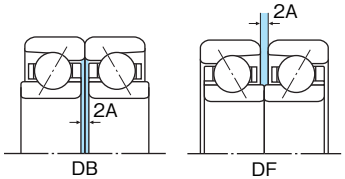


**Fig 8.6**

If preloading is an application necessity, it is very important that a very thorough application analysis is made, since, if an excessive amount of preload is applied, there can be abnormal heating, increase in rotating torque and / or a sharp drop in bearing life. Table 8.17 shows standard preload and Table 8.18 outlines target amount of fits for precision (tolerance class 5 or 4), Angular Contact ball bearings.

## 8.2.5 Thrust Bearing Minimum Axial Loads

When rotated at relatively high speeds, the contact angle between rolling elements and raceways of a thrust bearing changes due to centrifugal force. This can cause a skidding (sliding) action between the rolling elements and the raceways. This skidding action may cause smearing and scuffing on the rolling elements and raceway surfaces.

To prevent sliding action, thrust bearings must always be loaded with a minimum axial load. The minimum axial load is derived form Formulas (8.15), (8.16) and (8.17).

Thrust bearings can sustain axial load in only one direction. When a bi-directional axial load exists, preload must be provided by either using double bearings or springs (or load washers) to maintain the minimum axial load.

For vertical shafts, the axial load due to dead weight of the shaft (etc.), will often exceed the minimum axial load. Even in such cases, reversing axial loads may occur during operation causing the initial axial load to fall below the minimum load.

(1) Thrust ball bearing (adopt larger of values below)

$$F_{a\,min} = K \cdot n^2 \quad \cdots\cdots \quad (8.15)$$

$$F_{a\,min} = \frac{C_{oa}}{1000} \quad \cdots\cdots \quad (8.16)$$

where:

$F_{a\,min}$ : Minimum axial load (N)

K : Minimum axial load factor from Page 314.

n : Rotating speed ($min^{-1}$)

$C_{oa}$ : Basic static load rating (N)

(2) Spherical Roller Thrust Bearing

$$F_{a\,min} = \frac{C_{oa}}{1000} \quad \cdots\cdots \quad (8.17)$$





**Table 8.17 Standard Preload Amounts for Precision Combination Angular Contact Ball Bearings** Unit : N

| Preload / Bore Diameter Number | 7000C (DB、DF) | | | | 7200C (DB、DF) | | | | 7300C (DB、DF) | | | |
|---|---|---|---|---|---|---|---|---|---|---|---|---|
| | E | L | M | H | E | L | M | H | E | L | M | H |
| 00 | 20 | 50 | 100 | 145 | 30 | 70 | 145 | 195 | 50 | 100 | 195 | 295 |
| 01 | 20 | 50 | 100 | 145 | 30 | 70 | 145 | 195 | 50 | 100 | 195 | 295 |
| 02 | 20 | 50 | 100 | 145 | 30 | 70 | 145 | 195 | 50 | 100 | 195 | 295 |
| 03 | 20 | 50 | 100 | 145 | 30 | 70 | 145 | 195 | 50 | 100 | 195 | 295 |
| 04 | 50 | 100 | 195 | 295 | 70 | 145 | 295 | 490 | 100 | 195 | 390 | 590 |
| 05 | 50 | 100 | 195 | 295 | 70 | 145 | 295 | 490 | 100 | 195 | 390 | 590 |
| 06 | 50 | 100 | 195 | 390 | 70 | 145 | 295 | 590 | 100 | 195 | 390 | 685 |
| 07 | 70 | 145 | 295 | 390 | 100 | 195 | 490 | 590 | 145 | 295 | 590 | 685 |
| 08 | 70 | 145 | 295 | 590 | 100 | 195 | 490 | 785 | 145 | 295 | 590 | 980 |
| 09 | 70 | 145 | 295 | 590 | 100 | 195 | 490 | 785 | 145 | 295 | 590 | 980 |
| 10 | 70 | 145 | 295 | 590 | 100 | 195 | 490 | 785 | 145 | 295 | 590 | 980 |
| 11 | 100 | 195 | 390 | 785 | 145 | 295 | 590 | 980 | 195 | 390 | 785 | 1470 |
| 12 | 100 | 195 | 390 | 785 | 145 | 295 | 590 | 980 | 195 | 390 | 785 | 1470 |
| 13 | 100 | 195 | 390 | 785 | 145 | 295 | 590 | 980 | 195 | 390 | 785 | 1470 |
| 14 | 145 | 295 | 590 | 1170 | 195 | 390 | 785 | 1470 | 295 | 590 | 980 | 1960 |
| 15 | 145 | 295 | 590 | 1170 | 195 | 390 | 785 | 1470 | 295 | 590 | 980 | 1960 |
| 16 | 145 | 295 | 590 | 1170 | 195 | 390 | 785 | 1470 | 295 | 590 | 980 | 1960 |
| 17 | 195 | 390 | 785 | 1470 | 295 | 490 | 980 | 1960 | 390 | 785 | 1470 | 2940 |
| 18 | 195 | 390 | 785 | 1470 | 295 | 490 | 980 | 1960 | 390 | 785 | 1470 | 2940 |
| 19 | 195 | 390 | 785 | 1470 | 295 | 490 | 980 | 1960 | 390 | 785 | 1470 | 2940 |
| 20 | 195 | 390 | 785 | 1470 | 295 | 490 | 980 | 1960 | 390 | 785 | 1470 | 2940 |

**Table 8.18 Target Interference Values for Precision (tolerance class 5 or 4) Angular Contact Ball Bearings** Unit: μm

| Nominal bearing bore diameter d (mm) | | Shaft to inner ring | Nominal bearing outside diameter D (mm) | | Housing to outer ring |
|---|---|---|---|---|---|
| Over | Incl. | Tight | Over | Incl. | Loose |
| — | 18 | 0 ~ 2 | — | 18 | — |
| 18 | 30 | 0 ~ 3 | 18 | 30 | 2 ~ 6 |
| 30 | 50 | 0 ~ 3 | 30 | 50 | 2 ~ 6 |
| 50 | 80 | 0 ~ 4 | 50 | 80 | 3 ~ 9 |
| 80 | 120 | 0 ~ 4 | 80 | 120 | 3 ~ 9 |
| 120 | 150 | — | 120 | 150 | 4 ~ 12 |
| 150 | 180 | — | 150 | 180 | 4 ~ 12 |
| 180 | 250 | — | 180 | 250 | 5 ~ 15 |

Remark: Regarding the fit of housing and outer ring, take the smaller values of target clearance for the clamping side bearing and the larger values for the floating side.

# 8.3 Shaft and Housing Selection

Care must be taken in the design and manufacture of shafts and housings since inaccuracies in these components will probably result in poor bearing performance.

## 8.3.1 Accuracy and Surface Finish; Shafts and Housings

For general service conditions, the fit surfaces for shafts and housing bores for rolling contact bearings can be made using lathes or fine boring machines.

For applications requiring high-running accuracy, or for very quiet operation, or where high loads exist, a ground finish will be necessary.

Table 8.19 indicates the shaft and housing accuracy and surface roughness for normal service condition.

## 8.3.2 Shaft and Housing Design; Recommendations

- Design shafts as short as possible and of sufficient diameter to prevent bending. Design the housing and supports for appropriate rigidity.
- Use care in specifying the roundness, cylindricity, and surface finish of shaft and housing fit surfaces. See Table 8.19.
- Use care in specifying the squareness of the shaft shoulder to the shaft axis and squareness of the housing shoulder to the housing. See Table 8.19.
- Make sure that the radius, ra, of the shaft and housing is smaller than the bearing chamfer dimension, r (minimum) or $r_1$ (minimum) to prevent the shaft or housing from interfering with proper bearing seating. See Fig. 8.7.

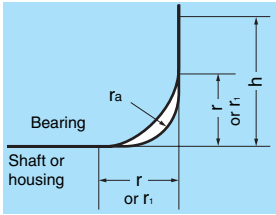


**Fig. 8.7 Chamfer Dimension, fillet radius and Shoulder Height**

**Table 8.19 Shaft and Housing Accuracy and Surface Roughness**

| Item | | Shaft | Housing bore |
|---|---|---|---|
| Roundness | | ≦ 0.5 times shaft diametral deviation | ≦ 0.5 times housing bore deviation |
| Cylindricity | | ≦ 0.5 times shaft diametral deviation within range of bearing width | ≦ 0.5 times bore deviation within range of bearing width |
| Shoulder squarness | small bearing | 3/10000 or less | |
| | medium bearing | 4/10000 or less | |
| | large bearing | 5/10000 or less | |
| Fit surface roughness | small bearing | Ra<0.8μm | Ra<0.8μm |
| | medium bearing | Ra<0.8μm | Ra<0.8μm |
| | large bearing | Ra<1.6μm | Ra<3.2μm |





For radial bearings in general, determine the maximum value of fillet radius ra and the minimum value of the shoulder height according to Table 8.20.

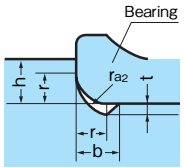


**Fig. 8.8 Chamfer Dimensions and fillet radius**

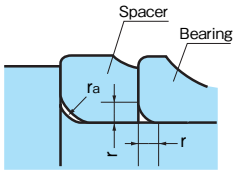


**Fig. 8.9 Chamfer Dimensions and fillet radius when Using a Spacer**

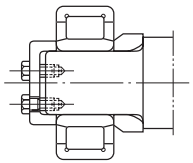

**Fig 8.10**

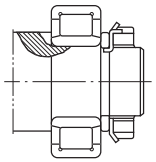

**Fig 8.11**

When using a ground finish, provide and undercut as shown in Fig. 8.8. See Table 8.21 for undercut dimensions.

- When using a fillet radius, ($r_{a2}$) larger than the bearing chamfer dimension (for enhancing the strength of the shaft or when shoulder height must be lower than specified in the dimension tables), install a spacer between the bearing and the shaft shoulder as shown in Fig. 8.9 and Fig. 8.10.
- For ease of dismounting, make the height of the shaft shoulder smaller than the inner ring outside (or land) diameter. If a higher shoulder is required for applying heavy axial load, install an undercut in the shaft as shown in Fig. 8.11.
- Finish bearing mounting screws, or clamping nuts as perpendicular to the shaft as possible and thread screws reverse to the rotating direction of the shaft.
- For split-type housings, carefully finish the matching faces of the split housing and install a relief on both sides of the bore diameter of the cap to prevent excessive force from being applied to the bearing when the housing cap is tightened.
- For light-alloy housings (having less rigidity), insert a steel bushing to provide additional rigidity.
- Generally, an interference fit is not adequate to axially locate a bearing. A shaft or housing backing shoulder should be used.

**Table 8.20 Maximum Corner Radius and Minimum Shoulder Heights**

Unit: mm

| Minimum chamfer dimension r (min) or $r_1$ (min) | Shaft or housing | | |
|---|---|---|---|
| | Radius $r_a$ (max) of corner | Shoulder height h (min) | |
| | | Bearing application in general | Special cases (1) |
| 0.1 | 0.1 | 0.4 | 0.4 |
| 0.15 | 0.15 | 0.6 | 0.6 |
| 0.2 | 0.2 | 0.8 | 0.8 |
| 0.3 | 0.3 | 1.25 | 1 |
| 0.6 | 0.6 | 2.25 | 2 |
| 1 | 1 | 2.75 | 2.5 |
| 1.1 | 1 | 3.5 | 3.25 |
| 1.5 | 1.5 | 4.25 | 4 |
| 2 | 2 | 5 | 4.5 |
| 2.1 | 2 | 6 | 5.5 |
| 2.5 | 2 | 6 | 5.5 |
| 3 | 2.5 | 7 | 6.5 |
| 4 | 3 | 9 | 8 |
| 5 | 4 | 11 | 10 |
| 6 | 5 | 14 | 12 |
| 7.5 | 6 | 18 | 16 |
| 9.5 | 8 | 22 | 20 |
| 12 | 10 | 27 | — |
| 15 | 12 | 32 | — |
| 19 | 15 | — | — |

Note: (1) Data in the columns for special cases should be used when axial load is extremely small. The values in this column do not apply to tapered roller bearings, spherical roller bearings and angular contact ball bearings.
Remark: Symbols are based on Fig. 8.7.

**Table 8.21 Undercut Dimensions for Ground Shaft**

Unit: mm

| Minimum chamfer dimension r (min) or $r_1$ (min) | Undercut dimensions | | |
|---|---|---|---|
| | t | $r_{a2}$ | b |
| 1 | 0.2 | 1.3 | 2 |
| 1.1 | 0.3 | 1.5 | 2.4 |
| 1.5 | 0.4 | 2 | 3.2 |
| 2 | 0.5 | 2.5 | 4 |
| 2.1 | 0.5 | 2.5 | 4 |
| 2.5 | 0.5 | 2.5 | 4 |
| 3 | 0.5 | 3 | 4.7 |
| 4 | 0.5 | 4 | 5.9 |
| 5 | 0.6 | 5 | 7.4 |
| 6 | 0.6 | 6 | 8.6 |
| 7.5 | 0.6 | 7 | 10 |

Remark: Symbols are based on Fig. 8.8.





## 8.3.3 Examples of Shaft Designs

(1) Cylindrical-bore Bearing Shaft Design

- If axial load is applied away from the shaft shoulder, the inner ring can be locked into position using; a) nuts and washers (Fig. 8.12a); b) nuts and lock plates (Fig. 8.12b); or c) end plates and bolts (Fig. 8.12c). When using a lock washer WITHOUT a shaft keyway or slot, it is recommended that the direction of the nut thread be made reverse to that of the shaft rotation.
- When not supporting axial load on the shaft-end on the side opposite the shaft shoulder, you may elect to insert a snap ring in a shaft groove to prevent the inner ring from moving axially. To remove clearance between the snap ring and bearing ring, shims or spacers can be inserted. See Fig. 8.13.
- Snap rings can be applied when using spacers between gears, or pulleys instead of using a shaft shoulder. If axial load will act on the snap ring, insert a shim or spacer between the bearing ring and the snap ring to prevent the bending stress from applying axial load to the snap ring, and to eliminate any axial clearance between the snap ring and the snap ring groove. See Fig. 8.13.

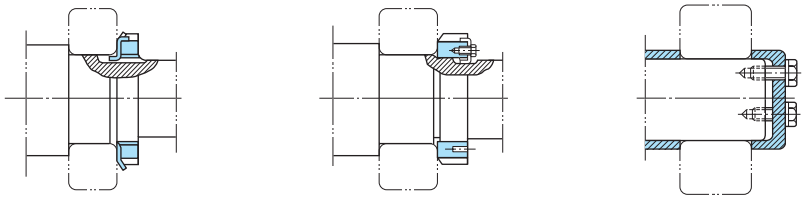

(a) Shaft Nut and Washer (b) Shaft Nut and Lock Plate (c) End Plate and Bolts

**Fig 8.12**

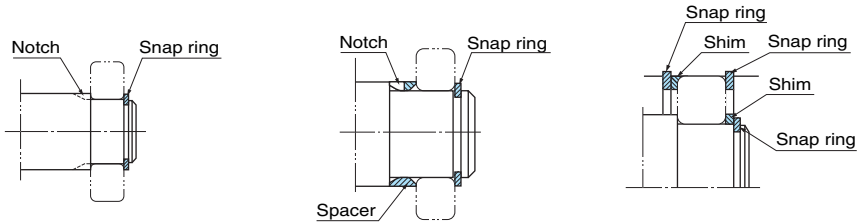


(a) Snap Ring and Notched Shoulder (b) Snap Ring and Notched Spacer (c) Snap Ring and Spacer

**Fig 8.13**

(2) Tapered-bore Bearing Shaft Designs

Two methods of mounting tapered-bore bearings to a shaft are; direct mounting to a tapered shaft, or mounting to a cylindrical shaft using an adapter or withdrawal sleeve.
Use of adapter or withdrawal sleeves may allow use of less expensive shaft seats (no tapering cost), permits use of a larger shaft tolerance and allows variable location of a bearing on a shaft. See Figs. 8.14 to 8.16. Since the dimensional accuracy of sleeves is not as high as that of bearings, sleeves are not appropriate for applications requiring high accuracy or high rotational speed.

- Normally, tapered-bore bearings used with adapters do not employ shaft shoulders. To prevent nuts from loosening, use washers for shafts of diameters 200 mm or less, and lock plates for shafts of diameters 200 mm or more. Thread direction of the nut should be made in reverse to the direction of rotation.
- For shafts with shoulders, mount the tapered-bore bearing with withdrawal sleeves with nuts and washer or end plates and bolts. See Fig. 8.17.
- When accuracy is of primary importance, use the direct mount method using tapered-bore bearings mounted directly on tapered shafts. See Fig. 8.18.

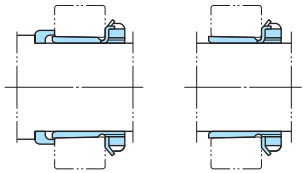

**Fig. 8.14 Adapter Sleeve Mounting**

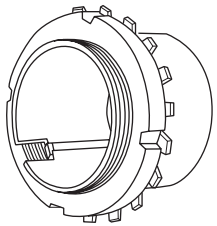

**Fig. 8.15 Adapter Using Washer (Bearing Bore Diameter Number ≦ 40)**

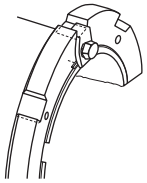

**Fig. 8.16 Adapter Using Lock Plate (Bearing Bore Diameter Number > 40)**

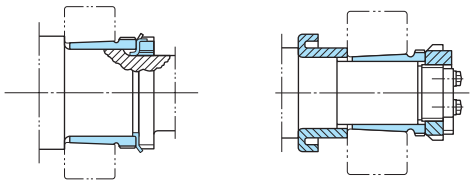

**Fig. 8.17 Withdrawal Sleeve Mounting**

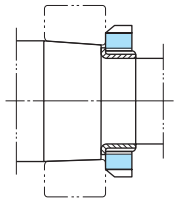

**Fig. 8.18 Tapered Shaft Mounting Using Split Ring, Nut and Washer**





## 8.3.4 Housing Designs

- When mounting two bearings to a common shaft, it is necessary to design a structure that allows linear expansion of the shaft due to temperature rise, and for mounting location errors made during assembly. To accomplish this, mount one of the bearings to support both radial and axial loads. Fix the inner and outer rings to the shaft and housing so that neither ring will move axially. Mount the other bearing so it can move axially as the “free” side bearing capable of supporting only radial load.
  If a bearing configuration is selected for the free side bearing which will not accommodate the linear movement of the shaft created by thermal expansion, select a housing fit which will permit axial movement of the outer ring in the housing.
- If a Cylindrical roller bearing with an N, NU, or RNU configuration is used for the free side bearing, then shaft expansion due to temperature rise can be relieved by axial movement of the inner ring of the bearing. See Fig. 8.19. Use of Cylindrical roller bearings may also facilitate assembly if an interference fit is required for both inner and outer rings (due to the load relationship).

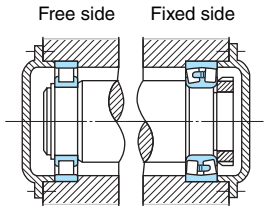


**Fig 8.19**

- If Cylindrical roller bearings with an NF or NJ configuration are used at both ends of a shaft, axial clearance must be prevented from becoming too small. Referring to Fig. 8.20, make width B (inner ring spacer) larger than the distance A between the outer rings.

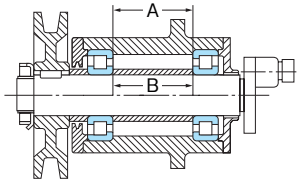


**Fig 8.20**

- If the amount of shaft expansion is small (due to small temperature rise or short shaft), and precise axial location is not needed then two units of non-separable configuration bearings may be used with both units having floating axial movement. In such cases, assemble the two units with axial clearance on both ends of the assembly. See Fig. 8.21. For mounting of two Deep-groove ball bearing pillow blocks with spherical outer ring bearing surfaces, lock and bolt the first pillow block into position, then lock the second block to the shaft. Pull the second block away from the first block while tightening the mounting bolts. Where axial expansion can not be handled by the clearance within the bearings, please consult NACHI.

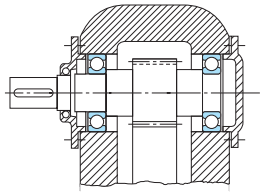

**Fig 8.21**

- Pairs of single-row Angular Contact ball, or Tapered roller bearings are often used for axial positioning. When bearing spacing is large, axial expansion from temperature rise is best handled using an assembly as shown in Fig. 8.22, where the paired bearings take axial and radial loads and another bearing (in the Figure, an NU-configured Cylindrical roller bearing), permits linear shaft expansion.

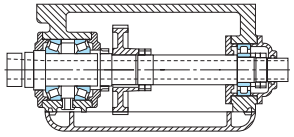


**Fig 8.22**

- When using horizontally-split pillow blocks as the fixed side bearing, the outer ring is located by using one or two positioning rings. When one ring is used, place it to the side of the adapter nut as shown in Fig. 8.23. When two positioning rings are used, place one on each side of the bearing (also see Fig. 8.23). To use a horizontally-split pillow block as the floating side bearing, mount the bearing without positioning rings.

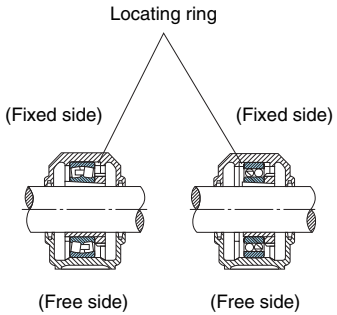


**Fig 8.23**

- Determine the position of the fixed bearing by considering the machinery application and the balance of rated life of the individual bearings. For example, when a bevel gear is used (see Fig. 8.24), set the bevel gear side as the fixed side to maintain the accuracy of the gear engagement. For electric motors, the fixed side bearing is often positioned on the non-driving side where a lower amount of radial load is applied, in order to equalize the bearing equivalent load and rated life between the two bearings.

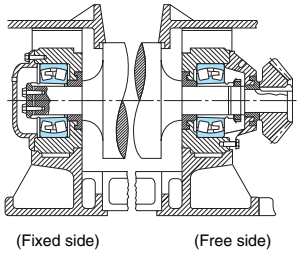


**Fig 8.24**





## 8.4 Sealing Devices

### 8.4.1 Sealing Device Requirements

- Must effectively stop foreign material intrusion.
- Must not create excessive frictional loss or heat.
- Must be easy to mount, dismount, and maintain.
- Must be inexpensive.

The lubrication method and sealing devices used must be compatible and appropriate for the application.
Integrally-sealed or shielded bearings may need separate, additional sealing devices if they are to be operated in an adverse atmosphere.

| Type of Sealing Device | | Design Example | Design Precautions |
|---|---|---|---|
| Linear gap (simple gap type) | 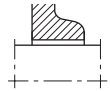 | 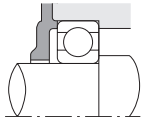 | 1) Clearance between oil groove type shaft and housing Unit: mm<br>Shaft dia. / Radial clearance<br>50 or less: 0.25～0.4<br>50 Over 200 Incl.: 0.5 ～1.5<br>2) Groove dimensions<br>Width: 3 to 5 mm<br>Depth: 4 to 5 mm<br>3) Where possible, provide three grooves or more.<br>4) Fill grooves with grease to aid in sealing out foreign material.<br>5) Threaded groove type is applicable to oil lubricated applications where the shaft is horizontal and operates in constant rotational direction. Thread grooves must be reverse to the rotation direction. Therefore, they are not applicable for shafts with indeterminate direction rotation.<br>6) Oil grooves are used alone if there is little foreign material, as a simple method to prevent oil leaks, usually they are combined with another method of sealing. |
| Coaxial groove (oil groove type) | 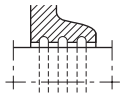 | 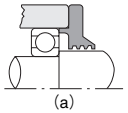 (a)<br> 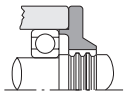 (b)<br> 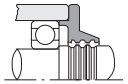 (c) | |
| Threaded groove | 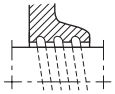 | 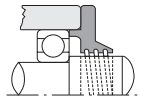 <br> 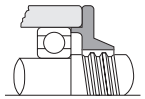 | |

| Type of Sealing Device | | Design Example | Design Precautions |
|---|---|---|---|
| Slinger type | 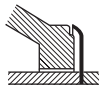 | 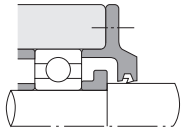 (a) 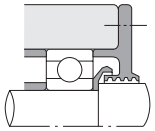 (b) 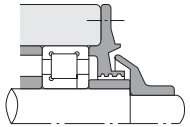 (c) 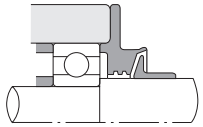 (d) | 1) Seal types that sling oil, prevent oil leakage and dust entry through the centrifugal force generated by a rotor attached to the shaft.<br>2) (a) and (b) are good for preventing oil leakage.<br>3) (c) and (d) are good for preventing dust and water intrusion. |
| Oil thrower type (for oil lubrication) | 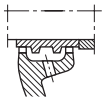 | 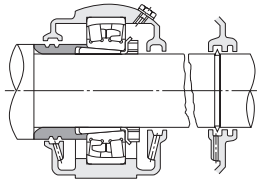 Oil thrower (a type of slinger) 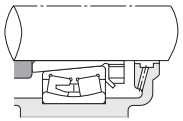 | 1) Oil deposited in the grooves returns to the housing. |





| Type of Sealing Device | | Design Example | Design Precautions |
|---|---|---|---|
| Radial labyrinth type | | 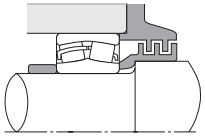 | 1) Labyrinth Clearance Unit: mm |
| Axial labyrinth type | 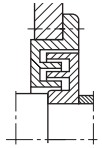 | 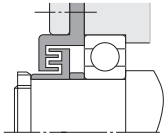 | |
| Self-aligning type labyrinth | | 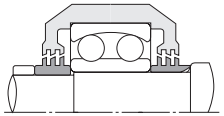 | |

| Shaft dia. | Labyrinth Clearance | |
|---|---|---|
| | Radial direction | Axial direction |
| 50 or less | 0.25～0.4 | 1～2 |
| 50 Over 200 Incl. | 0.5 ～1.5 | 2～5 |

2) There are radial labyrinth and axial labyrinth types of labyrinth seals. The radial labyrinth type requires a split housing.

3) These seals are very suitable for the prevention of oil leakage of high speed shafts.

4) For low speed rotation, apply grease to the grooves for better sealing.

5) If angular misalignment exists between the shaft and the housing, use self-aligning type labyrinth.

| Type of Sealing Device | | Design Example | Design Precautions |
|---|---|---|---|
| Seal ring type, (felt, leather, rubber, plastic) | | 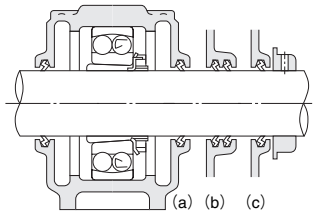 (a) (b) (c) | |
| Adjustable Seal type (includes metal packing, O-ring, etc.) | | | |

1) Sealing Material Temperature Range

| Sealing material | Operating temperature range (˚C) |
|---|---|
| Nitrile | −25～100 |
| Acrylic | −15～130 |
| Silicon | −70～200 |
| Flourine | −30～200 |
| Ethylene tetrafluoride | −50～220 |
| Felt | −40～120 |

2) Sealing Material Speed Limits m/s

| Shaft diameter (mm) | ～20 | 20～40 | 40～ |
|---|---|---|---|
| Nitrile | 4～ 8 | 8～12 | 12～16 |
| Acrylic | 4～12 | 12～18 | 18～25 |
| Silicon | 4～18 | 18～25 | 25～32 |
| Flourine | 4～18 | 18～25 | 25～32 |
| Ethylene tetrafluoride | 15 | | |
| Felt | 3.5～4.5 | | |

These values apply when shafts have good surface finish, roundness, and run-out.

3) Lubricate the sliding surfaces of seal and shaft.

4) These seal types are mainly applicable to grease lubricated bearings.

5) Install one to three pieces of felt ring.

6) For felt rings in high speed applications, use hard seal material. Coat with mineral oil before mounting and insert tightly.

7) Felt will harden and lose elasticity under high temperature or speed.

8) Felt rings can prevent intrusion of small amounts of dust, for other applications it should be combined with a slinger or a synthetic rubber grease stopper that is the same size as the felt ring.





| Type of Sealing Device | | Design Example | Design Precautions |
|---|---|---|---|
| Oil seal type | 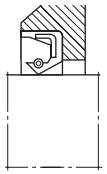 | 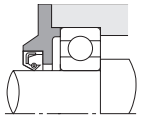 (a) | |
| | 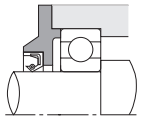 | (b) | |
| | 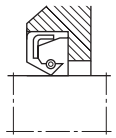 | 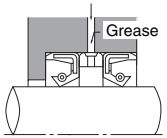  | |
| | 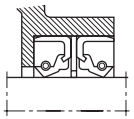 | 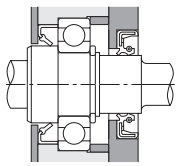 Oil seal example (1) 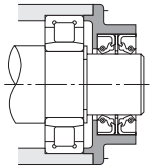 Oil seal example (2) | |

1) Speed and shaft surface roughness

| Speed (m/s) | Surface Finish | Finish method |
|---|---|---|
| ～ 5 | Ra<0.8μm | Paper finish after grinding |
| 5～10 | Ra<0.4μm | Paper finish after grinding |
| 10～ | Ra<0.2μm | Lapping, or superfinishing, or electro polishing after quenching and grinding |

2) Sliding section of shaft should be minimum hardness of HRC40, if possible hardness of HRC55 or higher is desirable.

3) Dimensional tolerance of sliding section of shaft is h9, for seal housing it is H8 or H7.

4) Since there are various shapes and materials for seals, select those that meet your purposes.

5) Control the shaft and seal eccentricity, particularly eccentric movement of the shaft.
Shaft eccentricity of 0.02 to 0.05 or less is desirable.

6) Lubricate the sliding surfaces of seal and shaft.

# 8.5 Lubrication

## 8.5.1 Functions of Lubrication

The main purpose of lubricants in rolling contact bearings is to reduce friction and wear of each element. Lubricants perform this function by separating rolling and sliding surfaces with a very thin film of oil. Bearing performance and service life is largely dependent on the suitability of the lubricating system and lubricant to the application. Functions of lubrication in rolling contact bearings are:

① Lubrication of friction surfaces:
Reduction in;
1) Rolling friction between the rolling elements and raceways.
2) Sliding friction between roller end and guide faces of roller bearings.
3) Sliding friction between the rolling elements and retainer.
4) Sliding friction between the retainer and raceway guide surface.

② Removal of the heat from system produced by friction and external sources. An example of the heat removal function would be use of a circulating oil lubrication system for a high-speed application.

③ Dust-proofing and rust prevention:
1) Prevention of foreign material from entering the bearing.
2) Protection of bearing components from corrosion.

④ Relief of stress concentration:
1) Uniform distribution of stress to the rolling contact surface.
2) Relief of impact loads.

## 8.5.2 Lubrication Cautions

① Adequate lubricant film separation should be maintained between friction surfaces.

② Since the oil film required on contact surfaces is thermally feeble, adequate oil viscosity must be maintained.

③ Since lubricants tend to deteriorate with increase in temperature, bearing applications should be designed to keep the operating temperature as low as possible.

④ The lubricating system (method) must be suitable for the application and the lubricant must have appropriate properties.

⑤ The lubricant must be kept free from contamination and water.





## 8.5.3 Lubricating Methods

(1) Oil Lubrication

(1.1) Oil Bath Lubrication

- Oil bath lubrication is generally used for low-to-medium-speed operation.
- Excessive oil causes churning which can cause excessive temperature rise. Insufficient oil will probably lead to early bearing failure.
- Oil level gauges are recommended to check (and maintain) the proper oil level.
- Separation ribs may be installed at the bottom of the housing to reduce churning and or to dissipate heat.
- Static oil level should be at slightly below the center of the lowest rolling element of a bearing applied to a horizontal shaft. See Fig. 8.25. For vertical shafts, static oil level should cover 50% to 80% of the rolling element.
- When two or more bearings are used on a vertical shaft in the same housing, the lower bearing may create excessive temperature rise if an oil bath system is used (unless operated at very low speed). If excessive heat occurs, use a drip, splash, or circulating oil system.

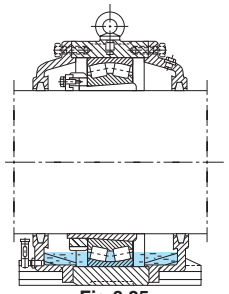

Fig 8.25

(1.2) Splash Lubrication

- In splash lubrication, oil is splashed on the bearing by a rotating element (an impeller or “slinger”) mounted on the shaft. The bearing is not immersed in the oil.
- In a gear box, the gears and bearings are often lubricated from a common oil reservoir with the gears serving as a slinger. Since oil viscosity for the gears may differ from that required for the bearings and the oil may contain particles worn from the gears, a separate lubrication system or method may improve bearing life. Sealed or shielded bearings and “magnetic” plugs are often used in conjunction with gear drives.
- A bearing on a vertical shaft can be provided with a conical rotary element under the bearing so that the oil rises on the conical surface and is atomized before entering the bearing. See Fig. 8.26.

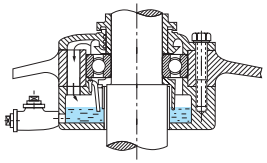

Fig 8.26

(1.3) Drip Lubrication

- Drip lubrication is used for bearings operated at relatively high speeds under low-to-medium loads.
- Drip lubrication is generally used for the radial bearing on a vertical or inclined shaft and oil is fed directly to the bearing.
- The lubricating oil is contained in a lubricator, and is fed to the bearing through a wick which also serves as a filter. A sight window is provided to allow checking the oil level.

Fig. 8.27 shows a drip lubricating system provided with a lubricator on top of the housing. Oil is dripped onto the shaft nut in the bearing box, and is atomized before entering the bearing.

Fig. 8.28 shows an oil metering system designed to feed several oil drops per minute to the bearing.

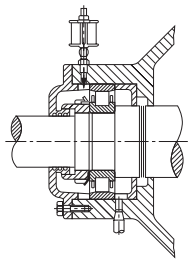

**Fig 8.27**

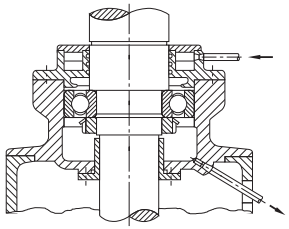

**Fig 8.28**

(1.4) Circulating Oil Lubrication

- Circulating oil lubrication has two purposes:
  1) To cool the bearing.
  2) To automatically feed oil to a specific area from a central system.
- A circulating oil system consists of an oil pump, cooling device, filter and delivery piping. Circulating oil systems utilize the pumping action of the bearings and augment the cooling effects of slingers.
- Circulating oil lubrication includes: drip, forced, and spray-mist lubrication.
- In a circulating oil lubricating system, the bearing is provided with an oil inlet located on one side of the bearing, and an oil outlet on the other side of the bearing.
- The oil outlet should be larger than the oil inlet so that excess oil does not remain in the bearing housing.

Fig. 8.29 shows a circulating system with an oil passage in the area of the housing which carries no load. This system is for steam-heated calender rolls in a paper mill. Cooled oil is circulated through the inner wall of the housing and passes through both bearings.

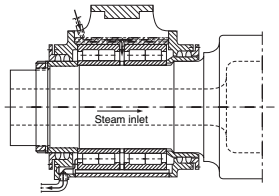


**Fig 8.29**





(1.5) Forced Lubrication

Forced lubrication is used to feed oil under pressure to overcome internal housing pressure in high-speed operation.

- The oil outlet should have a cross section twice that of the oil inlet.
- A “jet” lube system is sometimes used in high-speed applications to target oil directly to the rolling and sliding components of the bearing. See Fig. 8.30. Excessive oil should be discharged with a pump.

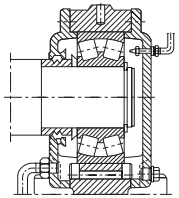

**Fig 8.30**

(1.6) Disk Lubrication

Disk lubrication utilizes a disk on the shaft which rotates at high speed. The disk is partially submerged in oil, and splashes oil to an upper oil sump, which in turn delivers the oil to the bearing by gravity. Disk lubrication is used on the bearings of superchargers and blowers. See Fig. 8.31.

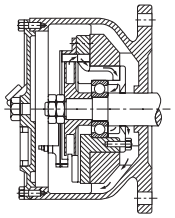

**Fig 8.31**

(1.7) Spray Mist Lubrication

- Fig. 8.32 shows an example of spray lubrication, which uses a turbo-compressor impeller to force oil into the bearing.
- Fig. 8.33 shows an example of oil mist applied to an oil atomizer (0.5 to 5.0 cc/h).

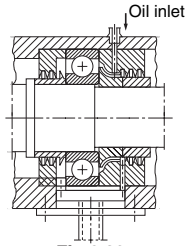


**Fig 8.32**

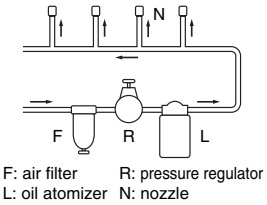


**Fig 8.33**

(1.8) Oil/Air Lubrication

Using the oil/air lubrication, a very small amount of oil is mixed with compressed air with a constant-quantity piston and mixing valve. This mixture is directed to the rolling part of bearings.

Because oil/air lubrication can reduce heat generation from bearings, this method is suited for high speed applications such as machine tools.

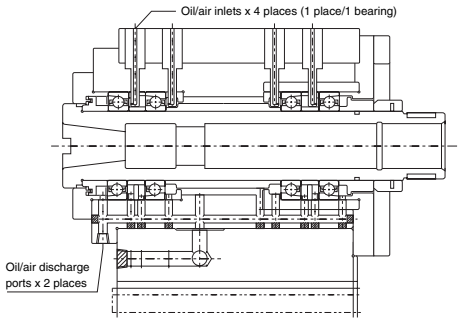


**Fig 8.34**

(2) Grease Lubrication

In using grease lubrication, the following items should be considered:

- Select grease having correct properties.
- Grease must be delivered in the right amount to the correct bearing area.
- Determine method of relubrication. Different greases should not be mixed because it can cause poor lubrication performance.
- Consider centralized lubrication for large-size machinery such as rolling mill equipment. See Fig. 8.35.1.

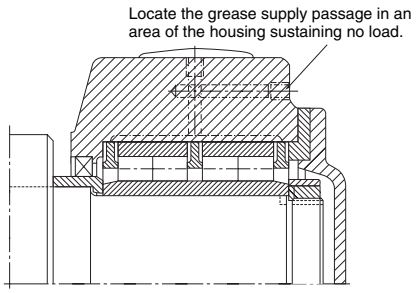


**Fig. 8.35.1**

Fig. 8.35.2 shows a design utilizing a grease supply plate.

## 8.5.4 Lubricants

Rolling contact bearings use two forms of lubricants; lubricating oil and grease. In some special applications, solid lubricants such as molybdenum-disulfide, graphite, or PTFE are used. The lubricant should have the following properties:

- Low impurity and moisture content
- Temperature stability
- Non-corrosiveness
- Load pressure resistance
- Anti-wear action
- Anti-friction action
- High mechanical stability

See Tables 8.22 for a guide to selection of lubricating oil and grease.

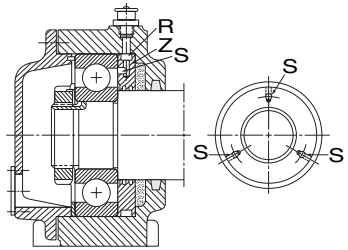


S: nozzle
R: oil groove
Z: grease sector

**Fig. 8.35.2**

**Table 8.22 Guide to Selecting Oil and Grease**

| Application conditions | Grease (1) | Oil |
|---|---|---|
| Temperature | Not suitable for high temperature (100˚ to 120˚C) | Suitable for high temperature (with circulating cooling) |
| Speed | Low to medium speeds | Suitable for high speed operation (depending on lubrication method) |
| Load | Light to medium loads | Suitable for high loads |
| Housing design<br>Maintenance | Simple | Complicated, need to consider prevention of oil leaks |
| Centralized lubrication | Possible | Easy |
| Dust filtration | Not possible | Possible (Circulating lubrication provides a filter to trap dust) |
| Rolling resistance | Large | Small (Correct oil quantity must be maintained) |

Note: (1) Grease for regular rolling contact bearings.





A wide variety of lubricating oils and greases are commercially available for rolling contact bearings. It is important to select oils or greases with base oils having an appropriate viscosity for the operating condition.

Table 8.23.1 and 8.23.2 give generally recommended viscosities for bearings under normal operating conditions.

(1) Lubricating Oil

Oils with a viscosity too low for the application may allow a partial loss of raceway to rolling element separation, leading to early bearing failure. Oils with too high a viscosity will cause an increase in torque, resulting in power loss and abnormal temperature rise. In general, as the load increases, increase the oil viscosity. As speed of rotation increases, decrease the oil viscosity.

For Extra-small or Miniature ball bearings, low-viscosity lubricating oil will often be selected for low-torque requirements.

Table 8.23.2, and Fig. 8.36 on following pages can be used to aid in selection of appropriate oil viscosity.

**Table 8.23.1 Bearing Types and Proper Viscosity of Lubricating Oils**

| Bearing type | Viscosity at operating temperature |
|---|---|
| Ball bearing, cylindrical roller bearing | Over 13 mm²/s |
| Tapered roller bearing, spherical roller bearing | Over 20 mm²/s |
| Spherical Roller Thrust Bearings | Over 32 mm²/s |

Remark: 1 mm²/s = 1cSt (centistokes)

**Table 8.23.2 General Oil Selection Guide**

| Bearing operating temperature (˚C) | dn value | ISO viscosity grade (VG) of lubricating oil (at 40˚C) | | Applicable Bearing |
|---|---|---|---|---|
| | | Normal load | Heavy or impact load | |
| -30～0 | Up to speed limit | 22 32 | 46 | All |
| 0～ 60 | Up to 15000 | 46 68 | 100 | All |
| | 15000～80000 | 32 46 | 68 | All |
| | 80000～150000 | 22 32 | 32 | Except thrust ball bearings |
| | 150000～500000 | 10 | 22 32 | Single row radial ball bearings<br>Cylindrical Roller Bearings |
| 60～100 | Up to 15000 | 150 | 220 | All |
| | 15000～80000 | 100 | 150 | All |
| | 80000～150000 | 68 | 100 150 | Except thrust ball bearings |
| | 150000～500000 | 32 46 | 68 | Single row radial ball bearings<br>Cylindrical Roller Bearings |
| 100～150 | Up to speed limit | 320 | | All |
| 0～ 60 | Up to speed limit | 46 68 | | Spherical Roller Bearings |
| 60～100 | Up to speed limit | 150 | | |

Remarks: 1. This table is a guide to oil selection based on JIS K 2001 classification of Industrial Lubricating Oil Viscosity.
2. Generally as load increases or speed decreases oil with a higher viscosity is used.
3. This table is a guide for oil bath lubrication and circulating oil lubrication.
4. For information on operating conditions beyond those of this table, contact NACHI.

**Fig. 8.36 Viscosity-Temperature Line Diagram**

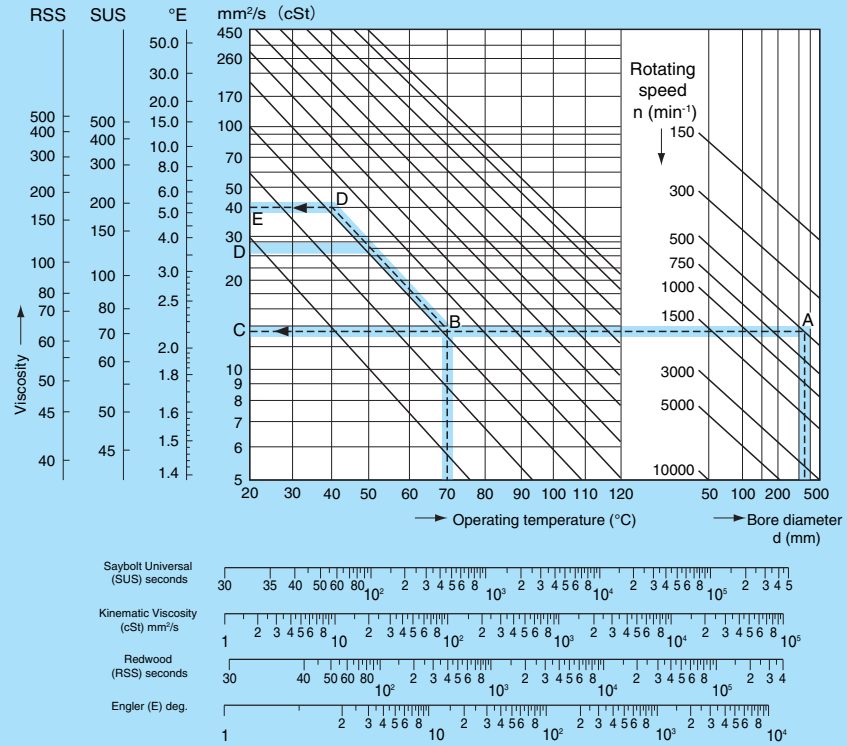


Example: Bearing Type : Cylindrical roller bearing
Bearing bore : 340 mm
Rotating speed : 500min$^{-1}$
Operating temp : 70°C
Required viscosity during operation (70°C) is determined by finding the intersection at A of rotating speed (500 min$^{-1}$) and bore (340 mm), then following a horizontal line from A to C for 13 mm²/s.
Then find the intersection B of a straight line AC from 40°C, base temperature specified by ISO Viscosity Grade (VG), to 70°C, then draw a slanted line passing through B parallel to the viscosity operating temperature graph, find the point where the line intersects the 40°C line, for a viscosity value of 40 mm²/s.
As a result, VG46, which satisfies a minimum 40 mm²/s, should be selected.





(2) Lubricating Grease
Lubricating grease is composed of a base oil, a thickener, and additives.

● Base Oil
Base oil refers to the liquid lubricant carried by a thickener. Mineral oils are widely used as the base oils for grease. Synthetic oils such as diester or silicone oil are also used for improving the heat resistance and stability of grease. In general, grease with a low-viscosity base oil is suitable for low temperatures and or low loads, while grease with a high viscosity base oil is suitable for high temperatures and or high loads.
Since lubricating performance is dependent on the thickener, additives, and viscosity, these components must be carefully selected to meet operating conditions.

● Thickener
The thickener has a sponge-like structure composed of a loose combination of fine fibers or particles. Thickeners are roughly divided into metal soap, and non-soap types as shown below.
Sodium (Na) soap grease may react with water to form an emulsion, and should not be used for bearings operating in a high-moisture environment.

- THICKNER
  - Metal: Ca, Li, Na
  - Non-soap
    - Heat resistant organic base: Polyurea & Fluorides
    - Inorganic base: Silica gel and organic bentonite

● Additives
An additive is an agent that imparts performance enhancing properties to a grease, such as extreme pressure, rust resistance, anti-oxidation performance, or other properties.

Anti-oxidant additives protect grease from oxidation and deterioration under thermal influence over a long period. Extreme pressure additives improve load resistance and impact resistance. Rust preventive additives protect the bearing and other surrounding components against rusting.

● Penetration
Penetration is a measure which indicates the solidity of grease. A measurment device has a cone with a specified weight and shape. The cone is penetrated into the sample grease for a specified time. Penetration is the depth to which the cone penetrates (in units of 1/10 mm).

**Table 8.24 Grease Number and Penetration**

| NLGI No. | Penetration (ASTM Worked) |
|---|---|
| 0 | 355～385 |
| 1 | 310～340 |
| 2 | 265～295 |
| 3 | 220～250 |
| 4 | 175～205 |
| 5 | 130～160 |
| 6 | 85～115 |

● Dropping Point
Dropping point is the temperature at which a grease sample drops through a specified hole size after being heated and fluidized.

(3) Lubrication Amount
① Oil
When oil bath lubrication is being used and a bearing is mounted with its axis horizontal, oil should be added until the static oil level is at the center of the lowest bearing rolling element. For vertical shafts, add oil to cover 50% to 80% of the rolling element.

② Grease

The rolling bearing and bearing housing should be filled until the grease occupies about 33 to 50 % of the respective volumes. Temperatures will tend to rise as speed increases (due to churning). Higher-speed operation will be more sensitive to excess grease fill, so it follows that at higher dmn values, the grease-fill quantity must be reduced.

a) Amount of Initial Grease Fill

The amount of initial grease-fill required is calculated from the following equations:

Ball bearing:

$$Q = \frac{d^{2.5}}{900} \quad \cdots\cdots \quad (8.18)$$

Roller bearing:

$$Q = \frac{d^{2.5}}{350} \quad \cdots\cdots \quad (8.19)$$

where:

Q=Amount of filling grease (g)
(specific gravity of grease=0.9)
d=Bore diameter of bearing (mm)

b) Relubrication Amount Added at Service

$$Q = 0.005 \times D \cdot B \quad \cdots\cdots \quad (8.20)$$

where:

Q=Amount of grease to add (g)
(specific gravity of grease=0.9)
D=Outside diameter of bearing (mm)
B=Inner ring width (mm)

③ Lubrication Interval

For a typical bearing, which operates at about 50˚C, lubricant should be replaced once a year. If operating temperature is 100˚C or more, the lubricant should be replaced more than once every three months even if it has good heat stability.

If oil bath lubricant becomes contaminated by water or foreign particles, it must be replaced immediately.

The grease relubrication interval can be estimated from Fig 8.37.

④ Grease Service Life

For applications where relubrication is not possible or practical, grease service life may be estimated using Formula (8.21).

The following formula was derived using a grease with Lithium thickener and mineral oil base.

$$\log L = (0.018f - 0.025)T - 2.77f + 6.3 \quad \cdots\cdots \quad (8.21)$$

where:

L=Grease life (h)
f=(Operating speed) ($min^{-1}$)/
(Bearing grease speed limit) ($min^{-1}$)
If f is less than 0.25, f is set=0.25
T=Operating temperature (˚C)
If T is less than 30˚C, T is set=30.





**Fig 8.37 Grease lubrication interval**

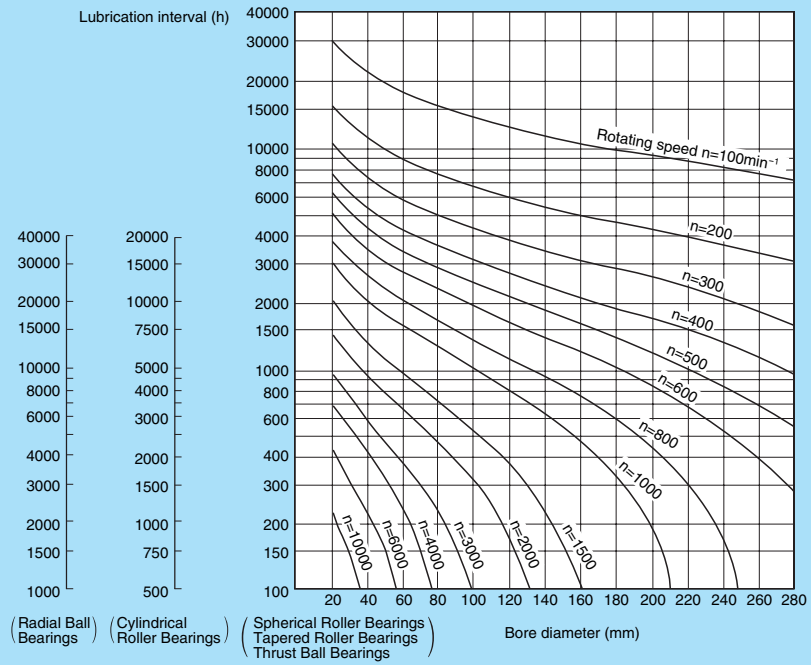

**Table 8.25 Grease Properties**

| Popular name | Cup Grease | Fiber Grease | Aluminum Grease | General-purpose Grease | Diester Grease | Silicone Grease | Mixed Base Grease | Complex Grease | Non-Soap Base Grease | |
|---|---|---|---|---|---|---|---|---|---|---|
| Thickener | Ca Soap | Na Soap | Al Soap | Li Soap | | | Ca + Na Soap, etc. | Li Complex Soap, etc. | Bentonite, Urea, Fluorine, etc. | |
| Base Oil / Properties | Mineral Oil | Mineral Oil | Mineral Oil | Mineral Oil | Diester Oil | Silicone Oil | Mineral Oil | Mineral Oil | Mineral Oil | Synthetic Oil |
| Visual appearance | Like butter | Fibrous or like butter | Stringy or like butter | Like butter | Fibrous or like butter | | Like butter | Fibrous or like butter | Like butter | |
| Dropping point (˚C) | 85 | 160 or higher | 85 | 170 or higher | | 200 or higher | 150 or higher | 200 or higher | 250 or higher | |
| Operating temperature range (˚C) | -20～+70 | -10～+120 | -10～+80 | -30～+120 | -50～+130 | -50～+170 | -30～+120 | -30～+140 | -10～+130 | -50～+200 |
| Water Resistance | Good | Not possible (emulsification) | Good | Good | | | Not possible (for Na) | Good | Good | |
| Mechanical Stability | Fair | Good | Fair | Good | | | Good | Good | Good | |
| Remarks | Contains small amount of moisture for structure stability. Not suitable for use at high temperature. | Cannot be used with water or moisture due to emulsification with water. Used at relatively high temperature. | Used in vibrating conditions due to good tackiness. | General purpose grease. Widely used with small and medium size ball bearings. | Suitable for low temperature operation. | Wide working temperature range. Mainly used for light load conditions. | Used for large size bearings. | Suitable for high temperature operation and heavy load conditions. | Wide working temperature range. Depending on combination of thickener and base oil used, good high temperature, low temperature or chemical stability can be obtained. | |

Remarks: 1. Greases with sodium (Na) soap thickener can not be used in applications where there is a risk of water or high humidity because they emulsify and flow out if they mix with water.
2. In case of mixing different brands of grease (not recommended), please consult the grease manufacturer to determine if there are any detrimental effects.
3. In case operating temperatures are beyond what are shown in the table, please consult NACHI.





## 8.6 Speed Limit

- Bearings exceeding a certain operating speed will begin to create internal heat which may not be controllable.
- Speed limits vary with bearing types, dimensions, lubrication system, internal design of the bearing, and working loads. In addition, speed limits will vary according to the type of integral bearing seal which may be used (dependent on the speed of the seal contact area).
- The term “speed limit” refers to the estimated speed, in revolutions per minute, at which bearings will remain serviceable.

The dimension tables show speed limits for both grease and oil lubrication. Please note that the published speed limits are based on operation of properly lubricated, lightly-loaded bearings, installed on a horizontal shaft.

### 8.6.1 Speed Limit Correction for Load

As noted above, bearing speed limits will vary with respect to load. Figs. 8.38.1 and 8.38.2 allow calculation of a speed limit correction factor which is applied to the speed limit tables.

- In Fig. 8.38.1, Cr is the basic dynamic load rating and P is the equivalent dynamic load. If Cr/P is < 13, then the table speed limit is multiplied by the correction factor from the curve shown in Fig. 8.38.1.
- In addition, if the ratio of the axial load (Fa) to the radial load (Fr) is larger than 0.3, that is, if Fa/Fr > 0.3, then the speed limit must be FURTHER multiplied by a correction factor as shown in Fig. 8.38.2
- Where the bearing is used at 75% or more of the speed limit, lubrication becomes a more sensitive operating consideration. If grease is to be used, then selection of the correct

**Fig. 8.38.1 Correction Factor for Bearing Load**

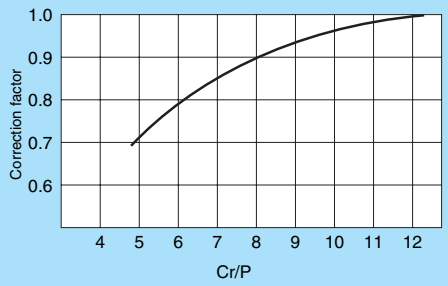


Cr : Basic dynamic load rating (N)
P : Dynamic equivalent load (N)

**Fig. 8.38.2 Correction Factor for Fa/Fr**

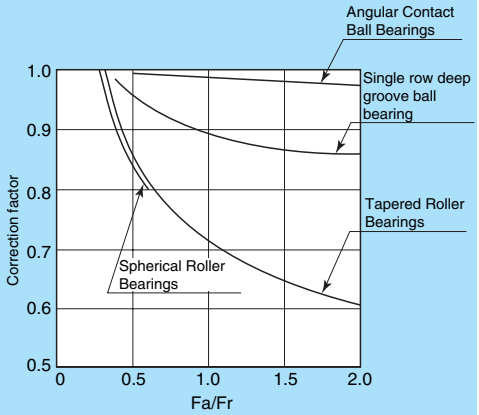


Fa : Axial load (N)
Fr : Radial load (N)

type and amount of grease is of paramount importance. If oil is used, then the correct selection of the feeding method and rate, and oil specification is of extreme importance.

- Please contact NACHI for help in cases where application rotating speed exceeds the corrected bearing speed limit.
- If the bearing is used in excess of the corrected speed limit, consideration must be given to the accuracy and clearance of the bearing; and to the material and shape of the retainer. Table 8.26 provides a guideline for maximum speed for bearings using special cages and internal design.

**Table 8.26 Correction of Allowable Speed Limit in High-speed Operation**

| Bearing Type | Correction factor |
|---|---|
| Deep Groove Ball Bearings | 2.5 |
| Angular Contact Ball Bearings | 2 |
| Cylindrical Roller Bearings (single row) | 2.5 |
| Tapered Roller Bearings | 2 |
| Spherical Roller Bearings | 1.5 |





# 8.7 Friction and Temperature Rise

## 8.7.1 Friction Torque

Friction torque in rolling bearings will vary with the bearing load and the condition of the lubricant.

Where the bearing load is light-to-normal ($P \leqq 0.12C$) and the lubricant provides good separation between the rolling contact surfaces, bearing friction torque may be calculated using the following formula:

$$M = \mu \cdot F \cdot \frac{d}{2} \quad \cdots\cdots \quad (8.22)$$

where:

M : friction torque (N·mm)
μ : coefficient of friction
F : bearing load (N)
d : shaft diameter (mm)

The coefficient of friction for various bearing types is shown in Table 8.27.

## 8.7.2 Temperature Rise

- Temperature rise in bearings is caused by the conversion of friction energy into heat.
- Bearing temperature will generally rise quite abruptly during the initial stage of operation and then gradually climb until a steady state is reached. The steady state condition will exist if temperature rise from frictional energy is removed by the cooling "heat-sink" effect from the shaft and housing, and from heat conductance via the shaft, housing and lubricant.
- The time until equilibrium is attained depends on the difference between heating volume generated by the bearing and the heating volume removed by the cooling effect.
- If the equilibrium temperature is excessively high, then review of the bearing application should be done. The bearing internal clearance or preload, fits, bearing support structure, seal contact area surface finish, rotating speed, load, and lubrication type, amount, and delivery system are subjects for investigation where excessive temperature occurs.
- An abnormal temperature rise can cause a spiraling condition where no equilibrium will occur, thus leading to a break-down in the lubricant and lubricant film, with catastrophic results.

**Table 8.27 Coefficient of Friction**

| Bearing Types | Coefficient of friction (μ) | Load conditions |
|---|---|---|
| Single row Deep-groove Ball Bearings | 0.0010～0.0015 | Radial load |
| Single row Angular Contact Ball Bearings | 0.0012～0.0018 | Radial load |
| Cylindrical Roller Bearings | 0.0008～0.0012 | Radial load |
| Tapered Roller Bearings | 0.0018～0.0025 | Radial load |
| Self-Aligning Ball Bearings | 0.0008～0.0012 | Radial load |
| Spherical Roller Bearings | 0.0020～0.0025 | Radial load |
| Thrust Ball Bearings | 0.0010～0.0015 | Axial load |
| Spherical Roller Thrust Bearings | 0.0020～0.0025 | Axial load |

# 8.8 Mounting and Dismounting

Rolling bearings have higher accuracy than other parts in most equipment and are often considered to be the most important rotating component. Improper handling of bearings reduces machine accuracy and can cause early bearing failures. To attain predicted bearing performance, utmost care should be taken in handling bearings from the point-of-receipt through the mounting operation.

## 8.8.1 Storage and Handling

The major problems encountered during bearing storage and handling operations are in rusting and impact damage to the parts.

- To protect bearings against rusting during storage, parts should be placed in a dry, clean, cool area. Bearings should not be subjected to extremes of humidity during storage.
- Impact to bearings can create damage to the raceways, rolling elements, and cages. Do not drop bearings. Bearings which are dropped should not be used for service.

## 8.8.2 Mounting

Proper bearing mounting governs the life, accuracy, and performance of a bearing. Before mounting the bearing, carefully check the following points.

Check to see if:

- the job standards are established and the necessary jigs are prepared.
- the shaft and housing size, tolerance, and finish are defined and met.
- lubricant type and amount specified is at hand.
- inspection standards are established.
- the method of cleaning the bearing and relevant parts is defined and understood.

(1) Mounting Precautions

- Select a clean, dry place to handle the bearing, and keep necessary tools and workbench clean.
- Do not unpack the bearing until it is to be mounted.
- If the bearing is unpacked before mounting for acceptance inspection or for any other reason, follow these directions:
  a) If the bearing is to be mounted within a short time period, coat it with rust preventive oil and place it in a clean container.
  b) If the bearing will not be mounted in a short time, coat it with rust preventative oil and repack it in the original container.
- Check to see that the lubricant drums, cans, tubes, or applicators are clean and or closed. Check to be sure that the bearing housing is clean and free from flaws, impressions, burrs, or any other defects.
- For grease lubrication, you may fill the new bearing with grease without cleaning the bearing. If the bearing is small or is used for high-speed operation, whether it is lubricated with oil or grease, wash the bearing with clean kerosene or warm, light oil to remove the rust preventative. However bearings with seals or shields must not be washed and heated.
  If gear oil is used for lubrication, clean the bearing to remove any rust preventive oil.

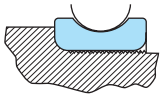

**Fit surface roughness**
**Fig 8.39**

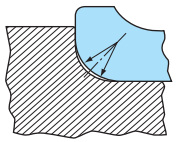

**Corner radius of shaft (good)**
**Fig 8.40**

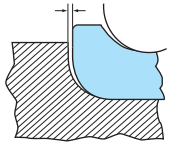

**Corner radius of shaft (poor)**
**Fig 8.41**





(2) Shaft

- Before mounting the bearing on the shaft, check to see that the shaft is finished to the specified size and accuracy.
- Check the shaft for surface finish. If the shaft fit surface has a poor surface finish (see Fig. 8.39), the surface may be smoothed during mounting, possibly resulting in bearing ring creep, shaft wear, and early bearing failure.
- Be sure that the shaft shoulders are finished perpendicular to the shaft axis, otherwise the bearing will be misaligned resulting in early bearing failure.
- Finish the corner radius of the shaft to the specified dimensions. Make sure the corner radius of the shaft is slightly smaller than that of the bearing as shown in Fig. 8.40. Never have the corner radius of the shaft larger than that of the bearing (see Fig. 8.41), otherwise, the bearing ring may be misaligned and early bearing failure will occur.
- Out-of-roundness of shaft
  Make sure that the shaft is accurate to out-of-roundness and cylindricity specifications. The inner ring of the bearing is an elastic body, having a relatively thin wall, so if the inner ring is fitted to a shaft having poor roundness, the inner ring raceway will be deformed accordingly.
- Contact surface of oil seals
  When using an oil seal, finish the seal contact surface to Ra < 0.8 μm. If the finish is rougher than Ra < 0.8 μm, the seal will gradually wear until it has no sealing effect. Also make sure that the contact surface is within the runout tolerance, otherwise oil leaks may occur since the seal lip may not stay in contact with the rotating shaft. (See Page 113).

(3) Bearing Housing

- Purposes of the bearing housing are:
  a) to maintain the bearing position for load support.
  b) to protect the bearing from the intrusion of foreign material.
  c) to provide a structure that will keep the bearing well lubricated.
- Verify that the housing bore diameter is to design specifications. If a loose fit class of H or looser is specified, check to make certain that the bearing will move freely in the bearing housing during installation. On horizontally-split bearing housings such as used on pillow blocks, do not mix the caps and bases during a reassembly procedure since these parts are mated during manufacture. In the latter case, mixing may cause either pinching or looseness of the bearing.
- Allowance must be made for linear expansion of the shaft due to temperature rise. When two or more bearings are mounted on a single shaft, comply with the following directions:
  Fix one bearing in the axial direction in the housing, and make sure that the other bearing(s) are free to move in an axial direction.

(4) Accessory Mounting Parts

Prior to bearing mounting, gather a set of the parts required for the mounting job. These accessory parts may include washers, adapters, withdrawal sleeves, spacer rings, slingers, oil seals, O-rings, shaft nuts, and snap rings for the shaft and or housing bore. Thoroughly clean these accessory parts and check them for appearance and size.

Other Precautions

- Be sure that the side of the shaft nut is perpendicular to the thread, otherwise, when tightened, the side of the shaft nut will make uneven contact with the side of the bearing causing early bearing failure. Use particular care when the bearing is used for high-accuracy applications such as machine tools.
- Check washers and spacer rings for parallelism of both sides.
- The oil seal and O-ring may create a temperature rise because the contact force is too great or because they are initially dry. Apply oil or grease to the contact surfaces to help prevent premature wear and reduce torque.

### 8.8.3 Bearing Mounting Considerations

When pressing a bearing into position, press against the ring with interference fit. Pressing through the rolling elements will cause damage, such as brinell marks or cracks to the elements and rings making the bearing unusable.

For inner ring rotating loads, the bearing is generally interference-fit to the shaft and either expansion fitting or press fitting can be used. Thermal expansion fitting may be the more appropriate method for mounting larger bore bearings.

A tapered-bore bearing can be mounted directly to a tapered shaft or with an adapter or withdrawal sleeve. When a withdrawal sleeve is used for larger bore bearings, the hydraulic mounting procedure will facilitate the process. Note that the use of hydraulic mounting of bearings to tapered journals is also very useful for larger bearing sizes.

For an outer ring rotating load, the bearing is usually interference-fitted with the housing. Either press fitting or shrink fitting may be used. In the case of the latter process, the bearing or bearing outer ring may be cooled to attain the fit.

(1) Mounting Cylindrical-bore Bearings

- Press fitting

Many cylindrical-bore bearing applications use press fitting with the shaft. Use a jig which matches the inner ring as shown in Fig. 8.42. Press fit the inner ring using a press or jack.

To press fit the inner and outer rings simultaneously, use a jig as shown in Fig. 8.43. Apply high-viscosity oil to the shaft and the contact faces of the bearing before press fitting.

- Thermal expansion Fitting

Thermal expansion fitting is an appropriate procedure for mounting larger bore bearings.





This fitting procedure can be completed quickly without applying undue stress to the ring being fit. The ring may be heated using a heating tank or an induction heater. Bearing rings must not be heated to a temperature exceeding 120˚C.

Fig. 8.44 provides the amount of heat rise required, vs. bore size.

After mounting a heated bearing, secure it in the required position otherwise the bearing will tend to move axially as it cools.

Caution: When fitting rings onto a shaft or into a housing using the thermal expansion method, be sure that the procedure can be completed smoothly and quickly. If the ring should misalign or stop movement before it has reached the desired position, it may be very difficult to reposition the ring to the correct location.

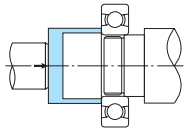

**Fig. 8.42 Press Fitting of Inner Ring**

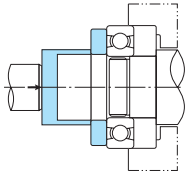

**Fig. 8.43 Simultaneous Press Fitting of Inner Ring**

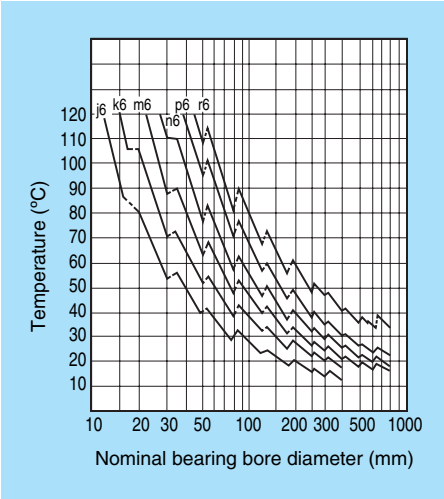


**Fig. 8.44 Relationship between Required Bearing Temperature and Fit**

(2) Mounting Tapered-bore Bearings

Using a split-sleeve adapter permits the mounting of tapered-bore bearings in any axial position on shaft but care must be taken to ensure that the bearing will be located at the correct position.

To mount a tapered-bore bearing using an adapter sleeve, first mount the bearing which is to be the stationary (fixed) bearing. Define and record the distance which the free bearing is expected to move in an axial direction in the housing.

Mount the free bearing so that the axial clearance provided for axial travel of the outer ring of the free bearing is on the outboard side (side farthest from the stationary bearing).

The required interference fit for tapered-bore, Spherical roller bearings can be attained using one of two methods:

a) by driving the bearing onto the sleeve by a predetermined distance; or,
b) by measurement of residual bearing internal clearance as the sleeve is pushed into the bearing inner ring (see Table 8.28). Since exact measurement of the axial drive-up distance is extremely difficult, the residual method is usually the method of choice.

The residual clearance method involves measuring the bearing unmounted internal clearance and then driving up the adapter sleeve until the measured clearance (the residual) = the unmounted (original) clearance - the reduction amount required to attain the correct interference fit (see Table 8.28 for the reduction amount). Clearance measurements are made using a thickness (feeler) gauge. (Note that the thickness gauge should be inserted over two or three unloaded rollers on each row of rollers and that the bearing bore must be in a horizontal position with respect to the shaft axis, with the outer ring centered over the rolling elements).

Table 8.28 shows axial movement and radial clearance reduction for the mounting of Spherical roller bearings.

Heating of larger tapered-bore bearings may be used in conjunction with measurement of travel distance but be sure to check the results using the residual clearance method (taking the unmounted clearance measurements and the final, residual clearance, when the bearing is cool). Also be sure that the bearing is not heated to over 120˚C.

When using a withdrawal sleeve for large-bore bearings, use of a hydraulic assist procedure is recommended. See Fig. 8.45 which shows use of a hydraulic nut.

(3) Other Mounting Precautions

- For paired Tapered roller bearings, be sure to adjust the axial clearance to the specified value using shims where necessary.
- For bearing types with separable inner and outer members such as Cylindrical or Tapered roller bearings, mount the inner and outer ring separately and carefully assemble the shaft into the housing while making sure that no damage occurs to the inner or outer rings or rolling elements.

**Table 8.28 Tapered Bore Spherical Roller Bearings: Axial Movement and Radial Clearance Reduction** mm

| Nominal bearing bore diameter d (mm) | | Radial clearance reduction | | Axial movement | | | |
|---|---|---|---|---|---|---|---|
| | | | | 1/12 Taper | | 1/30 Taper | |
| Over | Incl. | Min | Max | Min | Max | Min | Max |
| 30 | 40 | 0.020 | 0.025 | 0.35 | 0.4 | — | — |
| 40 | 50 | 0.025 | 0.030 | 0.4 | 0.45 | — | — |
| 50 | 65 | 0.030 | 0.040 | 0.45 | 0.6 | — | — |
| 65 | 80 | 0.040 | 0.050 | 0.6 | 0.75 | — | — |
| 80 | 100 | 0.045 | 0.060 | 0.7 | 0.9 | 1.75 | 2.25 |
| 100 | 120 | 0.050 | 0.070 | 0.75 | 1.1 | 1.9 | 2.75 |
| 120 | 140 | 0.065 | 0.090 | 1.1 | 1.4 | 2.75 | 3.5 |
| 140 | 160 | 0.075 | 0.100 | 1.2 | 1.6 | 3.0 | 4.0 |
| 160 | 180 | 0.080 | 0.110 | 1.3 | 1.7 | 3.25 | 4.25 |
| 180 | 200 | 0.090 | 0.120 | 1.4 | 1.9 | 3.5 | 5.0 |
| 200 | 225 | 0.100 | 0.140 | 1.6 | 2.2 | 4.0 | 5.5 |
| 225 | 250 | 0.110 | 0.150 | 1.7 | 2.4 | 4.25 | 6.0 |
| 250 | 280 | 0.120 | 0.170 | 1.9 | 2.7 | 4.75 | 6.75 |
| 280 | 315 | 0.130 | 0.190 | 2.0 | 3.0 | 5.0 | 7.5 |
| 315 | 355 | 0.150 | 0.210 | 2.4 | 3.3 | 6.0 | 8.25 |
| 355 | 400 | 0.170 | 0.230 | 2.6 | 3.6 | 6.5 | 9.0 |
| 400 | 450 | 0.200 | 0.260 | 3.1 | 4.0 | 7.75 | 10.0 |
| 450 | 500 | 0.210 | 0.280 | 3.3 | 4.4 | 8.25 | 11.0 |

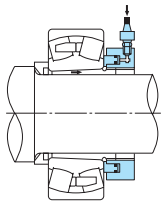

**Fig 8.45 Hydraulic Nut**

## 8.8.4 Mounting and Dismounting Force

An approximate force necessary to install or remove an inner ring from a shaft may be calculated using the following equation.

$$Ka = fk \cdot fe \cdot \Delta de \quad \cdots\cdots (8.23)$$

where:

Ka : Mounting or dismount force (kN)
Δde : effective interference (mm)
fk : factor from Table 8.29
fe : from following equation

$$fe = B \cdot \left[1 - \left(\frac{d}{di}\right)^2\right]$$

where:

B : inner ring width (mm)
d : inner ring bore diameter (mm)
di : mean inner ring outside diameter (mm)
di : ≒ 0.25 (D+3d)···for Cylindrical roller bearings and Self-aligning Ball bearing series 22 and 23
di : ≒ 0.1 (3D+7d)···for other bearings

where

D : Bearing outside diameter

**Table 8.29 fk value**

| Conditions | fk (1) (average) |
|---|---|
| Inner ring pressed to cylindrical shaft | 39 |
| Inner ring pulled from cylindrical shaft | 59 |
| Inner ring press fit to tapered shaft or sleeve | 54 |
| Inner ring pulled from tapered shaft | 44 |
| Tapered sleeve press fit between shaft & bearing | 98 |
| Tapered sleeve pulled from between shaft & bearing | 108 |

Note: (1) Shaft and bearing bore thinly coated with oil.

Fig. 8.46~8.49 show dismount and press fit force by diameter series.

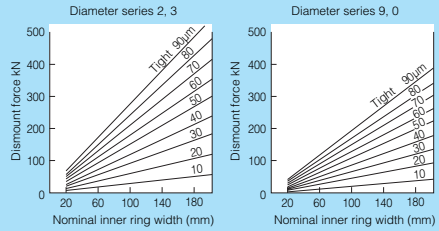


**Fig. 8.46 Dismount force**




**Fig. 8.47 Dismount force**

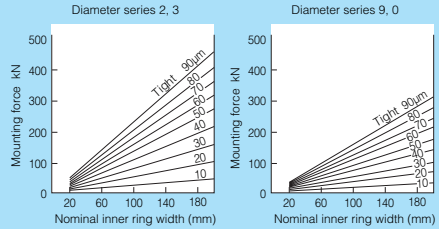


**Fig. 8.48 Mounting Force**




**Fig. 8.49 Mounting Force**

## 8.8.5 Operation Inspection

Verify satisfactory service with a test run. General precautions for a test run are:

- Make sure that all drive covers are in place, all bolts and nuts are tight, and appropriate clearance is provided between the shaft and all stationary parts.
- If possible, manually turn the shaft to see if there is rubbing or abnormal noise.
- If the machine is large and the shaft cannot be turned by hand, start the machine at as low speed as possible and check for rubbing or abnormal noise while coasting the machine.
- If no trouble is found during the above checks, run the machine at the design speed until attaining a steady-state temperature.
- Recheck bolt and nut tightness. Check for oil leaks, and abnormal noise. If possible, extract a sample of the oil and check it for foreign matter.
- Begin regular operation.

If trouble is encountered during machine operation, refer to Section 9, “Trouble-shooting Bearing Problems”.

## 8.8.6 Dismounting

Bearings may be dismounted for periodic machine inspection, or when machine break down has occurred. The condition of all rotating parts and interfaces should be checked and recorded to collect data for operating improvements. The recording of data is essential where a part failure has occurred to enable a solution to any existing trouble.
In dismounting the bearing, check to see:

- If the bearing is satisfactorily mounted. (Bolts, and nuts tightened, interference of slinger with bearing housing, etc.)
- If there is (was) an adequate lubricant supply. Check for lubricant contamination and sample for residue.
- That the inner and outer ring have retained the fits as mounted.
- If the bearing clearance is as specified. If possible, measure the clearance of the mounted bearing.
- The condition of the bearing.

Before starting to dismount a bearing, review the following points:

- Dismount method
- Fit conditions
- Jigs required for dismounting
  - Press (Fig. 8.50)
  - Spanner wrench (Fig. 8.51)
  - Puller (Fig. 8.52)
  - Special puller (Fig. 8.53)
  - Holder (Fig. 8.54)

To dismount a Cylindrical roller bearing, the inner ring may be locally heated with an induction heater to facilitate removal from the shaft. (See Fig. 8.55.)
For large-bore bearings, which are often difficult to dismount, a hydraulic nut or oil injector system is recommended. See Fig. 8.45 and Fig. 8.56 respectively.





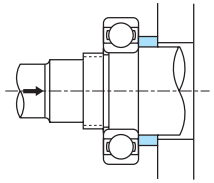

**Fig. 8.50 Dismounting Bearing Using Press**

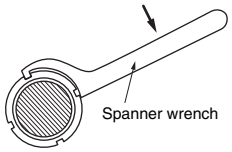


**Fig. 8.51 Dismounting Bearing with Spanner Wrench**

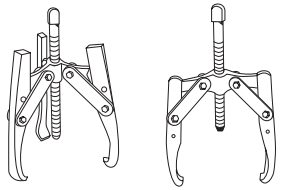

3-jaw puller 2-jaw puller

**Fig 8.52**

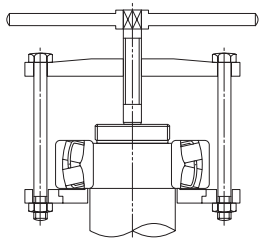

**Fig. 8.53 Dismounting Bearing with Special Puller**

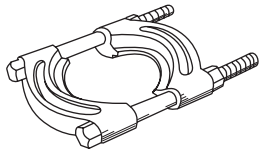

**Fig. 8.54 Puller Attachment**

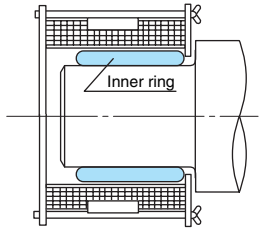


**Fig. 8.55 Inner Ring Removal with Induction Heater**

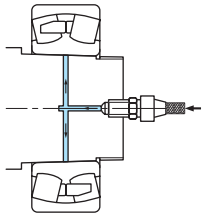

Dismounting Bearing with Oil Injector

**Fig. 8.56**

# 9. Trouble-shooting Bearing Problems

Rolling contact bearings must be carefully handled, mounted, and maintained in order to operate satisfactorily.
The cause of unsatisfactory operation must be determined to prevent recurrence. There are three categories of data which should be gathered to enable the correct diagnosis of bearing problems:

- Time of occurrence.
- Symptoms during operation.
- Condition of bearing.

Although the origin of bearing problems can sometimes be determined using data from only one of the data categories, quick and accurate analysis requires as much data as possible.
See Tables 9.1, 9.2 and 9.3.

**Table 9.1 Diagnosis According to Time that Bearing Problem Occurs**

| Time of Occurrence \ Cause | Bearing selection | Design or manufacture of housing or other parts | Lubricant type, system or amount | Defective bearing | Bearing installation | Seal failure |
|---|---|---|---|---|---|---|
| Soon after installation | ○ | ○ | ○ | ○ | ○ | |
| Soon after periodic disassembly | | | ○ | | ○ | |
| Soon after re-lubrication | | | ○ | | | |
| After replacement or repair of shaft, housing or other parts | | ○ | ○ | | ○ | |
| During normal operation | | | | | | ○ |

**Table 9.2 Diagnosis According to Abnormal Conditions Occurring During Operation**

| Operating condition | | Cause | Remarks |
|---|---|---|---|
| Noise | Low metallic sound. | Impressions on raceway. | Check with audiophone, vibration pickup, etc. |
| | High level metallic sound. | Loss of clearance, poor lubrication. | |
| | Irregular sound. | Excess clearance, contaminants, defect of rolling element surface, improper lubrication. | |
| | Ever-changing sound. | Change of clearance due to temperature rise.<br>Defect in progress on raceway. | |
| Abnormal temperature rise. | | Loss of clearance, creep, insufficient or excess lubricant, excess load. | Use a surface thermometer. |
| Reduction in accuracy. | | Raceway or rolling element damaged by impurities, or insufficient lubricant. | Example: Lathe: stick-slip marks.<br>Grinder: wavy pattern.<br>Cold roll mill: occulting wave pattern. |
| Unstable operation. | | Damaged raceway, rolling element.<br>Foreign matter.<br>Excess clearance. | Example: Electric fan: extreme vibration.<br>Power saw: impact to support.<br>Internal combustion engine: Vibrating crankshaft. |
| Contaminated lubricant. | | Poor lubrication, foreign matter, long term wear. | |





**Table 9.3 Symptoms and Countermeasures of Bearing Problems (examples indicated)**

## (1) Premature Flaking

The repeated heavy stress cycle between the bearing raceway and rolling element surface results in fatigue cracks which become loosened from bearing materials.

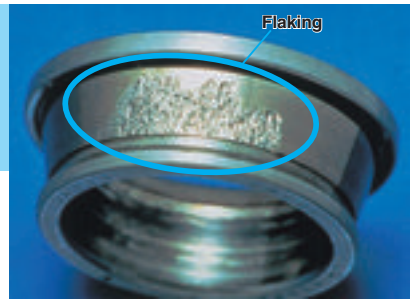


■Causes
- Abnormal axial load or excessive load caused by expanded shaft.
- Deflection or misalignment of shaft.
- Poor parallelism of inner and outer rings.
- Poor lubrication.
- Rusting, Nicks, Galling from dirt, etc.

■Countermeasures
- Clearance fit for the outer ring of one bearing to allow the floating end to move freely axially.
- Correct alignment of shaft and bearing housing.
- Improve mounting and alignment.
- Carefully clean and handle shaft and housing.
- Review type and quantity of lubricant.

## (2) Seizure

Bearing is seized up by excessive heat. Discoloration, softening and fusion of raceway and rolling element.

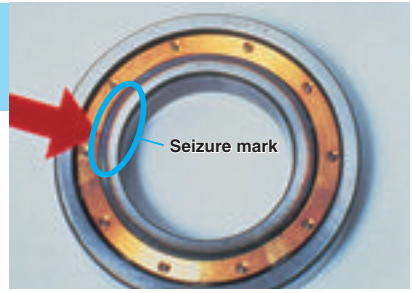


■Causes
- Loss of clearance.
- Operating over limiting speed.
- Poor or improper lubricant.

■Countermeasures
- Review fitting and bearing clearance.
- Review type of bearing.
- Select a proper lubricant, and feed it in proper quantity.

## (3) Breakage

Splits and cracks in the inner/outer ring or rolling element.

■Causes
- Excessive interference fit.
- Bearing seat has larger corner radius than bearing.
- Excess clearance during operation.
- Excess impact load.

■Countermeasures
- Check fits. Finish shaft and sleeve to higher accuracy.
- Make shaft corner radius smaller than that of the bearing.
- Check fits and bearing clearance.
- Re-check load conditions.

**Table 9.3 Symptoms and Countermeasures of Bearing Problems**

## (4) Indentation

Brinelling, indentation and pear skin appearance of bearing raceway and rolling element.

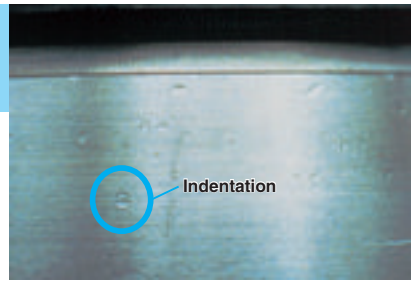


■Causes
- Impact applied during mounting.
- Impact from dropped bearing.
- Contamination
- Load applied to bearing at rest in excess of static load rating.

■Countermeasures
- Carefully handle the bearing.
- Clean shaft and housing.
- Improve the sealing.
- Re-check load conditions.

## (5) Fretting

Occurs when a small relative motion is repeatedly caused in non-rotating bearing. Fretting surface wear produces red colored particles at fitting surface.

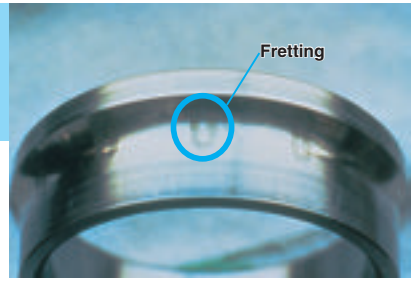


■Causes
- Vibration applied to bearing at rest (e.g. during shipment).
- Oscilation with smaller amplitude.
- Minute clearance on fit surface.
- Slight sliding during operation as a result reduced interference under a load.

■Countermeasures
- Fit the shaft and housing during shipment.
- Apply a preload. Use oil for lubrication.
- Increase the interference.
- Apply oil.

## (6) Scoring

Metal to metal contact of bearing raceway, flange face, rolling element and retainer due to destruction of oil film.

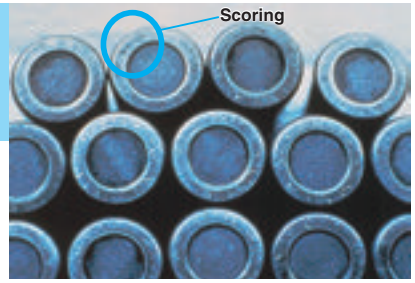


■Causes
- Incorrect lubrication.
- Contamination by foreign matter.
- Deflection or misalignment of shaft. Excessive axial load.
- Sharp speed increase at startup.

■Countermeasures
- Review type and quantity of lubricant.
- Improve sealing and component cleaning.
- Correct mounting errors. Review load conditions.
- Change to smooth acceleration.





## (7) Smearing

Metal to metal contact due to the destruction of oil film.
Sliding motion between outer/inner ring and rolling element.

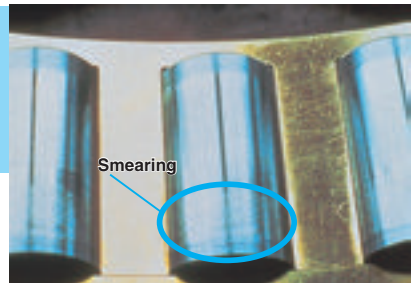


■Causes
- Excess axial load.
- Misalignment of bearing.
- Poor lubrication.
- Intrusion and galling caused by foreign matter.
- High acceleration on start-up.

■Countermeasures
- Correct mounting errors.
- Review the load condition.
- Select a proper lubricant, and feed it in proper quantity.
- Improve the sealing.
- Clean shaft and housing.
- Avoid sharp acceleration.

## (8) Excessive Wear

Abnormal wear of flange face, rolling element and retainer.

■Causes
- Foreign matter and corrosion acting as lapping agent.
- Insufficient or incorrect lubricant.

■Countermeasures
- Improve sealing.
- Clean shaft and housing.
- Check lubricant for type and amount.

## (9) Rusting, Corrosion

Rusting and corrosion of bearing ring and rolling element surface.

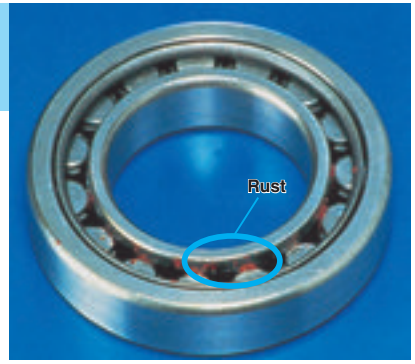


■Causes
- Improper storage, cleaning.
- Improper washing oil.
- Poor rust prevention.
- Corrosive gas, liquid or water.
- Handling with unprotected hands.
- Chemical action of lubricant.

■Countermeasures
- Improve storage and handling.
- Re-check washing oil.
- Review rust prevention.
- Improve sealing.
- Correct handling.
- Check lubricant.

**Table 9.3 Symptoms and Countermeasures of Bearing Problems**

(10) Creep
Galling, wear, sliding and discoloration of fit face.

■Causes
・Insufficient interference.
・Insufficient tightened sleeve.
・Insufficient surface pressure due to low rigidity and inaccurate shaft and housing.

■Countermeasures
・Check fits.
・Tighten sleeve.
・Redesign for greater rigidity.

# Deep-groove Ball Bearings

Accuracy ····· Page 52
Internal clearance ····· Page 64
Dimensions of snap ring ····· Page 45

Because of their versatility, Single-row, Deep-groove Ball Bearings are the most popular of all the ball bearing types. NACHI Deep-groove Ball Bearings are available in a wide range of series defined by the JIS (ISO) standard dimension plan and are also made to meet specialized dimension and configuration requirements. NACHI Deep-groove Ball Bearings are manufactured in both standard precision grade (ISO Grade 0 -ABEC Grade 1) as well as in high-precision grades.

Table 1 shows common, standard configurations of Single-row Deep-groove Ball Bearings.

Table 2 next page shows a comparison of general characteristics of seal and shield designs for Single-row, Deep-groove Ball bearings.

**Table 1. Standard Configuration of Single-row, Deep-groove Ball Bearings**

| Configuration | | Design | Cross section |
|---|---|---|---|
| Open (no seals, shields) | | Consists of inner and outer rings, balls, and cage. | 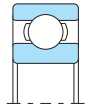 Open |
| (1)Sealed or shielded Bearings | Shield | One or two steel shields provide labyrinth clearance | 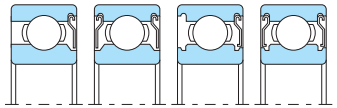 Z ZZ ZE ZZE |
| | Non-contact Rubber Seal(2) | One or two non-contact rubber seals provide labyrinth clearance | 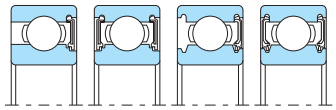 NK 2NK NKE 2NKE |
| | Contact Rubber Seal(2) | One or two contact rubber seals in contact with inner ring | 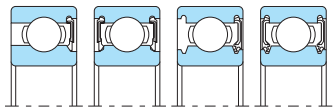 NSL 2NSL NSE 2NSE |
| Snap-ring Groove in Outer Ring | N : with snap-ring groove in outer ring.<br>NR: with groove and snap ring in outer ring.<br>(Use of snap ring allows easy mounting and simplified housing design.)<br>Sealed or shielded bearings are also available, contact NACHI for more information. | | 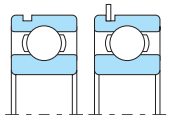 N NR |

Notes: (1) One seal or shield type bearings may have a seal groove on the other side.
Seals or shields for two seal or two shield bearings have the same marks as one seal or one shield bearings.
(2) NKE seals are blue and NSE seals are brown

**Table 2. Comparison of Seal and Shield Characteristics**

| Characteristics | Shield (Z, ZE) | Non-contact Rubber Seal (NK, NKE) | Contact Rubber Seal (NSL, NSE) |
|---|---|---|---|
| Friction torque | Low | Low | Higher than NK, NKE, Z and ZE |
| High speed | Excellent | Excellent | Good (There is some limitation) |
| Grease sealing | Good | Better than Z, ZE | Exellent at low speed<br>①The grease may leak from the bearing at high speeds and high temperature.<br>②The grease may leak in case of outer ring rotation. |
| Dust proof | Good | Better than Z, ZE | Excellent<br>(Can be used in severe dust environments) |
| Water proof | unsuitable | unsuitable | Excellent |
| Recommended operation temperature range for standard filled grease | –25～120°C | –25～120°C | –25～120°C |





## ● Load rating

The values for basic dynamic load rating (Cr) and basic static load rating (Cor) given in the dimension table are for inner rings, outer rings and ball bearings of bearing steel with normal heat treatment.

## ● Attention

(1) Deep-groove Ball Bearings can sustain radial, axial or composite loads. However when excessive axial load is applied, please consult with NACHI.

(2) Because sealed or shielded bearings are designed for inner ring rotating applications, the filled grease may leak when they are used with a high speed outer ring rotating condition. In such a case, please contact NACHI.

(3) When bearings with contact rubber seals are used in a severe operating condition such as high speed or high temperature, the filled grease may leak. In such a case, a design change or another kind of grease is required.

(4) When a bearing is mounted on a shaft (into a housing), force should only be applied to the side face of the inner (outer) ring.

(5) The sealed or shielded bearings should not be washed or heated before mounting.

(6) It should be noted that mounting errors such as misalignment of the bearing rings cause an appreciable increase in noise level.

(7) The bearings must always be subjected to a minimum load to prevent sliding movements occurring between the balls and the raceways.

# Deep-groove Ball Bearings

Bore Diameter: 10～25mm

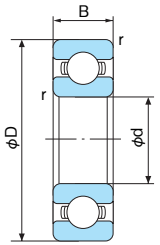


Open

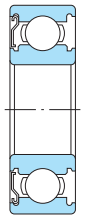

One shield (ZE)

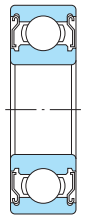

Two shields (ZZE)

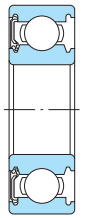

One contact seal (NSE)

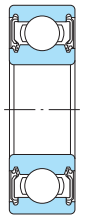

Two contact seals (2NSE)

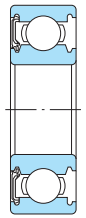

One non-contact seal (NKE)

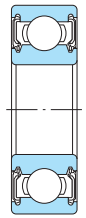

Two non-contact seals (2NKE)

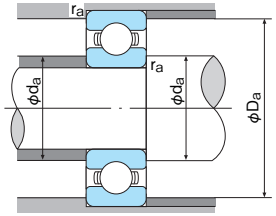


**■Dynamic equivalent radial load**
Pr=XFr+YFa

**■Static equivalent radial load**
Larger value of following to be used:
Por=0.6Fr+0.5Fa
Por=Fr

| $\frac{foFa}{Cor}$ | e | $\frac{Fa}{Fr} \leqq e$ | | $\frac{Fa}{Fr} > e$ | |
|---|---|---|---|---|---|
| | | X | Y | X | Y |
| 0.172 | 0.19 | | | | 2.30 |
| 0.345 | 0.22 | 1 | 0 | 0.56 | 1.99 |
| 0.689 | 0.26 | | | | 1.71 |
| 1.03 | 0.28 | | | | 1.55 |
| 1.38 | 0.30 | 1 | 0 | 0.56 | 1.45 |
| 2.07 | 0.34 | | | | 1.31 |
| 3.45 | 0.38 | | | | 1.15 |
| 5.17 | 0.42 | 1 | 0 | 0.56 | 1.04 |
| 6.89 | 0.44 | | | | 1.00 |

1N=0.102kgf

| Boundary dimensions (mm) | | | | Bearing No. | | | | | | | Basic dynamic load rating Cr (N) | Basic static load rating Cor (N) | Factor fo | Limiting speed ($min^{-1}$) | | | Abutment and fillet dimensions (mm) | | | Mass (kg) | Bearing No. |
|---|---|---|---|---|---|---|---|---|---|---|---|---|---|---|---|---|---|---|---|---|---|
| | | | | | | | | | | | | | | Grease lubrication | | Oil lubrication | | | | | |
| d | D | B | r (min) | Open type | Shield type | | Contact seal type | | Non-contact seal type | | | | | Open type, ZE, ZZE,NKE,2NKE | NSE, 2NSE | Open type, ZE | da (min) | Da (max) | ra (max) | | |
| 10 | 19 | 5 | 0.3 | 6800 | 6800ZE | 6800ZZE | 6800NSE | 6800-2NSE | 6800NKE | 6800-2NKE | 2120 | 985 | 14.2 | 37000 | 24000 | 44000 | 12 | 17 | 0.3 | 0.005 | 6800 |
| | 22 | 6 | 0.3 | 6900 | 6900ZE | 6900ZZE | 6900NSE | 6900-2NSE | 6900NKE | 6900-2NKE | 2490 | 1130 | 14.0 | 33000 | 22000 | 38000 | 12 | 20 | 0.3 | 0.009 | 6900 |
| | 26 | 8 | 0.3 | 6000 | 6000ZE | 6000ZZE | 6000NSE | 6000-2NSE | 6000NKE | 6000-2NKE | 4550 | 1970 | 12.4 | 30000 | 22000 | 36000 | 12 | 24 | 0.3 | 0.019 | 6000 |
| | 30 | 9 | 0.6 | 6200 | 6200ZE | 6200ZZE | 6200NSE | 6200-2NSE | 6200NKE | 6200-2NKE | 5100 | 2390 | 13.2 | 25000 | 18000 | 30000 | 15 | 25 | 0.6 | 0.032 | 6200 |
| | 35 | 11 | 0.6 | 6300 | 6300ZE | 6300ZZE | 6300NSE | 6300-2NSE | 6300NKE | 6300-2NKE | 8100 | 3450 | 11.3 | 23000 | 17000 | 27000 | 15 | 30 | 0.6 | 0.053 | 6300 |
| 12 | 21 | 5 | 0.3 | 6801 | 6801ZE | 6801ZZE | 6801NSE | 6801-2NSE | 6801NKE | 6801-2NKE | 1920 | 1040 | 15.3 | 32000 | 20000 | 39000 | 14 | 19 | 0.3 | 0.006 | 6801 |
| | 24 | 6 | 0.3 | 6901 | 6901ZE | 6901ZZE | 6901NSE | 6901-2NSE | 6901NKE | 6901-2NKE | 2700 | 1320 | 14.5 | 30000 | 20000 | 36000 | 14 | 22 | 0.3 | 0.011 | 6901 |
| | 28 | 8 | 0.3 | 6001 | 6001ZE | 6001ZZE | 6001NSE | 6001-2NSE | 6001NKE | 6001-2NKE | 5100 | 2390 | 13.2 | 28000 | 18000 | 32000 | 14 | 26 | 0.3 | 0.023 | 6001 |
| | 32 | 10 | 0.6 | 6201 | 6201ZE | 6201ZZE | 6201NSE | 6201-2NSE | 6201NKE | 6201-2NKE | 6800 | 3050 | 12.3 | 22000 | 17000 | 28000 | 17 | 27 | 0.6 | 0.037 | 6201 |
| | 37 | 12 | 1 | 6301 | 6301ZE | 6301ZZE | 6301NSE | 6301-2NSE | 6301NKE | 6301-2NKE | 9750 | 4250 | 11.2 | 20000 | 16000 | 24000 | 18 | 31 | 1.0 | 0.060 | 6301 |
| 15 | 24 | 5 | 0.3 | 6802 | 6802ZE | 6802ZZE | 6802NSE | 6802-2NSE | 6802NKE | 6802-2NKE | 2080 | 1260 | 15.8 | 28000 | 17000 | 34000 | 17 | 22 | 0.3 | 0.007 | 6802 |
| | 28 | 7 | 0.3 | 6902 | 6902ZE | 6902ZZE | 6902NSE | 6902-2NSE | 6902NKE | 6902-2NKE | 4300 | 2250 | 14.3 | 26000 | 17000 | 31000 | 17 | 26 | 0.3 | 0.016 | 6902 |
| | 32 | 8 | 0.3 | 16002 | — | — | — | — | — | — | 5600 | 2840 | 13.9 | 24000 | — | 28000 | 20 | 27 | 0.3 | 0.025 | 16002 |
| | 32 | 9 | 0.3 | 6002 | 6002ZE | 6002ZZE | 6002NSE | 6002-2NSE | 6002NKE | 6002-2NKE | 5600 | 2840 | 13.9 | 24000 | 15000 | 28000 | 17 | 30 | 0.3 | 0.032 | 6002 |
| | 35 | 11 | 0.6 | 6202 | 6202ZE | 6202ZZE | 6202NSE | 6202-2NSE | 6202NKE | 6202-2NKE | 7650 | 3700 | 13.1 | 20000 | 15000 | 24000 | 20 | 30 | 0.6 | 0.045 | 6202 |
| | 42 | 13 | 1 | 6302 | 6302ZE | 6302ZZE | 6302NSE | 6302-2NSE | 6302NKE | 6302-2NKE | 11400 | 5400 | 12.3 | 17000 | 13000 | 21000 | 21 | 36 | 1.0 | 0.082 | 6302 |
| 17 | 26 | 5 | 0.3 | 6803 | 6803ZE | 6803ZZE | 6803NSE | 6803-2NSE | 6803NKE | 6803-2NKE | 2630 | 1570 | 16.1 | 26000 | 15000 | 30000 | 19 | 24 | 0.3 | 0.008 | 6803 |
| | 30 | 7 | 0.3 | 6903 | 6903ZE | 6903ZZE | 6903NSE | 6903-2NSE | 6903NKE | 6903-2NKE | 4600 | 2550 | 14.7 | 24000 | 15000 | 29000 | 19 | 28 | 0.3 | 0.018 | 6903 |
| | 35 | 8 | 0.3 | 16003 | — | — | — | — | — | — | 6000 | 3250 | 14.3 | 22000 | — | 26000 | 22 | 30 | 0.3 | 0.032 | 16003 |
| | 35 | 10 | 0.3 | 6003 | 6003ZE | 6003ZZE | 6003NSE | 6003-2NSE | 6003NKE | 6003-2NKE | 6000 | 3250 | 14.3 | 22000 | 14000 | 26000 | 19 | 33 | 0.3 | 0.039 | 6003 |
| | 40 | 12 | 0.6 | 6203 | 6203ZE | 6203ZZE | 6203NSE | 6203-2NSE | 6203NKE | 6203-2NKE | 9550 | 4800 | 13.1 | 18000 | 12000 | 21000 | 22 | 35 | 0.6 | 0.065 | 6203 |
| | 47 | 14 | 1 | 6303 | 6303ZE | 6303ZZE | 6303NSE | 6303-2NSE | 6303NKE | 6303-2NKE | 13600 | 6550 | 12.3 | 16000 | 11000 | 19000 | 23 | 41 | 1.0 | 0.115 | 6303 |
| 20 | 32 | 7 | 0.3 | 6804 | 6804ZE | 6804ZZE | 6804NSE | 6804-2NSE | 6804NKE | 6804-2NKE | 4000 | 2640 | 15.5 | 22000 | 13000 | 26000 | 22 | 30 | 0.3 | 0.019 | 6804 |
| | 37 | 9 | 0.3 | 6904 | 6904ZE | 6904ZZE | 6904NSE | 6904-2NSE | 6904NKE | 6904-2NKE | 6350 | 3700 | 14.8 | 19000 | 12000 | 23000 | 22 | 35 | 0.3 | 0.036 | 6904 |
| | 42 | 8 | 0.3 | 16004 | — | — | — | — | — | — | 7900 | 4500 | 14.5 | 18000 | — | 21000 | 25 | 37 | 0.3 | 0.050 | 16004 |
| | 42 | 12 | 0.6 | 6004 | 6004ZE | 6004ZZE | 6004NSE | 6004-2NSE | 6004NKE | 6004-2NKE | 9400 | 5000 | 13.9 | 18000 | 11000 | 21000 | 24 | 38 | 0.6 | 0.070 | 6004 |
| | 47 | 14 | 1 | 6204 | 6204ZE | 6204ZZE | 6204NSE | 6204-2NSE | 6204NKE | 6204-2NKE | 12800 | 6600 | 13.1 | 16000 | 11000 | 18000 | 26 | 41 | 1.0 | 0.106 | 6204 |
| | 52 | 15 | 1.1 | 6304 | 6304ZE | 6304ZZE | 6304NSE | 6304-2NSE | 6304NKE | 6304-2NKE | 15900 | 7900 | 12.4 | 14000 | 10000 | 17000 | 27 | 45 | 1.1 | 0.144 | 6304 |
| 22 | 50 | 14 | 1 | 62/22 | 62/22ZE | 62/22ZZE | 62/22NSE | 62/22-2NSE | 62/22NKE | 62/22-2NKE | 13900 | 6950 | 13.1 | 14000 | 9700 | 17000 | 28 | 44 | 1.0 | 0.120 | 62/22 |
| | 56 | 16 | 1.1 | 63/22 | 63/22ZE | 63/22ZZE | 63/22NSE | 63/22-2NSE | 63/22NKE | 63/22-2NKE | 18400 | 9250 | 12.4 | 13000 | 9500 | 16000 | 29 | 49 | 1.0 | 0.176 | 63/22 |
| 25 | 37 | 7 | 0.3 | 6805 | 6805ZE | 6805ZZE | 6805NSE | 6805-2NSE | 6805NKE | 6805-2NKE | 4300 | 2940 | 16.0 | 18000 | 10000 | 22000 | 27 | 35 | 0.3 | 0.022 | 6805 |
| | 42 | 9 | 0.3 | 6905 | 6905ZE | 6905ZZE | 6905NSE | 6905-2NSE | 6905NKE | 6905-2NKE | 7000 | 4500 | 15.3 | 16000 | 10000 | 20000 | 27 | 40 | 0.3 | 0.042 | 6905 |
| | 47 | 8 | 0.3 | 16005 | — | — | — | — | — | — | 6950 | 4600 | 15.6 | 15000 | — | 18000 | 30 | 42 | 0.3 | 0.060 | 16005 |
| | 47 | 12 | 0.6 | 6005 | 6005ZE | 6005ZZE | 6005NSE | 6005-2NSE | 6005NKE | 6005-2NKE | 10100 | 5850 | 14.5 | 15000 | 9500 | 18000 | 29 | 43 | 0.6 | 0.079 | 6005 |
| | 52 | 15 | 1 | 6205 | 6205ZE | 6205ZZE | 6205NSE | 6205-2NSE | 6205NKE | 6205-2NKE | 14000 | 7900 | 13.9 | 13000 | 9000 | 16000 | 31 | 46 | 1.0 | 0.128 | 6205 |
| | 62 | 17 | 1.1 | 6305 | 6305ZE | 6305ZZE | 6305NSE | 6305-2NSE | 6305NKE | 6305-2NKE | 23600 | 12100 | 12.2 | 12000 | 8100 | 14000 | 32 | 55 | 1.0 | 0.232 | 6305 |

# Deep-groove Ball Bearings

Bore Diameter: 28～50mm

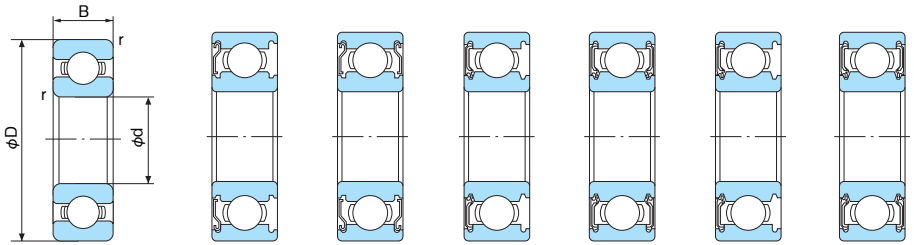


Open | One shield (ZE) | Two shields (ZZE) | One contact seal (NSE) | Two contact seals (2NSE) | One non-contact seal (NKE) | Two non-contact seals (2NKE)

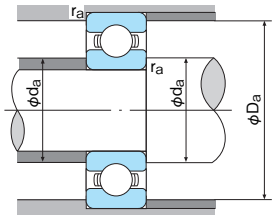


**■Dynamic equivalent radial load**
Pr=XFr+YFa

**■Static equivalent radial load**
Larger value of following to be used:
Por=0.6Fr+0.5Fa
Por=Fr

| $\frac{foFa}{Cor}$ | e | $\frac{Fa}{Fr} \leqq e$ | | $\frac{Fa}{Fr} > e$ | |
|---|---|---|---|---|---|
| | | X | Y | X | Y |
| 0.172 | 0.19 | | | | 2.30 |
| 0.345 | 0.22 | 1 | 0 | 0.56 | 1.99 |
| 0.689 | 0.26 | | | | 1.71 |
| 1.03 | 0.28 | | | | 1.55 |
| 1.38 | 0.30 | 1 | 0 | 0.56 | 1.45 |
| 2.07 | 0.34 | | | | 1.31 |
| 3.45 | 0.38 | | | | 1.15 |
| 5.17 | 0.42 | 1 | 0 | 0.56 | 1.04 |
| 6.89 | 0.44 | | | | 1.00 |

1N=0.102kgf

| Boundary dimensions (mm) | | | | Bearing No. | | | | | | | Basic dynamic load rating Cr (N) | Basic static load rating Cor (N) | Factor fo | Limiting speed ($min^{-1}$) | | | Abutment and fillet dimensions (mm) | | | Mass (kg) | Bearing No. |
|---|---|---|---|---|---|---|---|---|---|---|---|---|---|---|---|---|---|---|---|---|---|
| | | | | | | | | | | | | | | Grease lubrication | | Oil lubrication | | | | | |
| d | D | B | r (min) | Open type | Shield type | | Contact seal type | | Non-contact seal type | | | | | Open type, ZE, ZZE,NKE,2NKE | NSE, 2NSE | Open type, ZE | da (min) | Da (max) | ra (max) | | |
| 28 | 58 | 16 | 1 | 62/28 | 62/28ZE | 62/28ZZE | 62/28NSE | 62/28-2NSE | 62/28NKE | 62/28-2NKE | 17900 | 9750 | 13.1 | 12000 | 8200 | 14000 | 34 | 52 | 1.0 | 0.175 | 62/28 |
| | 68 | 18 | 1.1 | 63/28 | 63/28ZE | 63/28ZZE | 63/28NSE | 63/28-2NSE | 63/28NKE | 63/28-2NSE | 26800 | 14000 | 12.4 | 11000 | 7500 | 13000 | 35 | 61 | 1.0 | 0.287 | 63/28 |
| 30 | 42 | 7 | 0.3 | 6806 | 6806ZE | 6806ZZE | 6806NSE | 6806-2NSE | 6806NKE | 6806-2NKE | 5350 | 3800 | 16.4 | 15000 | 9000 | 18000 | 32 | 40 | 0.3 | 0.026 | 6806 |
| | 47 | 9 | 0.3 | 6906 | 6906ZE | 6906ZZE | 6906NSE | 6906-2NSE | 6906NKE | 6906-2NKE | 7250 | 5000 | 15.8 | 14000 | 8500 | 17000 | 32 | 45 | 0.3 | 0.045 | 6906 |
| | 55 | 9 | 0.3 | 16006 | — | — | — | — | — | — | 9950 | 6550 | 15.4 | 13000 | — | 15000 | 35 | 50 | 0.3 | 0.085 | 16006 |
| | 55 | 13 | 1 | 6006 | 6006ZE | 6006ZZE | 6006NSE | 6006-2NSE | 6006NKE | 6006-2NKE | 13200 | 8300 | 14.8 | 13000 | 8000 | 15000 | 35 | 50 | 1.0 | 0.117 | 6006 |
| | 62 | 16 | 1 | 6206 | 6206ZE | 6206ZZE | 6206NSE | 6206-2NSE | 6206NKE | 6206-2NKE | 19500 | 11300 | 13.9 | 11000 | 7500 | 13000 | 36 | 56 | 1.0 | 0.199 | 6206 |
| | 72 | 19 | 1.1 | 6306 | 6306ZE | 6306ZZE | 6306NSE | 6306-2NSE | 6306NKE | 6306-2NKE | 26700 | 15000 | 13.2 | 10000 | 6700 | 12000 | 37 | 65 | 1.0 | 0.346 | 6306 |
| 32 | 65 | 17 | 1 | 62/32 | 62/32ZE | 62/32ZZE | 62/32NSE | 62/32-2NSE | 62/32NKE | 62/32-2NKE | 22400 | 13100 | 13.6 | 11000 | 7100 | 12000 | 38 | 59 | 1.0 | 0.230 | 62/32 |
| | 75 | 20 | 1.1 | 63/32 | 63/32ZE | 63/32ZZE | 63/32NSE | 63/32-2NSE | 63/32NKE | 63/32-2NKE | 30000 | 16200 | 12.7 | 9500 | 6500 | 11000 | 39 | 68 | 1.0 | 0.382 | 63/32 |
| 35 | 47 | 7 | 0.3 | 6807 | 6807ZE | 6807ZZE | 6807NSE | 6807-2NSE | 6807NKE | 6807-2NKE | 4750 | 3800 | 16.4 | 14000 | 7600 | 16000 | 37 | 45 | 0.3 | 0.029 | 6807 |
| | 55 | 10 | 0.6 | 6907 | 6907ZE | 6907ZZE | 6907NSE | 6907-2NSE | 6907NKE | 6907-2NKE | 10400 | 7150 | 15.6 | 12000 | 7500 | 15000 | 39 | 51 | 0.6 | 0.073 | 6907 |
| | 62 | 9 | 0.3 | 16007 | — | — | — | — | — | — | 11700 | 8150 | 15.6 | 12000 | — | 14000 | 40 | 57 | 0.6 | 0.110 | 16007 |
| | 62 | 14 | 1 | 6007 | 6007ZE | 6007ZZE | 6007NSE | 6007-2NSE | 6007NKE | 6007-2NKE | 16000 | 10300 | 14.8 | 12000 | 6800 | 14000 | 40 | 57 | 1.0 | 0.156 | 6007 |
| | 72 | 17 | 1.1 | 6207 | 6207ZE | 6207ZZE | 6207NSE | 6207-2NSE | 6207NKE | 6207-2NKE | 25700 | 15300 | 13.8 | 9800 | 6300 | 11000 | 42 | 65 | 1.0 | 0.288 | 6207 |
| | 80 | 21 | 1.5 | 6307 | 6307ZE | 6307ZZE | 6307NSE | 6307-2NSE | 6307NKE | 6307-2NKE | 33500 | 19200 | 13.2 | 8800 | 6000 | 10000 | 44 | 71 | 1.5 | 0.457 | 6307 |
| 40 | 52 | 7 | 0.3 | 6808 | 6808ZE | 6808ZZE | 6808NSE | 6808-2NSE | 6808NKE | 6808-2NKE | 5950 | 4900 | 16.2 | 12000 | 6700 | 14000 | 42 | 50 | 0.3 | 0.033 | 6808 |
| | 62 | 12 | 0.6 | 6908 | 6908ZE | 6908ZZE | 6908NSE | 6908-2NSE | 6908NKE | 6908-2NKE | 13700 | 9950 | 15.8 | 11000 | 6300 | 13000 | 44 | 58 | 0.6 | 0.108 | 6908 |
| | 68 | 9 | 0.3 | 16008 | — | — | — | — | — | — | 11100 | 8550 | 16.1 | 10000 | — | 12000 | 45 | 63 | 0.3 | 0.125 | 16008 |
| | 68 | 15 | 1 | 6008 | 6008ZE | 6008ZZE | 6008NSE | 6008-2NSE | 6008NKE | 6008-2NKE | 16800 | 11500 | 15.3 | 10000 | 6100 | 12000 | 45 | 63 | 1.0 | 0.194 | 6008 |
| | 80 | 18 | 1.1 | 6208 | 6208ZE | 6208ZZE | 6208NSE | 6208-2NSE | 6208NKE | 6208-2NKE | 29100 | 17900 | 14.0 | 8700 | 5600 | 10000 | 47 | 73 | 1.0 | 0.366 | 6208 |
| | 90 | 23 | 1.5 | 6308 | 6308ZE | 6308ZZE | 6308NSE | 6308-2NSE | 6308NKE | 6308-2NKE | 40500 | 24100 | 13.2 | 7800 | 5300 | 9200 | 49 | 81 | 1.5 | 0.633 | 6308 |
| 45 | 58 | 7 | 0.3 | 6809 | 6809ZE | 6809ZZE | 6809NSE | 6809-2NSE | 6809NKE | 6809-2NKE | 5350 | 4900 | 16.1 | 11000 | 6000 | 13000 | 47 | 56 | 0.3 | 0.040 | 6809 |
| | 68 | 12 | 0.6 | 6909 | 6909ZE | 6909ZZE | 6909NSE | 6909-2NSE | 6909NKE | 6909-2NKE | 14100 | 10900 | 16.1 | 10000 | 5600 | 12000 | 49 | 64 | 0.6 | 0.122 | 6909 |
| | 75 | 10 | 0.6 | 16009 | — | — | — | — | — | — | 12900 | 10500 | 16.2 | 9200 | — | 11000 | 52 | 68 | 0.6 | 0.170 | 16009 |
| | 75 | 16 | 1 | 6009 | 6009ZE | 6009ZZE | 6009NSE | 6009-2NSE | 6009NKE | 6009-2NKE | 20900 | 15200 | 15.3 | 9200 | 5400 | 11000 | 50 | 70 | 1.0 | 0.246 | 6009 |
| | 85 | 19 | 1.1 | 6209 | 6209ZE | 6209ZZE | 6209NSE | 6209-2NSE | 6209NKE | 6209-2NKE | 32500 | 20500 | 14.1 | 7800 | 5300 | 9300 | 52 | 78 | 1.0 | 0.407 | 6209 |
| | 100 | 25 | 1.5 | 6309 | 6309ZE | 6309ZZE | 6309NSE | 6309-2NSE | 6309NKE | 6309-2NKE | 53000 | 32000 | 13.1 | 7000 | 4800 | 8200 | 54 | 91 | 1.5 | 0.833 | 6309 |
| 50 | 65 | 7 | 0.3 | 6810 | 6810ZE | 6810ZZE | 6810NSE | 6810-2NSE | 6810NKE | 6810-2NKE | 6400 | 5800 | 16.1 | 10000 | 5300 | 12000 | 52 | 63 | 0.3 | 0.052 | 6810 |
| | 72 | 12 | 0.6 | 6910 | 6910ZE | 6910ZZE | 6910NSE | 6910-2NSE | 6910NKE | 6910-2NKE | 14500 | 11700 | 16.1 | 9500 | 5300 | 11000 | 54 | 68 | 0.6 | 0.125 | 6910 |
| | 80 | 10 | 0.6 | 16010 | — | — | — | — | — | — | 16100 | 13100 | 16.1 | 8500 | — | 10000 | 57 | 73 | 0.6 | 0.180 | 16010 |
| | 80 | 16 | 1 | 6010 | 6010ZE | 6010ZZE | 6010NSE | 6010-2NSE | 6010NKE | 6010-2NKE | 21800 | 16600 | 15.6 | 8500 | 5000 | 10000 | 55 | 75 | 1.0 | 0.264 | 6010 |
| | 90 | 20 | 1.1 | 6210 | 6210ZE | 6210ZZE | 6210NSE | 6210-2NSE | 6210NKE | 6210-2NKE | 35000 | 23200 | 14.4 | 7100 | 4800 | 8600 | 57 | 83 | 1.0 | 0.463 | 6210 |
| | 110 | 27 | 2 | 6310 | 6310ZE | 6310ZZE | 6310NSE | 6310-2NSE | 6310NKE | 6310-2NKE | 62000 | 38000 | 13.1 | 6400 | 4300 | 7500 | 60 | 100 | 2.0 | 1.07 | 6310 |

# Deep-groove Ball Bearings

Bore Diameter: 55～80mm

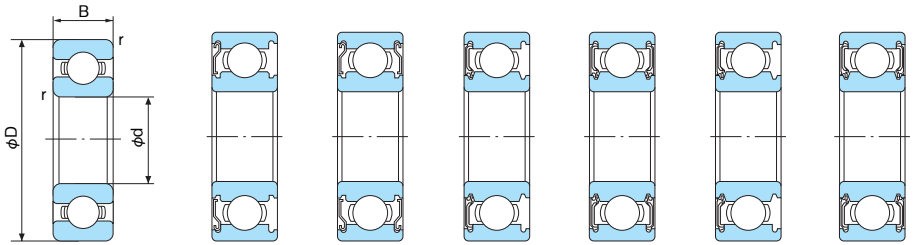


Open | One shield (ZE) | Two shields (ZZE) | One contact seal (NSE) | Two contact seals (2NSE) | One non-contact seal (NKE) | Two non-contact seals (2NKE)

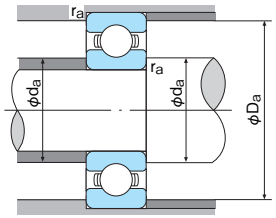


**■Dynamic equivalent radial load**
Pr=XFr+YFa

**■Static equivalent radial load**
Larger value of following to be used:
Por=0.6Fr+0.5Fa
Por=Fr

| $\frac{foFa}{Cor}$ | e | $\frac{Fa}{Fr} \leq e$ | | $\frac{Fa}{Fr} > e$ | |
|---|---|---|---|---|---|
| | | X | Y | X | Y |
| 0.172 | 0.19 | | | | 2.30 |
| 0.345 | 0.22 | 1 | 0 | 0.56 | 1.99 |
| 0.689 | 0.26 | | | | 1.71 |
| 1.03 | 0.28 | | | | 1.55 |
| 1.38 | 0.30 | 1 | 0 | 0.56 | 1.45 |
| 2.07 | 0.34 | | | | 1.31 |
| 3.45 | 0.38 | | | | 1.15 |
| 5.17 | 0.42 | 1 | 0 | 0.56 | 1.04 |
| 6.89 | 0.44 | | | | 1.00 |

1N=0.102kgf

| Boundary dimensions (mm) | | | | Bearing No. | | | | | | | Basic dynamic load rating Cr (N) | Basic static load rating Cor (N) | Factor fo | Limiting speed ($min^{-1}$) | | | Abutment and fillet dimensions (mm) | | | Mass (kg) | Bearing No. |
|---|---|---|---|---|---|---|---|---|---|---|---|---|---|---|---|---|---|---|---|---|---|
| | | | | | | | | | | | | | | Grease lubrication | | Oil lubrication | | | | | |
| d | D | B | r (min) | Open type | Shield type | | Contact seal type | | Non-contact seal type | | | | | Open type, ZE, ZZE,NKE,2NKE | NSE, 2NSE | Open type, ZE | da (min) | Da (max) | ra (max) | | |
| 55 | 72 | 9 | 0.3 | 6811 | 6811Z | 6811ZZ | – | – | – | – | 8800 | 8100 | 16.2 | 8700 | – | 10000 | 57 | 70 | 0.3 | 0.083 | 6811 |
| | 80 | 13 | 1 | 6911 | 6911Z | 6911ZZ | – | – | – | – | 16000 | 13200 | 16.2 | 8200 | – | 9600 | 60 | 75 | 1.0 | 0.177 | 6911 |
| | 90 | 11 | 0.6 | 16011 | – | – | – | – | – | – | 15200 | 13500 | 16.5 | 7700 | – | 9000 | 62 | 83 | 0.6 | 0.260 | 16011 |
| | 90 | 18 | 1.1 | 6011 | 6011ZE | 6011ZZE | 6011NSE | 6011-2NSE | 6011NKE | 6011-2NKE | 28300 | 21300 | 15.4 | 7700 | 4500 | 9000 | 61 | 84 | 1.0 | 0.384 | 6011 |
| | 100 | 21 | 1.5 | 6211 | 6211ZE | 6211ZZE | 6211NSE | 6211-2NSE | 6211NKE | 6211-2NSE | 43500 | 29300 | 14.4 | 6400 | 4300 | 7700 | 64 | 91 | 1.5 | 0.607 | 6211 |
| | 120 | 29 | 2 | 6311 | 6311ZE | 6311ZZE | 6311NSE | 6311-2NSE | 6311NKE | 6311-2NKE | 71500 | 44500 | 13.1 | 5800 | 4000 | 6800 | 65 | 110 | 2.0 | 1.37 | 6311 |
| 60 | 78 | 10 | 0.3 | 6812 | 6812Z | 6812ZZ | – | – | – | – | 11500 | 10600 | 16.3 | 8000 | – | 9500 | 62 | 76 | 0.3 | 0.106 | 6812 |
| | 85 | 13 | 1 | 6912 | 6912Z | 6912ZZ | – | – | – | – | 15200 | 13500 | 16.5 | 7600 | – | 9000 | 65 | 80 | 1.0 | 0.191 | 6912 |
| | 95 | 11 | 0.6 | 16012 | – | – | – | – | – | – | 16200 | 14300 | 16.5 | 7100 | – | 8500 | 67 | 88 | 0.6 | 0.280 | 16012 |
| | 95 | 18 | 1.1 | 6012 | 6012ZE | 6012ZZE | 6012NSE | 6012-2NSE | 6012NKE | 6012-2NKE | 29400 | 23200 | 15.5 | 7100 | 4100 | 8500 | 66 | 89 | 1.0 | 0.418 | 6012 |
| | 110 | 22 | 1.5 | 6212 | 6212ZE | 6212ZZE | 6212NSE | 6212-2NSE | 6212NKE | 6212-2NKE | 52500 | 36000 | 14.3 | 6000 | 3800 | 7100 | 69 | 101 | 1.5 | 0.783 | 6212 |
| | 130 | 31 | 2.1 | 6312 | 6312ZE | 6312ZZE | 6312NSE | 6312-2NSE | 6312NKE | 6312-2NKE | 82000 | 52000 | 13.2 | 5400 | 3600 | 6300 | 72 | 118 | 2.0 | 1.70 | 6312 |
| 65 | 85 | 10 | 0.6 | 6813 | 6813Z | 6813ZZ | – | – | – | – | 11900 | 11500 | 16.2 | 7500 | – | 8700 | 69 | 81 | 0.6 | 0.125 | 6813 |
| | 90 | 13 | 1 | 6913 | 6913Z | 6913ZZ | – | – | – | – | 17400 | 16000 | 16.5 | 7100 | – | 8500 | 70 | 85 | 1.0 | 0.200 | 6913 |
| | 100 | 11 | 0.6 | 16013 | – | – | – | – | – | – | 20500 | 18600 | 16.4 | 6700 | – | 8000 | 72 | 93 | 0.6 | 0.300 | 16013 |
| | 100 | 18 | 1.1 | 6013 | 6013ZE | 6013ZZE | 6013NSE | 6013-2NSE | 6013NKE | 6013-2NKE | 30500 | 25200 | 15.7 | 6700 | 4000 | 8000 | 71 | 94 | 1.0 | 0.438 | 6013 |
| | 120 | 23 | 1.5 | 6213 | 6213ZE | 6213ZZE | 6213NSE | 6213-2NSE | 6213NKE | 6213-2NKE | 57000 | 40000 | 14.4 | 5500 | 3600 | 6500 | 74 | 111 | 1.5 | 0.990 | 3213 |
| | 140 | 33 | 2.1 | 6313 | 6313ZE | 6313ZZE | 6313NSE | 6313-2NSE | 6313NKE | 6313-2NKE | 92500 | 59500 | 13.2 | 4900 | 3400 | 6000 | 77 | 128 | 2.0 | 2.08 | 6313 |
| 70 | 90 | 10 | 0.6 | 6814 | 6814Z | 6814ZZ | – | – | – | – | 12100 | 11900 | 16.1 | 7000 | – | 8100 | 74 | 86 | 0.6 | 0.135 | 6814 |
| | 100 | 16 | 1 | 6914 | 6914Z | 6914ZZ | – | – | – | – | 23700 | 21100 | 16.3 | 6500 | – | 7700 | 75 | 95 | 1.0 | 0.327 | 6914 |
| | 110 | 13 | 0.6 | 16014 | – | – | – | – | – | – | 26800 | 23600 | 16.2 | 6100 | – | 7100 | 77 | 103 | 0.6 | 0.433 | 16014 |
| | 110 | 20 | 1.1 | 6014 | 6014ZE | 6014ZZE | 6014NSE | 6014-2NSE | 6014NKE | 6014-2NKE | 38000 | 31000 | 15.6 | 6100 | 3600 | 7100 | 76 | 104 | 1.0 | 0.607 | 6014 |
| | 125 | 24 | 1.5 | 6214 | 6214ZE | 6214ZZE | 6214NSE | 6214-2NSE | 6214NKE | 6214-2NKE | 62000 | 44000 | 14.4 | 5100 | 3400 | 6300 | 79 | 116 | 1.5 | 1.07 | 6214 |
| | 150 | 35 | 2.1 | 6314 | 6314ZE | 6314ZZE | 6314NSE | 6314-2NSE | 6314NKE | 6314-2NKE | 104000 | 68000 | 13.2 | 4600 | 3200 | 5400 | 82 | 138 | 2.0 | 2.52 | 6314 |
| 75 | 95 | 10 | 0.6 | 6815 | 6815Z | 6815ZZ | – | – | – | – | 12500 | 12800 | 16.0 | 6500 | – | 7600 | 79 | 91 | 0.6 | 0.145 | 6815 |
| | 105 | 16 | 1 | 6915 | 6915Z | 6915ZZ | – | – | – | – | 20800 | 19700 | 16.5 | 6200 | – | 7200 | 80 | 100 | 1.0 | 0.345 | 6915 |
| | 115 | 13 | 0.6 | 16015 | – | – | – | – | – | – | 27600 | 25300 | 16.4 | 5700 | – | 6700 | 82 | 108 | 0.6 | 0.457 | 16015 |
| | 115 | 20 | 1.1 | 6015 | 6015ZE | 6015ZZE | 6015NSE | 6015-2NSE | 6015NKE | 6015-2NKE | 39500 | 33500 | 15.7 | 5700 | 3400 | 6700 | 81 | 109 | 1.0 | 0.645 | 6015 |
| | 130 | 25 | 1.5 | 6215 | 6215ZE | 6215ZZE | 6215NSE | 6215-2NSE | 6215NKE | 6215-2NKE | 66000 | 49500 | 14.7 | 4800 | 3200 | 5600 | 84 | 121 | 1.5 | 1.18 | 6215 |
| | 160 | 37 | 2.1 | 6315 | 6315ZE | 6315ZZE | 6315NSE | 6315-2NSE | 6315NKE | 6315-2NKE | 113000 | 77000 | 13.2 | 4300 | 2900 | 5000 | 87 | 148 | 2.0 | 3.02 | 6315 |
| 80 | 100 | 10 | 0.6 | 6816 | 6816Z | 6816ZZ | – | – | – | – | 12700 | 13300 | 15.9 | 6000 | – | 7100 | 84 | 96 | 0.6 | 0.155 | 6816 |
| | 110 | 16 | 1 | 6916 | 6916Z | 6916ZZ | – | – | – | – | 27600 | 25300 | 16.4 | 5700 | – | 6700 | 85 | 105 | 1.0 | 0.363 | 6916 |
| | 125 | 14 | 0.6 | 16016 | – | – | – | – | – | – | 32000 | 29600 | 16.4 | 5300 | – | 6300 | 87 | 118 | 0.6 | 0.597 | 16016 |
| | 125 | 22 | 1.1 | 6016 | 6016Z | 6016ZZ | – | – | – | – | 47500 | 39500 | 15.6 | 5300 | – | 6300 | 86 | 119 | 1.0 | 0.855 | 6016 |
| | 140 | 26 | 2 | 6216 | 6216Z | 6216ZZ | 6216NSL | 6216-2NSL | 6216NK | 6216-2NK | 72500 | 53000 | 14.6 | 4500 | 3000 | 5300 | 90 | 130 | 2.0 | 1.40 | 6216 |
| | 170 | 39 | 2.1 | 6316 | 6316Z | 6316ZZ | 6316NSL | 6316-2NSL | 6316NK | 6316-2NK | 123000 | 86500 | 13.2 | 4000 | 2800 | 4800 | 92 | 158 | 2.0 | 3.59 | 6316 |

# Deep-groove Ball Bearings

Bore Diameter: 85～110mm

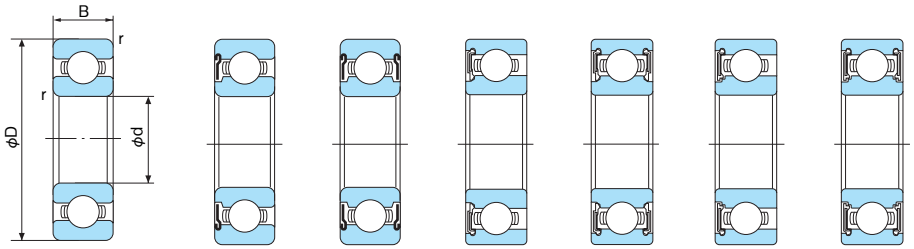


Open type | One shield (Z) | Two shields (ZZ) | One contact seal (NSL) | Two contact seals (2NSL) | One non-contact seal (NK) | Two non-contact seals (2NK)

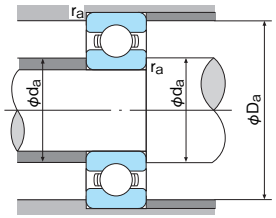


**■Dynamic equivalent radial load**
Pr=XFr+YFa

**■Static equivalent radial load**
Larger value of following to be used:
Por=0.6Fr+0.5Fa
Por=Fr

| $\frac{f_0Fa}{Cor}$ | e | $\frac{Fa}{Fr} \leq e$ X | $\frac{Fa}{Fr} \leq e$ Y | $\frac{Fa}{Fr} > e$ X | $\frac{Fa}{Fr} > e$ Y |
|---|---|---|---|---|---|
| 0.172 | 0.19 | | | | 2.30 |
| 0.345 | 0.22 | 1 | 0 | 0.56 | 1.99 |
| 0.689 | 0.26 | | | | 1.71 |
| 1.03 | 0.28 | | | | 1.55 |
| 1.38 | 0.30 | 1 | 0 | 0.56 | 1.45 |
| 2.07 | 0.34 | | | | 1.31 |
| 3.45 | 0.38 | | | | 1.15 |
| 5.17 | 0.42 | 1 | 0 | 0.56 | 1.04 |
| 6.89 | 0.44 | | | | 1.00 |

1N=0.102kgf

| Boundary dimensions (mm) | | | | Bearing No. | | | | | | | Basic dynamic load rating Cr (N) | Basic static load rating Cor (N) | Factor fo | Limiting speed (min⁻¹) Grease lubrication | | Limiting speed (min⁻¹) Oil lubrication | Abutment and fillet dimensions (mm) | | | Mass (kg) | Bearing No. |
|---|---|---|---|---|---|---|---|---|---|---|---|---|---|---|---|---|---|---|---|---|---|
| d | D | B | r (min) | Open type | Shield type | | Contact seal type | | Non-contact seal type | | | | | Open type, Z, ZZ, NK, 2NK | NSL, 2NSL | Open type, Z | da (min) | Da (max) | ra (max) | | |
| 85 | 110 | 13 | 1 | 6817 | 6817Z | 6817ZZ | – | – | – | – | 18700 | 19000 | 16.2 | 5700 | – | 6700 | 90 | 105 | 1.0 | 0.265 | 6817 |
| | 120 | 18 | 1.1 | 6917 | 6917Z | 6917ZZ | – | – | – | – | 32000 | 29600 | 16.4 | 5400 | – | 6300 | 91 | 113 | 1.0 | 0.517 | 6917 |
| | 130 | 14 | 0.6 | 16017 | – | – | – | – | – | – | 31500 | 29800 | 16.4 | 5000 | – | 6000 | 92 | 123 | 0.6 | 0.626 | 16017 |
| | 130 | 22 | 1.1 | 6017 | 6017Z | 6017ZZ | – | – | – | – | 49500 | 43000 | 15.7 | 5000 | – | 6000 | 91 | 124 | 1.1 | 0.895 | 6017 |
| | 150 | 28 | 2 | 6217 | 6217Z | 6217ZZ | 6217NSL | 6217-2NSL | 6217NK | 6217-2NK | 84000 | 62000 | 14.5 | 4300 | 2800 | 5000 | 95 | 140 | 2.0 | 1.79 | 6217 |
| | 180 | 41 | 3 | 6317 | 6317Z | 6317ZZ | 6317NSL | 6317-2NSL | 6317NK | 6317-2NK | 133000 | 96500 | 13.3 | 3800 | 2600 | 4500 | 99 | 166 | 2.5 | 4.23 | 6317 |
| 90 | 115 | 13 | 1 | 6818 | 6818Z | 6818ZZ | – | – | – | – | 19000 | 19700 | 16.1 | 5400 | – | 6300 | 95 | 110 | 1.0 | 0.280 | 6818 |
| | 125 | 18 | 1.1 | 6918 | 6918Z | 6918ZZ | – | – | – | – | 33000 | 31500 | 16.4 | 5100 | – | 6000 | 96 | 119 | 1.0 | 0.540 | 6918 |
| | 140 | 16 | 1 | 16018 | – | – | – | – | – | – | 41500 | 39500 | 16.3 | 4800 | – | 5600 | 99 | 131 | 1.0 | 0.848 | 16018 |
| | 140 | 24 | 1.5 | 6018 | 6018Z | 6018ZZ | – | – | – | – | 58000 | 49500 | 15.6 | 4800 | – | 5600 | 97 | 133 | 1.5 | 1.17 | 6018 |
| | 160 | 30 | 2 | 6218 | 6218Z | 6218ZZ | 6218NSL | 6218-2NSL | 6218NK | 6218-2NK | 96000 | 71500 | 14.5 | 4000 | 2600 | 4800 | 100 | 150 | 2.0 | 2.15 | 6218 |
| | 190 | 43 | 3 | 6318 | 6318Z | 6318ZZ | 6318NSL | 6318-2NSL | 6318NK | 6318-2NK | 143000 | 107000 | 13.3 | 3600 | 2400 | 4300 | 104 | 176 | 2.5 | 4.91 | 6318 |
| 95 | 120 | 13 | 1 | 6819 | 6819Z | 6819ZZ | – | – | – | – | 19300 | 20500 | 16.0 | 5000 | – | 6000 | 100 | 115 | 1.0 | 0.298 | 6819 |
| | 130 | 18 | 1.1 | 6919 | 6919Z | 6919ZZ | – | – | – | – | 33500 | 33500 | 16.5 | 4800 | – | 5700 | 101 | 124 | 1.0 | 0.567 | 6919 |
| | 145 | 16 | 1 | 16019 | – | – | – | – | – | – | 41000 | 39500 | 16.4 | 4600 | – | 5300 | 104 | 136 | 1.0 | 0.885 | 16019 |
| | 145 | 24 | 1.5 | 6019 | 6019Z | 6019ZZ | – | – | – | – | 60500 | 54000 | 15.8 | 4500 | – | 5300 | 102 | 138 | 1.5 | 1.22 | 6019 |
| | 170 | 32 | 2.1 | 6219 | 6219Z | 6219ZZ | 6219NSL | 6219-2NSL | 6219NK | 6219-2NK | 109000 | 81500 | 14.4 | 3800 | 2600 | 4500 | 107 | 158 | 2.0 | 2.62 | 6219 |
| | 200 | 45 | 3 | 6319 | 6319Z | 6319ZZ | 6319NSL | 6319-2NSL | 6319NK | 6319-2NK | 153000 | 118000 | 13.3 | 3300 | 2400 | 3900 | 109 | 186 | 2.5 | 5.67 | 6319 |
| 100 | 125 | 13 | 1 | 6820 | 6820Z | 6820ZZ | – | – | – | – | 19600 | 21200 | 16.0 | 4800 | – | 5600 | 105 | 120 | 1.0 | 0.311 | 6820 |
| | 140 | 20 | 1.1 | 6920 | 6920Z | 6920ZZ | – | – | – | – | 42500 | 36500 | 16.5 | 4500 | – | 5300 | 106 | 134 | 1.0 | 0.771 | 6920 |
| | 150 | 16 | 1 | 16020 | – | – | – | – | – | – | 37500 | 39500 | 16.4 | 4300 | – | 5300 | 109 | 141 | 1.0 | 0.910 | 16020 |
| | 150 | 24 | 1.5 | 6020 | 6020Z | 6020ZZ | – | – | – | – | 60000 | 54000 | 15.9 | 4300 | – | 5300 | 107 | 143 | 1.5 | 1.26 | 6020 |
| | 180 | 34 | 2.1 | 6220 | 6220Z | 6220ZZ | 6220NSL | 6220-2NSL | 6220NK | 6220-2NK | 122000 | 93000 | 14.4 | 3600 | 2400 | 4300 | 112 | 168 | 2.0 | 3.14 | 6220 |
| | 215 | 47 | 3 | 6320 | 6320Z | 6320ZZ | 6320NSL | 6320-2NSL | 6320NK | 6320-2NK | 173000 | 141000 | 13.2 | 3200 | 2200 | 3700 | 114 | 201 | 2.5 | 7.00 | 6320 |
| 105 | 130 | 13 | 1 | 6821 | – | – | – | – | – | – | 19900 | 21900 | 15.9 | 4800 | – | 5600 | 110 | 125 | 1.0 | 0.325 | 6821 |
| | 145 | 20 | 1.1 | 6921 | – | – | – | – | – | – | 42500 | 42000 | 16.4 | 4300 | – | 5300 | 111 | 139 | 1.0 | 0.793 | 6921 |
| | 160 | 18 | 1 | 16021 | – | – | – | – | – | – | 37500 | 50500 | 16.4 | 4000 | – | 4800 | 114 | 151 | 1.0 | 1.20 | 16021 |
| | 160 | 26 | 2 | 6021 | 6021Z | 6021ZZ | – | – | – | – | 72500 | 65500 | 15.8 | 4000 | – | 4800 | 113 | 152 | 2.0 | 1.60 | 6021 |
| | 190 | 36 | 2.1 | 6221 | 6221Z | 6221ZZ | – | – | – | – | 133000 | 104000 | 14.3 | 3400 | – | 4000 | 117 | 178 | 2.0 | 3.76 | 6221 |
| | 225 | 49 | 3 | 6321 | 6321Z | 6321ZZ | – | – | – | – | 184000 | 153000 | 13.2 | 3000 | – | 3600 | 119 | 211 | 2.5 | 8.05 | 6321 |
| 110 | 140 | 16 | 1 | 6822 | – | – | – | – | – | – | 27300 | 29400 | 16.9 | 4300 | – | 5300 | 115 | 135 | 1.0 | 0.510 | 6822 |
| | 150 | 20 | 1.1 | 6922 | – | – | – | – | – | – | 38000 | 38500 | 16.4 | 4300 | – | 5000 | 116 | 144 | 1.0 | 0.830 | 6922 |
| | 170 | 19 | 1 | 16022 | – | – | – | – | – | – | 44000 | 45000 | 16.5 | 3800 | – | 4500 | 119 | 161 | 1.0 | 1.46 | 16022 |
| | 170 | 28 | 2 | 6022 | 6022Z | 6022ZZ | – | – | – | – | 84500 | 73000 | 15.5 | 3800 | – | 4500 | 118 | 162 | 2.0 | 1.97 | 6022 |
| | 200 | 38 | 2.1 | 6222 | 6222Z | 6222ZZ | – | – | – | – | 144000 | 117000 | 14.3 | 3200 | – | 3800 | 122 | 188 | 2.0 | 4.36 | 6222 |
| | 240 | 50 | 3 | 6322 | 6322Z | 6322ZZ | – | – | – | – | 205000 | 179000 | 13.1 | 2900 | – | 3400 | 124 | 226 | 2.5 | 9.54 | 6322 |

# Deep-groove Ball Bearings

Bore Diameter: 120～170mm

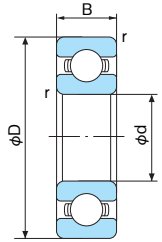


Open type

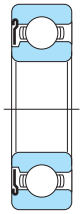

One shield (Z)

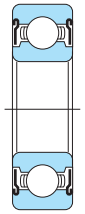

Two shields (ZZ)

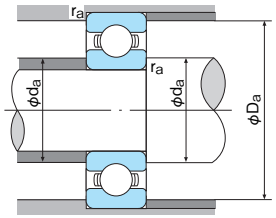


■**Dynamic equivalent radial load**
Pr=XFr+YFa

■**Static equivalent radial load**
Larger value of following to be used:
Por=0.6Fr+0.5Fa
Por=Fr

| $\frac{foFa}{Cor}$ | e | $\frac{Fa}{Fr} \leq e$ | | $\frac{Fa}{Fr} > e$ | |
|---|---|---|---|---|---|
| | | X | Y | X | Y |
| 0.172 | 0.19 | | | | 2.30 |
| 0.345 | 0.22 | 1 | 0 | 0.56 | 1.99 |
| 0.689 | 0.26 | | | | 1.71 |
| 1.03 | 0.28 | | | | 1.55 |
| 1.38 | 0.30 | 1 | 0 | 0.56 | 1.45 |
| 2.07 | 0.34 | | | | 1.31 |
| 3.45 | 0.38 | | | | 1.15 |
| 5.17 | 0.42 | 1 | 0 | 0.56 | 1.04 |
| 6.89 | 0.44 | | | | 1.00 |

1N=0.102kgf

| Boundary dimensions (mm) | | | | Bearing No. | | | | | | | Basic dynamic load rating Cr (N) | Basic static load rating Cor (N) | Factor fo | Limiting speed (min⁻¹) | | | Abutment and fillet dimensions (mm) | | | Mass (kg) | Bearing No. |
|---|---|---|---|---|---|---|---|---|---|---|---|---|---|---|---|---|---|---|---|---|---|
| | | | | | | | | | | | | | | Grease lubrication | | Oil lubrication | | | | | |
| d | D | B | r (min) | Open type | Shield type | | Contact seal type | | Non-contact seal type | | | | | Open type, Z, ZZ | NSL, 2NSL | Open type, Z | da (min) | Da (max) | ra (max) | | |
| 120 | 150 | 16 | 1 | **6824** | — | — | — | — | — | — | 28300 | 31500 | 16.0 | 4000 | — | 4800 | 125 | 145 | 1.0 | 0.549 | **6824** |
| | 165 | 22 | 1.1 | **6924** | — | — | — | — | — | — | 53000 | 54000 | 16.5 | 3800 | — | 4600 | 126 | 159 | 1.0 | 1.13 | **6924** |
| | 180 | 19 | 1 | **16024** | — | — | — | — | — | — | 48000 | 50000 | 16.4 | 3600 | — | 4300 | 129 | 171 | 1.0 | 1.80 | **16024** |
| | 180 | 28 | 2 | **6024** | **6024Z** | **6024ZZ** | — | — | — | — | 88000 | 79500 | 15.7 | 3600 | — | 4300 | 128 | 172 | 2.0 | 2.67 | **6024** |
| | 215 | 40 | 2.1 | **6224** | **6224Z** | **6224ZZ** | — | — | — | — | 145000 | 118000 | 14.4 | 2900 | — | 3400 | 132 | 203 | 2.0 | 5.15 | **6224** |
| | 260 | 55 | 3 | **6324** | **6324Z** | **6324ZZ** | — | — | — | — | 207000 | 185000 | 13.6 | 2600 | — | 3100 | 134 | 246 | 2.5 | 14.6 | **6324** |
| 130 | 165 | 18 | 1.1 | **6826** | — | — | — | — | — | — | 37000 | 41000 | 16.1 | 3700 | — | 4400 | 136 | 158 | 1.0 | 0.790 | **6826** |
| | 180 | 24 | 1.5 | **6926** | — | — | — | — | — | — | 65000 | 67000 | 16.4 | 3500 | — | 4200 | 137 | 173 | 1.5 | 1.78 | **6926** |
| | 200 | 22 | 1.1 | **16026** | — | — | — | — | — | — | 55000 | 59500 | 16.3 | 3200 | — | 3800 | 144 | 186 | 1.0 | 2.69 | **16026** |
| | 200 | 33 | 2 | **6026** | **6026Z** | **6026ZZ** | — | — | — | — | 106000 | 101000 | 15.7 | 3200 | — | 3800 | 138 | 192 | 2.0 | 3.92 | **6026** |
| | 230 | 40 | 3 | **6226** | **6226Z** | **6226ZZ** | — | — | — | — | 167000 | 146000 | 14.5 | 2700 | — | 3200 | 144 | 216 | 2.5 | 5.82 | **6226** |
| | 280 | 58 | 4 | **6326** | **6326Z** | **6326ZZ** | — | — | — | — | 229000 | 214000 | 13.6 | 2400 | — | 2800 | 148 | 262 | 3.0 | 18.2 | **6326** |
| 140 | 175 | 18 | 1.1 | **6828** | — | — | — | — | — | — | 38000 | 44500 | 16.0 | 3400 | — | 4000 | 146 | 169 | 1.0 | 0.840 | **6828** |
| | 190 | 24 | 1.5 | **6928** | — | — | — | — | — | — | 66500 | 71000 | 16.5 | 3200 | — | 3800 | 147 | 183 | 1.5 | 1.90 | **6928** |
| | 210 | 22 | 1.1 | **16028** | — | — | — | — | — | — | 56000 | 62000 | 16.2 | 3000 | — | 3500 | 154 | 196 | 1.0 | 2.86 | **16028** |
| | 210 | 33 | 2 | **6028** | **6028Z** | **6028ZZ** | — | — | — | — | 110000 | 109000 | 15.9 | 3000 | — | 3600 | 148 | 202 | 2.0 | 4.15 | **6028** |
| | 250 | 42 | 3 | **6228** | **6228Z** | **6228ZZ** | — | — | — | — | 166000 | 150000 | 14.8 | 2500 | — | 2900 | 154 | 236 | 2.5 | 7.47 | **6228** |
| | 300 | 62 | 4 | **6328** | **6328Z** | **6328ZZ** | — | — | — | — | 253000 | 246000 | 13.6 | 2200 | — | 2600 | 158 | 282 | 3.0 | 21.8 | **6328** |
| 150 | 190 | 20 | 1.1 | **6830** | — | — | — | — | — | — | 47500 | 54500 | 16.1 | 3200 | — | 3800 | 156 | 184 | 1.0 | 1.20 | **6830** |
| | 210 | 28 | 2 | **6930** | — | — | — | — | — | — | 85500 | 87000 | 16.4 | 3000 | — | 3500 | 158 | 202 | 2.0 | 2.64 | **6930** |
| | 225 | 24 | 1.1 | **16030** | — | — | — | — | — | — | 76500 | 82500 | 16.5 | 2800 | — | 3200 | 164 | 211 | 1.0 | 3.58 | **16030** |
| | 225 | 35 | 2.1 | **6030** | **6030Z** | **6030ZZ** | — | — | — | — | 126000 | 126000 | 15.9 | 2800 | — | 3200 | 159 | 216 | 2.0 | 4.48 | **6030** |
| | 270 | 45 | 3 | **6230** | **6230Z** | **6230ZZ** | — | — | — | — | 176000 | 168000 | 15.2 | 2300 | — | 2700 | 164 | 256 | 2.5 | 9.41 | **6230** |
| | 320 | 65 | 4 | **6330** | — | — | — | — | — | — | 274000 | 284000 | 13.9 | 2100 | — | 2400 | 168 | 302 | 3.0 | 26.2 | **6330** |
| 160 | 200 | 20 | 1.1 | **6832** | — | — | — | — | — | — | 48500 | 56500 | 16.0 | 2900 | — | 3400 | 166 | 194 | 1.0 | 1.30 | **6832** |
| | 220 | 28 | 2 | **6932** | — | — | — | — | — | — | 87500 | 95500 | 16.5 | 2800 | — | 3300 | 168 | 212 | 2.0 | 3.01 | **6932** |
| | 240 | 38 | 2.1 | **6032** | — | — | — | — | — | — | 137000 | 135000 | 15.9 | 2600 | — | 3000 | 169 | 231 | 2.0 | 5.89 | **6032** |
| | 290 | 48 | 3 | **6232** | **6232Z** | **6232ZZ** | — | — | — | — | 185000 | 186000 | 15.4 | 2100 | — | 2500 | 174 | 276 | 2.5 | 14.3 | **6232** |
| | 340 | 68 | 4 | **6332** | — | — | — | — | — | — | 278000 | 287000 | 13.9 | 1900 | — | 2300 | 178 | 322 | 3.0 | 28.6 | **6332** |
| 170 | 215 | 22 | 1.1 | **6834** | — | — | — | — | — | — | 60000 | 70500 | 16.1 | 2700 | — | 3200 | 177 | 208 | 1.0 | 1.85 | **6834** |
| | 230 | 28 | 2 | **6934** | — | — | — | — | — | — | 86000 | 95000 | 16.4 | 2600 | — | 3100 | 178 | 222 | 2.0 | 3.17 | **6934** |
| | 260 | 42 | 2.1 | **6034** | — | — | — | — | — | — | 161000 | 160000 | 15.7 | 2400 | — | 2800 | 179 | 251 | 2.0 | 7.92 | **6034** |
| | 310 | 52 | 4 | **6234** | — | — | — | — | — | — | 212000 | 224000 | 15.3 | 2000 | — | 2400 | 188 | 292 | 3.0 | 17.5 | **6234** |
| | 360 | 72 | 4 | **6334** | — | — | — | — | — | — | 325000 | 355000 | 13.6 | 1800 | — | 2100 | 188 | 342 | 3.0 | 34.0 | **6334** |

# Deep-groove Ball Bearings

Bore Diameter: 180～280mm

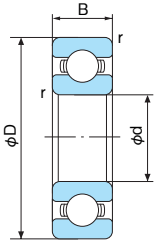


Open type

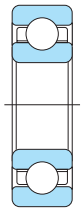

Open type
(Machined cage)

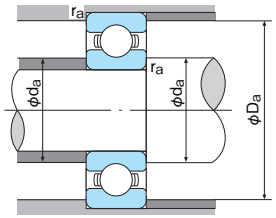


■**Dynamic equivalent radial load**
Pr=XFr+YFa

■**Static equivalent radial load**
Larger value of following to be used:
Por=0.6Fr+0.5Fa
Por=Fr

| $\frac{foFa}{Cor}$ | e | $\frac{Fa}{Fr} \leq e$ | | $\frac{Fa}{Fr} > e$ | |
|---|---|---|---|---|---|
| | | X | Y | X | Y |
| 0.172 | 0.19 | | | | 2.30 |
| 0.345 | 0.22 | 1 | 0 | 0.56 | 1.99 |
| 0.689 | 0.26 | | | | 1.71 |
| 1.03 | 0.28 | | | | 1.55 |
| 1.38 | 0.30 | 1 | 0 | 0.56 | 1.45 |
| 2.07 | 0.34 | | | | 1.31 |
| 3.45 | 0.38 | | | | 1.15 |
| 5.17 | 0.42 | 1 | 0 | 0.56 | 1.04 |
| 6.89 | 0.44 | | | | 1.00 |

1N=0.102kgf

| Boundary dimensions (mm) | | | | Bearing No. | | | | | | | Basic dynamic load rating Cr (N) | Basic static load rating Cor (N) | Factor fo | Limiting speed (min$^{-1}$) | | | Abutment and fillet dimensions (mm) | | | Mass (kg) | Bearing No. |
|---|---|---|---|---|---|---|---|---|---|---|---|---|---|---|---|---|---|---|---|---|---|
| | | | | | | | | | | | | | | Grease lubrication | | Oil lubrication | | | | | |
| d | D | B | r (min) | Open type | Shield type | | Contact seal type | | Non-contact seal type | | | | | Open type | NSL, 2NSL | Open type | da (min) | Da (max) | ra (max) | | |
| 180 | 225 | 22 | 1.1 | **6836** | — | — | — | — | — | — | 60500 | 73000 | 16.0 | 2600 | — | 3000 | 187 | 218 | 1.0 | 2.02 | **6836** |
| | 250 | 33 | 2 | **6936** | — | — | — | — | — | — | 106000 | 117000 | 16.5 | 2400 | — | 2900 | 188 | 242 | 2.0 | 4.68 | **6936** |
| | 280 | 46 | 2.1 | **6036** | — | — | — | — | — | — | 174000 | 180000 | 15.8 | 2300 | — | 2700 | 189 | 271 | 2.0 | 10.3 | **6036** |
| | 320 | 52 | 4 | **6236** | — | — | — | — | — | — | 227000 | 242000 | 15.1 | 1900 | — | 2200 | 198 | 302 | 3.0 | 18.3 | **6236** |
| | 380 | 75 | 4 | **6336** | — | — | — | — | — | — | 325000 | 360000 | 13.9 | 1700 | — | 2000 | 198 | 362 | 3.0 | 41.9 | **6336** |
| 190 | 240 | 24 | 1.5 | **6838** | — | — | — | — | — | — | 73000 | 88000 | 16.1 | 2400 | — | 2900 | 198 | 232 | 1.5 | 2.60 | **6838** |
| | 260 | 33 | 2 | **6938** | — | — | — | — | — | — | 108000 | 123000 | 16.4 | 2300 | — | 2700 | 198 | 252 | 2.0 | 4.90 | **6938** |
| | 290 | 46 | 2.1 | **6038** | — | — | — | — | — | — | 188000 | 200000 | 15.7 | 2100 | — | 2500 | 199 | 281 | 2.0 | 10.8 | **6038** |
| | 340 | 55 | 4 | **6238** | — | — | — | — | — | — | 255000 | 282000 | 15.1 | 1800 | — | 2100 | 208 | 322 | 3.0 | 23.0 | **6238** |
| | 400 | 78 | 5 | **6338** | — | — | — | — | — | — | 355000 | 415000 | 14.1 | 1600 | — | 1900 | 212 | 378 | 4.0 | 48.2 | **6338** |
| 200 | 250 | 24 | 1.5 | **6840** | — | — | — | — | — | — | 74000 | 91000 | 15.9 | 2300 | — | 2700 | 208 | 242 | 1.5 | 2.70 | **6840** |
| | 280 | 38 | 2.1 | **6940** | — | — | — | — | — | — | 130000 | 146000 | 16.5 | 2200 | — | 2600 | 209 | 271 | 2.0 | 6.88 | **6940** |
| | 310 | 51 | 2.1 | **6040** | — | — | — | — | — | — | 202000 | 222000 | 15.8 | 2000 | — | 2400 | 209 | 301 | 2.0 | 13.9 | **6040** |
| | 360 | 58 | 4 | **6240** | — | — | — | — | — | — | 268000 | 310000 | 15.2 | 1700 | — | 2000 | 218 | 342 | 3.0 | 28.2 | **6240** |
| | 420 | 80 | 5 | **6340** | — | — | — | — | — | — | 380000 | 445000 | 13.9 | 1500 | — | 1800 | 222 | 398 | 4.0 | 54.6 | **6340** |
| 220 | 270 | 24 | 1.5 | **6844** | — | — | — | — | — | — | 76500 | 98000 | 15.9 | 2100 | — | 2400 | 228 | 262 | 1.5 | 2.98 | **6844** |
| | 300 | 38 | 2.1 | **6944** | — | — | — | — | — | — | 132000 | 154000 | 16.4 | 2000 | — | 2300 | 229 | 291 | 2.0 | 7.45 | **6944** |
| | 340 | 56 | 3 | **6044** | — | — | — | — | — | — | 214000 | 248000 | 15.9 | 1800 | — | 2200 | 230 | 330 | 2.5 | 18.4 | **6044** |
| | 400 | 65 | 4 | **6244** | — | — | — | — | — | — | 310000 | 375000 | 15.1 | 1500 | — | 1800 | 238 | 382 | 3.0 | 37.0 | **6244** |
| 240 | 300 | 28 | 2 | **6848** | — | — | — | — | — | — | 98500 | 127000 | 15.9 | 1900 | — | 2200 | 250 | 291 | 2.0 | 4.60 | **6848** |
| | 320 | 38 | 2.1 | **6948** | — | — | — | — | — | — | 154000 | 186000 | 16.3 | 1800 | — | 2100 | 249 | 311 | 2.0 | 8.02 | **6948** |
| | 360 | 56 | 3 | **6048** | — | — | — | — | — | — | 222000 | 268000 | 16.1 | 1700 | — | 2000 | 250 | 350 | 2.5 | 19.6 | **6048** |
| | 440 | 72 | 4 | **6248** | — | — | — | — | — | — | 340000 | 430000 | 15.2 | 1200 | — | 1500 | 258 | 322 | 3.0 | 49.9 | **6248** |
| 260 | 320 | 28 | 2 | **6852** | — | — | — | — | — | — | 101000 | 136000 | 15.8 | 1700 | — | 2000 | 269 | 311 | 2.0 | 4.95 | **6852** |
| | 360 | 46 | 2.1 | **6952** | — | — | — | — | — | — | 204000 | 254000 | 16.4 | 1600 | — | 1900 | 269 | 351 | 2.0 | 13.4 | **6952** |
| | 400 | 65 | 4 | **6052** | — | — | — | — | — | — | 252000 | 320000 | 16.1 | 1500 | — | 1800 | 272 | 388 | 3.0 | 29.3 | **6052** |
| | 480 | 80 | 5 | **6252** | — | — | — | — | — | — | 400000 | 540000 | 15.1 | 1100 | — | 1400 | 282 | 458 | 4.0 | 67.5 | **6252** |
| 280 | 350 | 33 | 2 | **6856** | — | — | — | — | — | — | 133000 | 177000 | 16.1 | 1600 | — | 1900 | 290 | 341 | 2.0 | 7.35 | **6856** |
| | 380 | 46 | 2.1 | **6956** | — | — | — | — | — | — | 209000 | 270000 | 16.3 | 1500 | — | 1800 | 289 | 371 | 2.0 | 14.3 | **6956** |
| | 420 | 65 | 4 | **6056** | — | — | — | — | — | — | 266000 | 350000 | 16.1 | 1400 | — | 1600 | 293 | 405 | 3.0 | 31.0 | **6056** |
| | 500 | 80 | 5 | **6256** | — | — | — | — | — | — | 400000 | 550000 | 15.3 | 1000 | — | 1300 | 302 | 478 | 4.0 | 71.0 | **6256** |

# Deep-groove Ball Bearings

Bore Diameter: 300～320mm

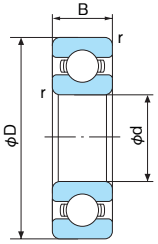


Open type

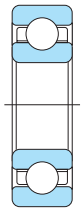

Open type
(Machined cage)

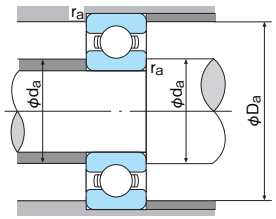


**■Dynamic equivalent radial load**
Pr=XFr+YFa

**■Static equivalent radial load**
Larger value of following to be used:
Por=0.6Fr+0.5Fa
Por=Fr

| $\frac{foFa}{Cor}$ | e | $\frac{Fa}{Fr} \leq e$ | | $\frac{Fa}{Fr} > e$ | |
|---|---|---|---|---|---|
| | | X | Y | X | Y |
| 0.172 | 0.19 | | | | 2.30 |
| 0.345 | 0.22 | 1 | 0 | 0.56 | 1.99 |
| 0.689 | 0.26 | | | | 1.71 |
| 1.03 | 0.28 | | | | 1.55 |
| 1.38 | 0.30 | 1 | 0 | 0.56 | 1.45 |
| 2.07 | 0.34 | | | | 1.31 |
| 3.45 | 0.38 | | | | 1.15 |
| 5.17 | 0.42 | 1 | 0 | 0.56 | 1.04 |
| 6.89 | 0.44 | | | | 1.00 |

1N=0.102kgf

| Boundary dimensions (mm) | | | | Bearing No. | | | | | | | Basic dynamic load rating Cr (N) | Basic static load rating Cor (N) | Factor fo | Limiting speed ($min^{-1}$) | | | Abutment and fillet dimensions (mm) | | | Mass (kg) | Bearing No. |
|---|---|---|---|---|---|---|---|---|---|---|---|---|---|---|---|---|---|---|---|---|---|
| | | | | | | | | | | | | | | Grease lubrication | | Oil lubrication | | | | | |
| d | D | B | r (min) | Open type | Shield type | | Contact seal type | | Non-contact seal type | | | | | Open type | NSL, 2NSL | Open type | da (min) | Da (max) | ra (max) | | |
| 300 | 380 | 38 | 2.1 | **6860** | — | — | — | — | — | — | 166000 | 219000 | 16.0 | 1500 | — | 1700 | 311 | 369 | 2.0 | 10.4 | **6860** |
| | 420 | 56 | 3 | **6960** | — | — | — | — | — | — | 269000 | 370000 | 16.5 | 1400 | — | 1600 | 311 | 409 | 2.5 | 22.8 | **6960** |
| | 460 | 74 | 4 | **6060** | — | — | — | — | — | — | 355000 | 490000 | 15.0 | 1300 | — | 1500 | 313 | 447 | 3.0 | 43.8 | **6060** |
| | 540 | 85 | 5 | **6260** | — | — | — | — | — | — | 465000 | 670000 | 15.2 | 950 | — | 1200 | 322 | 518 | 4.0 | 88.6 | **6260** |
| 320 | 400 | 38 | 2.1 | **6864** | — | — | — | — | — | — | 164000 | 218000 | 15.9 | 1400 | — | 1600 | 330 | 389 | 2.0 | 10.9 | **6864** |
| | 440 | 56 | 3 | **6964** | — | — | — | — | — | — | 266000 | 370000 | 16.4 | 1300 | — | 1500 | 331 | 429 | 2.5 | 24.1 | **6964** |
| | 480 | 74 | 4 | **6064** | — | — | — | — | — | — | 340000 | 470000 | 15.3 | 1200 | — | 1400 | 333 | 467 | 3.0 | 46.1 | **6064** |

# Deep-groove Ball Bearings

## With snap ring groove / With snap ring / Shield type with snap ring

Bore Diameter: 10～30mm

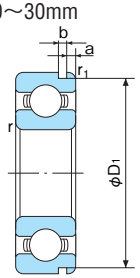


With snap ring groove (N)

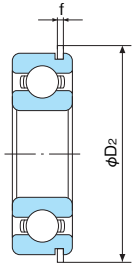


With snap ring (NR)

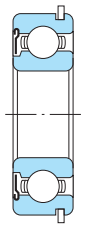

Shield type with snap ring (ZNR)

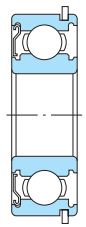

Shield type with snap ring (ZENR)

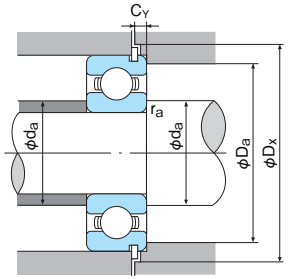


**■Dynamic equivalent radial load**
Pr=XFr+YFa

**■Static equivalent radial load**
Larger value of following to be used:
Por=0.6Fr+0.5Fa
Por=Fr

| $\frac{foFa}{Cor}$ | e | $\frac{Fa}{Fr} \leqq e$ | | $\frac{Fa}{Fr} > e$ | |
|---|---|---|---|---|---|
| | | X | Y | X | Y |
| 0.172 | 0.19 | | | | 2.30 |
| 0.345 | 0.22 | 1 | 0 | 0.56 | 1.99 |
| 0.689 | 0.26 | | | | 1.71 |
| 1.03 | 0.28 | | | | 1.55 |
| 1.38 | 0.30 | 1 | 0 | 0.56 | 1.45 |
| 2.07 | 0.34 | | | | 1.31 |
| 3.45 | 0.38 | | | | 1.15 |
| 5.17 | 0.42 | 1 | 0 | 0.56 | 1.04 |
| 6.89 | 0.44 | | | | 1.00 |

1N=0.102kgf

| Boundary dimensions (mm) | | | | | Dimensions of snap ring groove and snap ring (mm) | | | | | Bearing No.(1) | | | Basic dynamic load rating Cr (N) | Basic static load rating Cor (N) | Factor fo | Limiting speed (min-1) | | Abutment and fillet dimensions (mm) | | | | | Mass (kg) | Bearing No. |
|---|---|---|---|---|---|---|---|---|---|---|---|---|---|---|---|---|---|---|---|---|---|---|---|---|
| d | D | B | r (min) | r1 (min) | D1 (max) | a (max) | b (min) | D2 (max) | f (max) | | | | | | | Grease lubrication | Oil lubrication | da (min) | Da (max) | Dx (min) | ra (max) | CY (max) | | |
| 10 | 22 | 6 | 0.3 | 0.3 | 20.8 | 1.05 | 0.8 | 24.8 | 0.7 | 6900N | 6900NR | 6900ZENR | 2490 | 1130 | 14.0 | 33000 | 38000 | 12 | 20 | 25.5 | 0.3 | 1.5 | 0.010 | 6900N |
| | 30 | 9 | 0.6 | 0.5 | 28.17 | 2.06 | 1.35 | 34.7 | 1.12 | 6200N | 6200NR | 6200ZENR | 5100 | 2390 | 13.2 | 25000 | 30000 | 15 | 25 | 35.5 | 0.6 | 2.9 | 0.032 | 6200N |
| | 35 | 11 | 0.6 | 0.5 | 33.17 | 2.06 | 1.35 | 39.7 | 1.12 | 6300N | 6300NR | 6300ZENR | 8100 | 3450 | 11.3 | 23000 | 27000 | 15 | 30 | 40.5 | 0.6 | 2.9 | 0.053 | 6300N |
| 12 | 24 | 6 | 0.3 | 0.3 | 22.8 | 1.05 | 0.8 | 26.8 | 0.7 | 6901N | 6901NR | 6901ZENR | 2700 | 1320 | 14.5 | 30000 | 36000 | 14 | 22 | 27.5 | 0.3 | 1.5 | 0.012 | 6901N |
| | 28 | 8 | 0.3 | 0.3 | 26.7 | 1.35 | 0.93 | 31 | 0.85 | 6001N | 6001NR | 6001ZENR | 5100 | 2390 | 13.5 | 28000 | 32000 | 14 | 26 | 31.5 | 0.3 | 1.9 | 0.024 | 6001N |
| | 32 | 10 | 0.6 | 0.5 | 30.15 | 2.06 | 1.35 | 36.7 | 1.12 | 6201N | 6201NR | 6201ZENR | 6800 | 3050 | 12.3 | 22000 | 28000 | 17 | 27 | 37.5 | 0.6 | 2.9 | 0.037 | 6201N |
| | 37 | 12 | 1 | 0.5 | 34.77 | 2.06 | 1.35 | 41.3 | 1.12 | 6301N | 6301NR | 6301ZENR | 9750 | 4250 | 11.2 | 20000 | 24000 | 18 | 31 | 42 | 1 | 2.9 | 0.060 | 6301N |
| 15 | 28 | 7 | 0.3 | 0.3 | 26.7 | 1.3 | 0.95 | 30.8 | 0.85 | 6902N | 6902NR | 6902ZENR | 4300 | 2250 | 14.3 | 26000 | 31000 | 17 | 26 | 31.5 | 0.3 | 1.8 | 0.017 | 6902N |
| | 32 | 9 | 0.3 | 0.3 | 30.15 | 2.06 | 1.35 | 36.7 | 1.12 | 6002N | 6002NR | 6002ZENR | 5600 | 2840 | 13.9 | 24000 | 28000 | 17 | 30 | 37.5 | 0.3 | 2.9 | 0.033 | 6002N |
| | 35 | 11 | 0.6 | 0.5 | 33.17 | 2.06 | 1.35 | 39.7 | 1.12 | 6202N | 6202NR | 6202ZENR | 7650 | 3700 | 13.1 | 20000 | 24000 | 20 | 30 | 40.5 | 0.6 | 2.9 | 0.045 | 6202N |
| | 42 | 13 | 1 | 0.5 | 39.75 | 2.06 | 1.35 | 46.3 | 1.12 | 6302N | 6302NR | 6302ZENR | 11400 | 5400 | 12.3 | 17000 | 21000 | 21 | 36 | 47 | 1 | 2.9 | 0.082 | 6302N |
| 17 | 30 | 7 | 0.3 | 0.3 | 28.7 | 1.3 | 0.95 | 32.8 | 0.85 | 6903N | 6903NR | 6903ZENR | 4600 | 2550 | 14.7 | 24000 | 29000 | 19 | 28 | 33.5 | 0.3 | 1.8 | 0.019 | 6903N |
| | 35 | 10 | 0.3 | 0.3 | 33.17 | 2.06 | 1.35 | 39.7 | 1.12 | 6003N | 6003NR | 6003ZENR | 6000 | 3250 | 14.3 | 22000 | 26000 | 19 | 33 | 40.5 | 0.3 | 2.9 | 0.041 | 6003N |
| | 40 | 12 | 0.6 | 0.5 | 38.1 | 2.06 | 1.35 | 44.6 | 1.12 | 6203N | 6203NR | 6203ZENR | 9550 | 4800 | 13.1 | 18000 | 21000 | 22 | 35 | 45.5 | 0.6 | 2.9 | 0.065 | 6203N |
| | 47 | 14 | 1 | 0.5 | 44.6 | 2.46 | 1.35 | 52.7 | 1.12 | 6303N | 6303NR | 6303ZENR | 13600 | 6550 | 12.3 | 16000 | 19000 | 23 | 41 | 53.5 | 1 | 3.3 | 0.115 | 6303N |
| 20 | 32 | 7 | 0.3 | 0.3 | 30.7 | 1.3 | 0.95 | 34.8 | 0.85 | 6804N | 6804NR | 6804ZENR | 4000 | 2640 | 15.5 | 22000 | 26000 | 22 | 30 | 35.5 | 0.3 | 1.8 | 0.020 | 6804N |
| | 37 | 9 | 0.3 | 0.3 | 35.7 | 1.7 | 0.95 | 39.8 | 0.85 | 6904N | 6904NR | 6904ZENR | 6350 | 3700 | 14.8 | 19000 | 23000 | 22 | 35 | 40.5 | 0.3 | 2.3 | 0.037 | 6904N |
| | 42 | 12 | 0.6 | 0.5 | 39.75 | 2.06 | 1.35 | 46.3 | 1.12 | 6004N | 6004NR | 6004ZENR | 9400 | 5000 | 13.9 | 18000 | 21000 | 24 | 38 | 47 | 0.6 | 2.9 | 0.069 | 6004N |
| | 47 | 14 | 1 | 0.5 | 44.6 | 2.46 | 1.35 | 52.7 | 1.12 | 6204N | 6204NR | 6204ZENR | 12800 | 6600 | 13.1 | 16000 | 18000 | 26 | 41 | 53.5 | 1 | 3.3 | 0.106 | 6204N |
| | 52 | 15 | 1.1 | 0.5 | 49.73 | 2.46 | 1.35 | 57.9 | 1.12 | 6304N | 6304NR | 6304ZENR | 15900 | 7900 | 12.4 | 14000 | 17000 | 27 | 45 | 58.5 | 1 | 3.3 | 0.144 | 6304N |
| 22 | 50 | 14 | 1 | 0.5 | 47.6 | 2.46 | 1.35 | 55.7 | 1.12 | 62/22N | 62/22NR | 62/22ZNR | 13900 | 6950 | 13.1 | 14000 | 17000 | 28 | 44 | 56.5 | 1 | 3.3 | 0.120 | 62/22N |
| | 56 | 16 | 1.1 | 0.5 | 53.6 | 2.46 | 1.35 | 61.7 | 1.12 | 63/22N | 63/22NR | 63/22ZNR | 18400 | 9250 | 12.4 | 13000 | 16000 | 29 | 49 | 62.5 | 1 | 3.3 | 0.176 | 63/22N |
| 25 | 37 | 7 | 0.3 | 0.3 | 35.7 | 1.3 | 0.95 | 39.8 | 0.85 | 6805N | 6805NR | 6805ZENR | 4300 | 2940 | 16.0 | 18000 | 22000 | 27 | 35 | 40.5 | 0.3 | 1.8 | 0.023 | 6805N |
| | 42 | 9 | 0.3 | 0.3 | 40.7 | 1.7 | 0.95 | 44.8 | 0.85 | 6905N | 6905NR | 6905ZENR | 7000 | 4500 | 15.3 | 16000 | 20000 | 27 | 40 | 45.5 | 0.3 | 2.3 | 0.044 | 6905N |
| | 47 | 12 | 0.6 | 0.5 | 44.6 | 2.06 | 1.35 | 52.7 | 1.12 | 6005N | 6005NR | 6005ZENR | 10100 | 5850 | 14.5 | 15000 | 18000 | 29 | 43 | 53.5 | 0.6 | 2.9 | 0.078 | 6005N |
| | 52 | 15 | 1 | 0.5 | 49.73 | 2.46 | 1.35 | 57.9 | 1.12 | 6205N | 6205NR | 6205ZENR | 14000 | 7900 | 13.9 | 13000 | 16000 | 31 | 46 | 58.5 | 1 | 3.3 | 0.128 | 6205N |
| | 62 | 17 | 1.1 | 0.5 | 59.61 | 3.28 | 1.9 | 67.7 | 1.7 | 6305N | 6305NR | 6305ZENR | 23600 | 12100 | 12.2 | 12000 | 14000 | 32 | 55 | 68.5 | 1 | 4.6 | 0.232 | 6305N |
| 28 | 58 | 16 | 1 | 0.5 | 55.6 | 2.46 | 1.35 | 63.7 | 1.12 | 62/28N | 62/28NR | 62/28ZENR | 17900 | 9750 | 13.1 | 12000 | 14000 | 34 | 52 | 64.5 | 1 | 3.3 | 0.175 | 62/28N |
| | 68 | 18 | 1.1 | 0.5 | 64.82 | 3.28 | 1.9 | 74.6 | 1.7 | 63/28N | 63/28NR | 63/28ZNR | 26800 | 14000 | 12.4 | 11000 | 13000 | 35 | 61 | 76 | 1 | 4.6 | 0.287 | 63/28N |
| 30 | 42 | 7 | 0.3 | 0.3 | 40.7 | 1.3 | 0.95 | 44.8 | 0.85 | 6806N | 6806NR | 6806ZENR | 5350 | 3800 | 16.4 | 15000 | 18000 | 32 | 40 | 45.5 | 0.3 | 1.8 | 0.027 | 6806N |
| | 47 | 9 | 0.3 | 0.3 | 45.7 | 1.7 | 0.95 | 49.8 | 0.85 | 6906N | 6906NR | 6906ZENR | 7250 | 5000 | 15.8 | 14000 | 17000 | 32 | 45 | 50.5 | 0.3 | 2.3 | 0.047 | 6906N |
| | 55 | 13 | 1 | 0.5 | 52.6 | 2.08 | 1.35 | 60.7 | 1.12 | 6006N | 6006NR | 6006ZENR | 13200 | 8300 | 14.8 | 13000 | 15000 | 35 | 50 | 61.5 | 1 | 2.9 | 0.113 | 6006N |
| | 62 | 16 | 1 | 0.5 | 59.61 | 3.28 | 1.9 | 67.7 | 1.7 | 6206N | 6206NR | 6206ZENR | 19500 | 11300 | 13.9 | 11000 | 13000 | 36 | 56 | 68.5 | 1 | 4.6 | 0.199 | 6206N |
| | 72 | 19 | 1.1 | 0.5 | 68.81 | 3.28 | 1.9 | 78.6 | 1.7 | 6306N | 6306NR | 6306ZENR | 26700 | 15000 | 13.2 | 10000 | 12000 | 37 | 65 | 80 | 1 | 4.6 | 0.346 | 6306N |

Note: (1) Bearing No. ZE means one shield type, two shields type is also available.
Remark: Dimensions of snap ring groove and snap ring are shown on pages 45 to 48.

# Deep-groove Ball Bearings

## With snap ring groove / With snap ring / Shield type with snap ring

Bore Diameter: 32～60mm

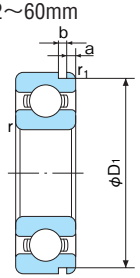


With snap ring groove (N)

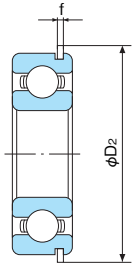


With snap ring (NR)

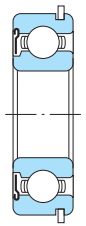

Shield type with snap ring (ZNR)

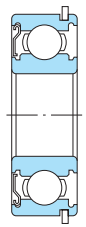

Shield type with snap ring (ZENR)

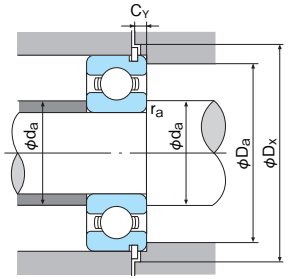


**■Dynamic equivalent radial load**
Pr=XFr+YFa

**■Static equivalent radial load**
Larger value of following to be used:
Por=0.6Fr+0.5Fa
Por=Fr

| $\frac{f_0 Fa}{Cor}$ | e | $\frac{Fa}{Fr} \leqq e$ | | $\frac{Fa}{Fr} > e$ | |
|---|---|---|---|---|---|
| | | X | Y | X | Y |
| 0.172 | 0.19 | | | | 2.30 |
| 0.345 | 0.22 | 1 | 0 | 0.56 | 1.99 |
| 0.689 | 0.26 | | | | 1.71 |
| 1.03 | 0.28 | | | | 1.55 |
| 1.38 | 0.30 | 1 | 0 | 0.56 | 1.45 |
| 2.07 | 0.34 | | | | 1.31 |
| 3.45 | 0.38 | | | | 1.15 |
| 5.17 | 0.42 | 1 | 0 | 0.56 | 1.04 |
| 6.89 | 0.44 | | | | 1.00 |

1N=0.102kgf

| Boundary dimensions (mm) | | | | | Dimensions of snap ring groove and snap ring (mm) | | | | | Bearing No.(1) | | | Basic dynamic load rating Cr (N) | Basic static load rating Cor (N) | Factor fo | Limiting speed (min-1) | | Abutment and fillet dimensions (mm) | | | | | Mass (kg) | Bearing No. |
|---|---|---|---|---|---|---|---|---|---|---|---|---|---|---|---|---|---|---|---|---|---|---|---|---|
| d | D | B | r (min) | r1 (min) | D1 (max) | a (max) | b (min) | D2 (max) | f (max) | | | | | | | Grease lubrication | Oil lubrication | da (min) | Da (max) | Dx (min) | ra (max) | CY (max) | | |
| 32 | 65 | 17 | 1 | 0.5 | 62.6 | 3.28 | 1.9 | 70.7 | 1.7 | 62/32N | 62/32NR | 62/32ZNR | 22400 | 13100 | 13.6 | 11000 | 12000 | 38 | 59 | 71.5 | 1 | 4.6 | 0.230 | 62/32N |
| | 75 | 20 | 1.1 | 0.5 | 71.83 | 3.28 | 1.9 | 81.6 | 1.7 | 63/32N | 63/32NR | 63/32ZNR | 30000 | 16200 | 12.7 | 9500 | 11000 | 39 | 68 | 83 | 1 | 4.6 | 0.382 | 63/32N |
| 35 | 47 | 7 | 0.3 | 0.3 | 45.7 | 1.3 | 0.95 | 49.8 | 0.85 | 6807N | 6807NR | 6807ZENR | 4750 | 3800 | 16.4 | 14000 | 16000 | 37 | 45 | 50.5 | 0.3 | 1.8 | 0.030 | 6807N |
| | 55 | 10 | 0.6 | 0.5 | 53.7 | 1.7 | 0.95 | 57.8 | 0.85 | 6907N | 6907NR | 6907ZENR | 10400 | 7150 | 15.6 | 12000 | 15000 | 39 | 51 | 58.5 | 0.6 | 2.3 | 0.075 | 6907N |
| | 62 | 14 | 1 | 0.5 | 59.61 | 2.08 | 1.9 | 67.7 | 1.7 | 6007N | 6007NR | 6007ZENR | 16000 | 10300 | 14.8 | 12000 | 14000 | 40 | 57 | 68.5 | 1 | 3.4 | 0.150 | 6007N |
| | 72 | 17 | 1.1 | 0.5 | 68.81 | 3.28 | 1.9 | 78.6 | 1.6 | 6207N | 6207NR | 6207ZENR | 25700 | 15300 | 13.8 | 9800 | 11000 | 42 | 65 | 80 | 1 | 4.6 | 0.288 | 6207N |
| | 80 | 21 | 1.5 | 0.5 | 76.81 | 3.28 | 1.9 | 86.6 | 1.6 | 6307N | 6307NR | 6307ZENR | 33500 | 19100 | 13.2 | 8800 | 10000 | 44 | 71 | 88 | 1.5 | 4.6 | 0.457 | 6307N |
| 40 | 52 | 7 | 0.3 | 0.3 | 50.7 | 1.3 | 0.95 | 54.8 | 0.85 | 6808N | 6808NR | 6808ZENR | 5950 | 4900 | 16.2 | 12000 | 14000 | 42 | 50 | 55.5 | 0.3 | 1.8 | 0.034 | 6808N |
| | 62 | 12 | 0.6 | 0.5 | 60.7 | 1.7 | 0.95 | 64.8 | 0.85 | 6908N | 6908NR | 6908ZENR | 13700 | 9950 | 15.8 | 11000 | 13000 | 44 | 58 | 65.5 | 0.6 | 2.3 | 0.110 | 6908N |
| | 68 | 15 | 1 | 0.5 | 64.82 | 2.49 | 1.9 | 74.6 | 1.7 | 6008N | 6008NR | 6008ZENR | 16800 | 11500 | 15.3 | 10000 | 12000 | 45 | 63 | 76 | 1 | 3.8 | 0.186 | 6008N |
| | 80 | 18 | 1.1 | 0.5 | 76.81 | 3.28 | 1.9 | 86.6 | 1.7 | 6208N | 6208NR | 6208ZENR | 29100 | 17900 | 14.0 | 8700 | 10000 | 47 | 73 | 88 | 1 | 4.6 | 0.366 | 6208N |
| | 90 | 23 | 1.5 | 0.5 | 86.79 | 3.28 | 2.7 | 96.5 | 2.46 | 6308N | 6308NR | 6308ZENR | 40500 | 24100 | 13.2 | 7800 | 9200 | 49 | 81 | 98 | 1.5 | 5.9 | 0.633 | 6308N |
| 45 | 58 | 7 | 0.3 | 0.3 | 56.7 | 1.3 | 0.95 | 60.8 | 0.85 | 6809N | 6809NR | 6809ZENR | 5350 | 4900 | 16.1 | 11000 | 13000 | 47 | 56 | 61.5 | 0.3 | 1.8 | 0.042 | 6809N |
| | 68 | 12 | 0.6 | 0.5 | 66.7 | 1.7 | 0.95 | 70.8 | 0.85 | 6909N | 6909NR | 6909ZENR | 14100 | 10900 | 16.1 | 10000 | 12000 | 49 | 64 | 72 | 0.6 | 2.3 | 0.124 | 6909N |
| | 75 | 16 | 1 | 0.5 | 71.83 | 2.49 | 1.9 | 81.6 | 1.7 | 6009N | 6009NR | 6009ZENR | 20900 | 15200 | 15.3 | 9200 | 11000 | 50 | 70 | 83 | 1 | 3.8 | 0.239 | 6009N |
| | 85 | 19 | 1.1 | 0.5 | 81.81 | 3.28 | 1.9 | 91.6 | 1.7 | 6209N | 6209NR | 6209ZENR | 32500 | 20500 | 14.1 | 7800 | 9300 | 52 | 78 | 93 | 1 | 4.6 | 0.407 | 6209N |
| | 100 | 25 | 1.5 | 0.5 | 96.8 | 3.28 | 2.7 | 106.5 | 2.46 | 6309N | 6309NR | 6309ZENR | 53000 | 32000 | 13.1 | 7000 | 8200 | 54 | 91 | 108 | 1.5 | 5.4 | 0.833 | 6309N |
| 50 | 65 | 7 | 0.3 | 0.3 | 63.7 | 1.3 | 0.95 | 67.8 | 0.85 | 6810N | 6810NR | 6810ZENR | 6400 | 5800 | 16.1 | 10000 | 12000 | 52 | 63 | 68.5 | 0.3 | 1.8 | 0.054 | 6810N |
| | 72 | 12 | 0.6 | 0.5 | 70.7 | 1.7 | 0.95 | 74.8 | 0.85 | 6910N | 6910NR | 6910ZENR | 14500 | 11700 | 16.1 | 9500 | 11000 | 54 | 68 | 76 | 0.6 | 2.3 | 0.127 | 6910N |
| | 80 | 16 | 1 | 0.5 | 76.81 | 2.49 | 1.9 | 86.6 | 1.7 | 6010N | 6010NR | 6010ZENR | 21800 | 16600 | 15.6 | 8500 | 10000 | 55 | 75 | 88 | 1 | 3.8 | 0.252 | 6010N |
| | 90 | 20 | 1.1 | 0.5 | 86.79 | 3.28 | 2.7 | 96.5 | 2.46 | 6210N | 6210NR | 6210ZENR | 35000 | 23200 | 14.4 | 7100 | 8600 | 57 | 83 | 98 | 1 | 5.4 | 0.463 | 6210N |
| | 110 | 27 | 2 | 0.5 | 106.81 | 3.28 | 2.7 | 116.6 | 2.46 | 6310N | 6310NR | 6310ZENR | 62000 | 38100 | 13.1 | 6400 | 7500 | 60 | 100 | 118 | 2 | 5.4 | 1.07 | 6310N |
| 55 | 72 | 9 | 0.3 | 0.3 | 70.7 | 1.7 | 0.95 | 74.8 | 0.85 | 6811N | 6811NR | 6811ZNR | 8800 | 8100 | 16.2 | 8700 | 10000 | 57 | 70 | 76 | 0.3 | 2.3 | 0.085 | 6811N |
| | 80 | 13 | 1 | 0.5 | 77.9 | 2.1 | 1.3 | 84.4 | 1.12 | 6911N | 6911NR | 6911ZNR | 16000 | 13200 | 16.2 | 8200 | 9600 | 60 | 75 | 86 | 1 | 2.9 | 0.180 | 6911N |
| | 90 | 18 | 1.1 | 0.5 | 86.79 | 2.87 | 2.7 | 96.5 | 2.46 | 6011N | 6011NR | 6011ZENR | 28300 | 21300 | 15.4 | 7700 | 9000 | 61 | 84 | 98 | 1 | 5 | 0.375 | 6011N |
| | 100 | 21 | 1.5 | 0.5 | 96.8 | 3.28 | 2.7 | 106.5 | 2.46 | 6211N | 6211NR | 6211ZENR | 43500 | 29300 | 14.4 | 6400 | 7700 | 64 | 91 | 108 | 1.5 | 5.4 | 0.607 | 6211N |
| | 120 | 29 | 2 | 0.5 | 115.21 | 4.06 | 3.1 | 129.7 | 2.82 | 6311N | 6311NR | 6311ZENR | 71500 | 44500 | 13.1 | 5800 | 6800 | 65 | 110 | 131.5 | 2 | 6.5 | 1.37 | 6311N |
| 60 | 78 | 10 | 0.3 | 0.3 | 76.2 | 1.7 | 1.3 | 82.7 | 1.12 | 6812N | 6812NR | 6812ZNR | 11500 | 10600 | 16.3 | 8000 | 9500 | 62 | 76 | 84 | 0.3 | 2.5 | 0.110 | 6812N |
| | 85 | 13 | 1 | 0.5 | 82.9 | 2.1 | 1.3 | 89.4 | 1.12 | 6912N | 6912NR | 6912ZNR | 15200 | 13500 | 16.5 | 7600 | 9000 | 65 | 80 | 91 | 1 | 2.9 | 0.195 | 6912N |
| | 95 | 18 | 1.1 | 0.5 | 91.82 | 2.87 | 2.7 | 101.6 | 2.46 | 6012N | 6012NR | 6012ZENR | 29400 | 23200 | 15.5 | 7100 | 8500 | 66 | 89 | 103 | 1 | 5 | 0.403 | 6012N |
| | 110 | 22 | 1.5 | 0.5 | 106.81 | 3.28 | 2.7 | 116.6 | 2.46 | 6212N | 6212NR | 6212ZENR | 52500 | 36000 | 14.3 | 6000 | 7100 | 69 | 101 | 118 | 1.5 | 5.4 | 0.783 | 6212N |
| | 130 | 31 | 2.1 | 0.5 | 125.22 | 4.06 | 3.1 | 139.7 | 2.82 | 6312N | 6312NR | 6312ZENR | 82000 | 52000 | 13.2 | 5400 | 6300 | 72 | 118 | 141.5 | 2 | 6.5 | 1.70 | 6312N |

Note: (1) Bearing No. ZE means one shield type, two shields type is also available.
Remark: Dimensions of snap ring groove and snap ring are shown on pages 45 to 48.

# Deep-groove Ball Bearings

## With snap ring groove / With snap ring / Shield type with snap ring

Bore Diameter: 65～90mm

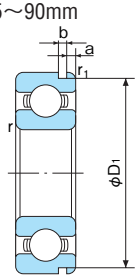


With snap ring groove (N)

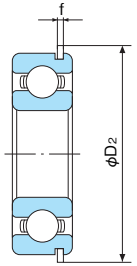


With snap ring (NR)

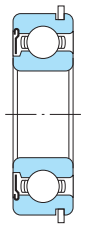

Shield type with snap ring (ZNR)

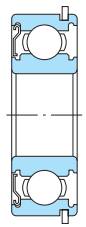

Shield type with snap ring (ZENR)

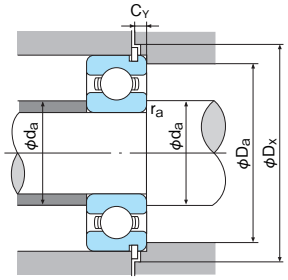


**■Dynamic equivalent radial load**
Pr=XFr+YFa

**■Static equivalent radial load**
Larger value of following to be used:
Por=0.6Fr+0.5Fa
Por=Fr

| $\frac{foFa}{Cor}$ | e | $\frac{Fa}{Fr} \leq e$ | | $\frac{Fa}{Fr} > e$ | |
|---|---|---|---|---|---|
| | | X | Y | X | Y |
| 0.172 | 0.19 | | | | 2.30 |
| 0.345 | 0.22 | 1 | 0 | 0.56 | 1.99 |
| 0.689 | 0.26 | | | | 1.71 |
| 1.03 | 0.28 | | | | 1.55 |
| 1.38 | 0.30 | 1 | 0 | 0.56 | 1.45 |
| 2.07 | 0.34 | | | | 1.31 |
| 3.45 | 0.38 | | | | 1.15 |
| 5.17 | 0.42 | 1 | 0 | 0.56 | 1.04 |
| 6.89 | 0.44 | | | | 1.00 |

1N=0.102kgf

| Boundary dimensions (mm) | | | | | Dimensions of snap ring groove and snap ring (mm) | | | | | Bearing No.(1) | | | Basic dynamic load rating Cr (N) | Basic static load rating Cor (N) | Factor fo | Limiting speed (min-1) | | Abutment and fillet dimensions (mm) | | | | | Mass (kg) | Bearing No. |
|---|---|---|---|---|---|---|---|---|---|---|---|---|---|---|---|---|---|---|---|---|---|---|---|---|
| d | D | B | r (min) | r1 (min) | D1 (max) | a (max) | b (min) | D2 (max) | f (max) | | | | | | | Grease lubrication | Oil lubrication | da (min) | Da (max) | Dx (min) | ra (max) | CY (max) | | |
| 65 | 85 | 10 | 0.6 | 0.5 | 82.9 | 1.7 | 1.3 | 89.4 | 1.12 | **6813N** | **6813NR** | **6816ZNR** | 11900 | 11500 | 16.2 | 7500 | 8700 | 69 | 81 | 91 | 0.6 | 2.5 | 0.130 | **6813N** |
| | 90 | 13 | 1 | 0.5 | 87.9 | 2.1 | 1.3 | 94.4 | 1.12 | **6913N** | **6913NR** | **6913ZNR** | 17400 | 16000 | 16.5 | 7100 | 8500 | 70 | 85 | 96 | 1 | 2.9 | 0.210 | **6913N** |
| | 100 | 18 | 1.1 | 0.5 | 96.8 | 2.87 | 2.7 | 106.5 | 2.46 | **6013N** | **6013NR** | **6013ZENR** | 30500 | 25200 | 15.7 | 6700 | 8000 | 71 | 94 | 108 | 1 | 5 | 0.413 | **6013N** |
| | 120 | 23 | 1.5 | 0.5 | 115.21 | 4.06 | 3.1 | 129.7 | 2.82 | **6213N** | **6213NR** | **6213ZENR** | 57000 | 40000 | 14.4 | 5500 | 6500 | 74 | 111 | 131.5 | 1.5 | 6.5 | 0.990 | **6213N** |
| | 140 | 33 | 2.1 | 0.5 | 135.23 | 4.9 | 3.1 | 149.7 | 2.82 | **6313N** | **6313NR** | **6313ZENR** | 92500 | 59500 | 13.2 | 4900 | 6000 | 77 | 128 | 152 | 2 | 7.3 | 2.08 | **6313N** |
| 70 | 90 | 10 | 0.6 | 0.5 | 87.9 | 1.7 | 1.3 | 94.4 | 1.12 | **6814N** | **6814NR** | **6814ZNR** | 12100 | 11900 | 16.1 | 7000 | 8100 | 74 | 86 | 96 | 0.6 | 2.5 | 0.140 | **6814N** |
| | 100 | 16 | 1 | 0.5 | 97.9 | 2.5 | 1.3 | 104.4 | 1.12 | **6914N** | **6914NR** | **6914ZNR** | 23700 | 21100 | 16.3 | 6500 | 7700 | 75 | 95 | 106 | 1 | 3.3 | 0.332 | **6914N** |
| | 110 | 20 | 1.1 | 0.5 | 106.81 | 2.87 | 2.7 | 116.6 | 2.46 | **6014N** | **6014NR** | **6014ZENR** | 38000 | 31000 | 15.6 | 6100 | 7100 | 76 | 104 | 118 | 1 | 5 | 0.580 | **6014N** |
| | 125 | 24 | 1.5 | 0.5 | 120.22 | 4.06 | 3.1 | 134.7 | 2.82 | **6214N** | **6214NR** | **6214ZENR** | 62000 | 44000 | 14.4 | 5100 | 6300 | 79 | 116 | 136.5 | 1.5 | 6.5 | 1.07 | **6214N** |
| | 150 | 35 | 2.1 | 0.5 | 145.24 | 4.9 | 3.1 | 159.7 | 2.82 | **6314N** | **6314NR** | **6314ZENR** | 104000 | 68000 | 13.2 | 4600 | 5400 | 82 | 138 | 162 | 2 | 7.3 | 2.52 | **6314N** |
| 75 | 95 | 10 | 0.6 | 0.5 | 92.9 | 1.7 | 1.3 | 99.4 | 1.12 | **6815N** | **6815NR** | **6815ZNR** | 12500 | 12800 | 16.0 | 6500 | 7600 | 79 | 91 | 101 | 0.6 | 2.5 | 0.150 | **6815N** |
| | 105 | 16 | 1 | 0.5 | 102.6 | 2.5 | 1.3 | 110.7 | 1.12 | **6915N** | **6915NR** | **6915ZNR** | 20800 | 19700 | 16.5 | 6200 | 7200 | 80 | 100 | 112 | 1 | 3.3 | 0.350 | **6915N** |
| | 115 | 20 | 1.1 | 0.5 | 111.81 | 2.87 | 2.7 | 121.6 | 2.46 | **6015N** | **6015NR** | **6015ZENR** | 39500 | 33500 | 15.7 | 5700 | 6700 | 81 | 109 | 123 | 1 | 5 | 0.615 | **6015N** |
| | 130 | 25 | 1.5 | 0.5 | 125.22 | 4.06 | 3.1 | 139.7 | 2.82 | **6215N** | **6215NR** | **6215ZENR** | 66000 | 49500 | 14.7 | 4800 | 5600 | 84 | 121 | 141.5 | 1.5 | 6.5 | 1.18 | **6215N** |
| | 160 | 37 | 2.1 | 0.5 | 155.22 | 4.9 | 3.1 | 169.7 | 2.82 | **6315N** | **6315NR** | **6315ZENR** | 113000 | 77000 | 13.2 | 4300 | 5000 | 87 | 148 | 172 | 2 | 7.3 | 3.02 | **6315N** |
| 80 | 100 | 10 | 0.6 | 0.5 | 97.9 | 1.7 | 1.3 | 104.4 | 1.12 | **6816N** | **6816NR** | **6816ZNR** | 12700 | 13300 | 15.9 | 6000 | 7100 | 84 | 96 | 106 | 0.6 | 2.5 | 0.160 | **6816N** |
| | 110 | 16 | 1 | 0.5 | 107.6 | 2.5 | 1.3 | 115.7 | 1.12 | **6916N** | **6916NR** | **6916ZNR** | 27600 | 25300 | 16.4 | 5700 | 6700 | 85 | 105 | 117 | 1 | 3.3 | 0.370 | **6916N** |
| | 125 | 22 | 1.1 | 0.5 | 120.22 | 2.87 | 3.1 | 134.7 | 2.82 | **6016N** | **6016NR** | **6016ZNR** | 47500 | 39500 | 15.6 | 5300 | 6300 | 86 | 119 | 136.5 | 1 | 5.3 | 0.825 | **6016N** |
| | 140 | 26 | 2 | 0.5 | 135.23 | 4.9 | 3.1 | 149.7 | 2.82 | **6216N** | **6216NR** | **6216ZNR** | 72500 | 53000 | 14.6 | 4500 | 5300 | 90 | 130 | 152 | 2 | 7.3 | 1.40 | **6216N** |
| | 170 | 39 | 2.1 | 0.5 | 163.65 | 5.69 | 3.5 | 182.9 | 3.1 | **6316N** | **6316NR** | **6316ZNR** | 123000 | 86500 | 13.2 | 4000 | 4800 | 92 | 158 | 185 | 2 | 8.4 | 3.59 | **6316N** |
| 85 | 110 | 13 | 1 | 0.5 | 107.6 | 2.1 | 1.3 | 115.7 | 1.12 | **6817N** | **6817NR** | **6817ZNR** | 18700 | 19000 | 16.2 | 5700 | 6700 | 90 | 105 | 117 | 1 | 2.9 | 0.272 | **6817N** |
| | 120 | 18 | 1.1 | 0.5 | 117.6 | 3.3 | 1.3 | 125.7 | 1.12 | **6917N** | **6917NR** | **6917ZNR** | 32000 | 29600 | 16.4 | 5400 | 6300 | 91 | 113 | 127 | 1 | 4.1 | 0.524 | **6917N** |
| | 130 | 22 | 1.1 | 0.5 | 125.22 | 2.87 | 3.1 | 139.7 | 2.82 | **6017N** | **6017NR** | **6017ZNR** | 49500 | 43000 | 15.7 | 5000 | 6000 | 91 | 124 | 141.5 | 1 | 5.3 | 0.863 | **6017N** |
| | 150 | 28 | 2 | 0.5 | 145.24 | 4.9 | 3.1 | 159.7 | 2.82 | **6217N** | **6217NR** | **6217ZNR** | 84000 | 62000 | 14.5 | 4300 | 5000 | 95 | 140 | 162 | 2 | 7.3 | 1.79 | **6217N** |
| | 180 | 41 | 3 | 0.5 | 173.66 | 5.69 | 3.5 | 192.9 | 3.1 | **6317N** | **6317NR** | **6317ZNR** | 133000 | 96500 | 13.3 | 3800 | 4500 | 99 | 166 | 195 | 2.5 | 8.4 | 4.23 | **6317N** |
| 90 | 115 | 13 | 1 | 0.5 | 112.6 | 2.1 | 1.3 | 120.7 | 1.2 | **6818N** | **6818NR** | **6818ZNR** | 19000 | 19700 | 16.1 | 5400 | 6300 | 95 | 110 | 122 | 1 | 2.9 | 0.288 | **6818N** |
| | 125 | 18 | 1.1 | 0.5 | 122.6 | 3.3 | 1.3 | 130.7 | 1.12 | **6918N** | **6918NR** | **6918ZNR** | 33000 | 31500 | 16.4 | 5100 | 6000 | 96 | 119 | 132 | 1 | 4.1 | 0.549 | **6918N** |
| | 140 | 24 | 1.5 | 0.5 | 135.23 | 3.71 | 3.1 | 149.7 | 2.82 | **6018N** | **6018NR** | **6018ZNR** | 58000 | 49500 | 15.6 | 4800 | 5600 | 97 | 133 | 152 | 1.5 | 6.1 | 1.13 | **6018N** |
| | 160 | 30 | 2 | 0.5 | 155.22 | 4.9 | 3.1 | 169.7 | 2.82 | **6218N** | **6218NR** | **6218ZNR** | 96000 | 71500 | 14.5 | 4000 | 4800 | 100 | 150 | 172 | 2 | 7.3 | 2.15 | **6218N** |
| | 190 | 43 | 3 | 0.5 | 183.64 | 5.69 | 3.5 | 202.9 | 3.1 | **6318N** | **6318NR** | **6318ZNR** | 143000 | 107000 | 13.3 | 3600 | 4300 | 104 | 176 | 205 | 2.5 | 8.4 | 4.91 | **6318N** |

Note: (1) Bearing No. ZE means one shield type, two shields type is also available.
Remark: Dimensions of snap ring groove and snap ring are shown on pages 45 to 48.

# Deep-groove Ball Bearings

## With snap ring groove / With snap ring / Shield type with snap ring

Bore Diameter: 95～130mm

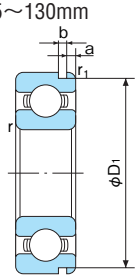


With snap ring groove (N)

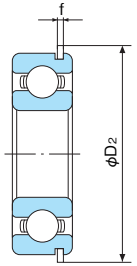


With snap ring (NR)

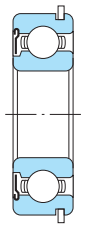

Shield type with snap ring (ZNR)

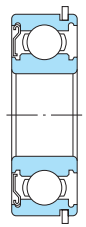

Shield type with snap ring (ZENR)

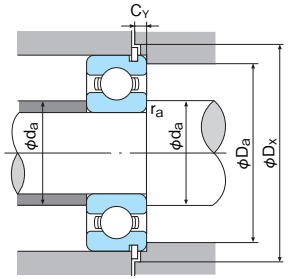


**■Dynamic equivalent radial load**
Pr=XFr+YFa

**■Static equivalent radial load**
Larger value of following to be used:
Por=0.6Fr+0.5Fa
Por=Fr

| $\frac{f_0 F_a}{C_{or}}$ | e | $\frac{F_a}{F_r} \leq e$ | | $\frac{F_a}{F_r} > e$ | |
|---|---|---|---|---|---|
| | | X | Y | X | Y |
| 0.172 | 0.19 | | | | 2.30 |
| 0.345 | 0.22 | 1 | 0 | 0.56 | 1.99 |
| 0.689 | 0.26 | | | | 1.71 |
| 1.03 | 0.28 | | | | 1.55 |
| 1.38 | 0.30 | 1 | 0 | 0.56 | 1.45 |
| 2.07 | 0.34 | | | | 1.31 |
| 3.45 | 0.38 | | | | 1.15 |
| 5.17 | 0.42 | 1 | 0 | 0.56 | 1.04 |
| 6.89 | 0.44 | | | | 1.00 |

1N=0.102kgf

| Boundary dimensions (mm) | | | | | Dimensions of snap ring groove and snap ring (mm) | | | | | Bearing No.(1) | | | Basic dynamic load rating Cr (N) | Basic static load rating Cor (N) | Factor fo | Limiting speed (min-1) | | Abutment and fillet dimensions (mm) | | | | | Mass (kg) | Bearing No. |
|---|---|---|---|---|---|---|---|---|---|---|---|---|---|---|---|---|---|---|---|---|---|---|---|---|
| d | D | B | r (min) | r1 (min) | D1 (max) | a (max) | b (min) | D2 (max) | f (max) | | | | | | | Grease lubrication | Oil lubrication | da (min) | Da (max) | Dx (min) | ra (max) | CY (max) | | |
| 95 | 120 | 13 | 1 | 0.5 | 117.6 | 2.1 | 1.3 | 125.7 | 1.12 | **6819N** | **6819NR** | **6819ZNR** | 19300 | 20500 | 16.0 | 5000 | 6000 | 100 | 115 | 127 | 1 | 2.9 | 0.307 | **6819N** |
| | 130 | 18 | 1.1 | 0.5 | 127.6 | 3.3 | 1.3 | 135.7 | 1.12 | **6919N** | **6919NR** | **6919ZNR** | 33500 | 33500 | 16.5 | 4800 | 5700 | 101 | 124 | 137 | 1 | 4.1 | 0.576 | **6919N** |
| | 145 | 24 | 1.5 | 0.5 | 140.23 | 3.71 | 3.1 | 154.7 | 2.82 | **6019N** | **6019NR** | **6019ZNR** | 60500 | 54000 | 15.8 | 4500 | 5300 | 102 | 138 | 157 | 1.5 | 6.1 | 1.16 | **6019N** |
| | 170 | 32 | 2.1 | 0.5 | 163.65 | 5.69 | 3.5 | 182.9 | 3.1 | **6219N** | **6219NR** | **6219ZNR** | 109000 | 81500 | 14.4 | 3800 | 4500 | 107 | 158 | 185 | 2 | 8.4 | 2.62 | **6219N** |
| | 200 | 45 | 3 | 0.5 | 193.65 | 5.69 | 3.5 | 212.9 | 3.1 | **6319N** | **6319NR** | **6319ZNR** | 153000 | 118000 | 13.3 | 3300 | 3900 | 109 | 186 | 215 | 2.5 | 8.4 | 5.67 | **6319N** |
| 100 | 125 | 13 | 1 | 0.5 | 122.6 | 2.1 | 1.3 | 130.7 | 1.12 | **6820N** | **6820NR** | **6820ZNR** | 19600 | 21200 | 16.0 | 4800 | 5600 | 105 | 120 | 132 | 1 | 2.9 | 0.320 | **6820N** |
| | 140 | 20 | 1.1 | 0.5 | 137.6 | 3.3 | 1.9 | 145.7 | 1.7 | **6920N** | **6920NR** | **6920ZNR** | 37000 | 36500 | 16.5 | 4500 | 5300 | 106 | 134 | 147 | 1 | 4.7 | 0.780 | **6920N** |
| | 150 | 24 | 1.5 | 0.5 | 145.24 | 3.71 | 3.1 | 159.7 | 2.82 | **6020N** | **6020NR** | **6020ZNR** | 60000 | 54000 | 15.9 | 4300 | 5300 | 107 | 143 | 162 | 1.5 | 6.1 | 1.20 | **6020N** |
| | 180 | 34 | 2.1 | 0.5 | 173.66 | 5.69 | 3.5 | 192.9 | 3.1 | **6220N** | **6220NR** | **6220ZNR** | 122000 | 93000 | 14.4 | 3600 | 4300 | 112 | 168 | 195 | 2 | 8.4 | 3.14 | **6220N** |
| 105 | 130 | 13 | 1 | 0.5 | 127.6 | 2.1 | 1.3 | 135.7 | 1.12 | **6821N** | **6821NR** | **6821ZNR** | 19900 | 21900 | 15.9 | 4800 | 5600 | 110 | 125 | 137 | 1 | 2.9 | 0.335 | **6821N** |
| | 145 | 20 | 1.1 | 0.5 | 142.6 | 3.3 | 1.9 | 150.7 | 1.7 | **6921N** | **6921NR** | **6921ZNR** | 42500 | 42000 | 16.4 | 4300 | 5300 | 111 | 139 | 152 | 1 | 4.7 | 0.803 | **6921N** |
| | 160 | 26 | 2 | 0.5 | 155.22 | 3.71 | 3.1 | 169.7 | 2.82 | **6021N** | **6021NR** | **6021ZNR** | 72500 | 65500 | 15.8 | 4000 | 4800 | 113 | 152 | 172 | 2 | 6.1 | 1.54 | **6021N** |
| | 190 | 36 | 2.1 | 0.5 | 183.64 | 5.69 | 3.5 | 202.9 | 3.1 | **6221N** | **6221NR** | **6221ZNR** | 133000 | 104000 | 14.3 | 3400 | 4000 | 117 | 178 | 205 | 2 | 8.4 | 3.76 | **6221N** |
| 110 | 140 | 16 | 1 | 0.5 | 137.6 | 2.5 | 1.9 | 145.7 | 1.7 | **6822N** | **6822NR** | **6822ZNR** | 27300 | 29400 | 16.9 | 4300 | 5300 | 115 | 135 | 147 | 1 | 3.9 | 0.526 | **6822N** |
| | 150 | 20 | 1.1 | 0.5 | 147.6 | 3.3 | 1.9 | 155.7 | 1.7 | **6922N** | **6922NR** | **6922ZNR** | 38000 | 38500 | 16.4 | 4300 | 5000 | 116 | 144 | 157 | 1 | 4.7 | 0.846 | **6922N** |
| | 170 | 28 | 2 | 0.5 | 163.65 | 3.71 | 3.5 | 182.9 | 3.1 | **6022N** | **6022NR** | **6022ZNR** | 84500 | 73000 | 15.5 | 3800 | 4500 | 118 | 162 | 185 | 2 | 6.4 | 1.91 | **6022N** |
| | 200 | 38 | 2.1 | 0.5 | 193.65 | 5.69 | 3.5 | 212.9 | 3.1 | **6222N** | **6222NR** | **6222ZNR** | 144000 | 117000 | 14.3 | 3200 | 3800 | 122 | 188 | 215 | 2 | 8.4 | 4.36 | **6222N** |
| 120 | 150 | 16 | 1 | 0.5 | 147.6 | 2.5 | 1.9 | 155.7 | 1.7 | **6824N** | **6824NR** | **6824ZNR** | 28300 | 31500 | 16.0 | 4000 | 4800 | 125 | 145 | 157 | 1 | 3.9 | 0.567 | **6824N** |
| | 165 | 22 | 1.1 | 0.5 | 161.8 | 3.7 | 1.9 | 171.5 | 1.7 | **6924N** | **6924NR** | **6924ZNR** | 53000 | 54000 | 16.5 | 3800 | 4600 | 126 | 159 | 173 | 1 | 5.1 | 1.15 | **6924N** |
| | 180 | 28 | 2 | 0.5 | 173.66 | 3.71 | 3.5 | 192.9 | 3.1 | **6024N** | **6024NR** | **6024ZNR** | 88000 | 79500 | 15.7 | 3600 | 4300 | 128 | 172 | 195 | 2 | 6.4 | 2.36 | **6024N** |
| 130 | 165 | 18 | 1.1 | 0.5 | 161.8 | 3.3 | 1.9 | 171.5 | 1.7 | **6826N** | **6826NR** | **6826ZNR** | 37000 | 41000 | 16.1 | 3700 | 4400 | 136 | 158 | 173 | 1 | 4.7 | 0.815 | **6826N** |
| | 180 | 24 | 1.5 | 0.5 | 176.8 | 3.7 | 1.9 | 186.5 | 1.7 | **6926N** | **6926NR** | **6926ZNR** | 65000 | 67000 | 16.4 | 3500 | 4200 | 137 | 173 | 188 | 1.5 | 5.1 | 1.81 | **6926N** |
| | 200 | 33 | 2 | 0.5 | 193.65 | 5.69 | 3.5 | 212.9 | 3.1 | **6026N** | **6026NR** | **6026ZNR** | 106000 | 101000 | 15.7 | 3200 | 3800 | 138 | 192 | 215 | 2 | 8.4 | 3.60 | **6026N** |

Note: (1) Bearing No. ZE means one shield type, two shields type is also available.
Remark: Dimensions of snap ring groove and snap ring are shown on pages 45 to 48.

# Angular Contact Ball Bearings

Tolerance ····· Page 52
Preload ····· Page 95

## ● Design

Angular Contact Ball Bearings can sustain combined loads of simultaneously acting radial and axial loads because they have a contact angle (α).

The contact angle is defined as the angle between the line joining the points of contact between the ball and the raceways in the radial plane.

## 1. Single-row Angular Contact Ball Bearings

These bearings are designed with three contact angle classifications as shown in Table 1.
Normally, contact angle A design and B design are fitted with a cage as shown in Table 2-1. High precision (JIS/ISO class 5 or higher) may be fitted with a machined cage of bronze or phenolic resin or a polyamide cage.
Contact angle C design are generally applied high precision, JIS (ISO) class 5 or higher, and are fitted with a machined phenolic resin cage or a polyamide cage.

**Table 1. Contact Angle and Characteristics of Single-row Angular Contact Ball Bearings**

| Contact Angle Symbol | Example Bearing No. | Contact Angle (α) | Speed | Load capability comparison(2) | | Cross section |
|---|---|---|---|---|---|---|
| | | | | Radial Load Direction (X) | Axial Load Direction (Y) | |
| A | 7205(1) | 30° | — | — | — | 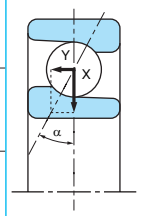 |
| B | 7205B | 40° | Less | Less | Greater | |
| C | 7205C | 15° | Greater | Greater | Less | |

Notes: (1) Contact angle symbol "A" is omitted.
(2) Axial load can be accommodated in one direction only.

**Table 2-1. Angular Contact Ball Bearing Cage for Contact Angle Symbol A and B (For JIS/ISO class 0 or 6)**

| | Applicable Bore Diameter Number | |
|---|---|---|
| | Pressed Steel | Machined Brass |
| 72, 72B | 00～22 | 24～40 |
| 73, 73B | 00～19 | 20～40 |

**Table 2-2. Angular Contact Ball Bearing Cage for Contact Angle Symbol C**

| | Applicable Bore Diameter Number | |
|---|---|---|
| | Machined Synthetic Resin | Polyamide |
| 70C | 00～40 | 00～20 |
| 72C | 00～26 | 00～20 |
| 73C | 00～22 | — |

## 2. Combination Angular Contact Ball Bearings

Single-row Angular Contact Ball Bearings are seldom used as a single unit. Normally they are used as a combination of two and more units. High precision paired combination Angular Contact Ball Bearings (JIS/ISO class 5 or higher) are used for applications such as machine tool spindles and are usually preloaded. Three types of combinations are available:

1) DB, back - to - back
2) DF, face - to - face
3) DT, tandem

Because clearance of matched set parts is adjusted before shipment, care should be taken to prevent mixing of parts from other sets.

Load-carrying capability of combined Angular Contact Bearings are shown in Table 3.

Flush ground bearings or Universal matching bearings are also available.

DU can be mounted as back-to-back, face-to-face or in tandem.

**Table 3. Load-carrying Characteristics of Combination Angular Contact Ball Bearings**

| Configuration | Load Center Distance (a) | Load Capability | Moment Load Rigidity | Cross Section |
|---|---|---|---|---|
| Back - to -Back (DB) | Long | ↔ | Greater | 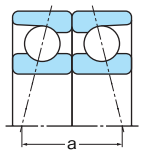 |
| Face - to -Face (DF) | Short | ↔ | Less | 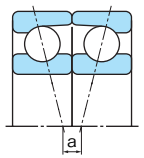 |
| Tandem (DT) | – | ↑→ | – | 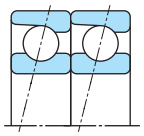 |

## 3. Double-row Angular Contact Ball Bearings

This type bearings is made in two contact angle levels as shown in Table 4. They are selected according to sustained axial and moment load. Pressed steel cage are used for them. Some sizes of Double-row Angular Contact Ball Bearing are available with contact seals (2NS) or shields (ZZ).

**Table 4. Double-row Angular Contact Ball Bearing Contact Angles and Symbols**

| Contact Angle Symbol | Contact Angle (α) | Example Bearing No. |
|---|---|---|
| None | 20° | 5205 |
| A | 30° | 5205A |

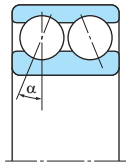





### ● Flush ground set combinations (Universal matching)

NACHI Angular Contact Ball Bearings with a suffix U are flush ground to permit the use of random combinations where two or more bearings are mounted.

**7206B U**

**7206CY U P4**

└─Flush ground (free set matching)

### ● Speed Limits

With respect to single-row or combination bearings, the dimension tables show limiting speed for bearings made with machined cages or a polyamide cages. For bearings made with pressed-cages, multiply the table limit by 0.8.

For contact angle C design bearings, the table limiting speeds are applied to high precision bearings of class 5 or higher.

These limiting speeds can be applied when a high quality grease or oil is supplied in proper quantity under light load conditions. When Angular Contact Ball Bearings are used in combination of two or more units, or with larger preload to improve rigidity, the limiting speed must be decreased. Please contact NACHI for design assistance.

### ● Attention

(1) If bearings are operated under severe conditions such as close to limiting speed, high temperature, or vibrating load, please consult NACHI.
(2) Bearings with polyamide cage should be use at less than 120°C.
(3) Combination Angular Contact Ball Bearings should not be mixed with those of other bearings.
(4) When combination bearings with a optional preload is required, please contact NACHI.

# Angular Contact Ball Bearings Single Mounting / Duplex Mounting

Bore Diameter: 10～17mm

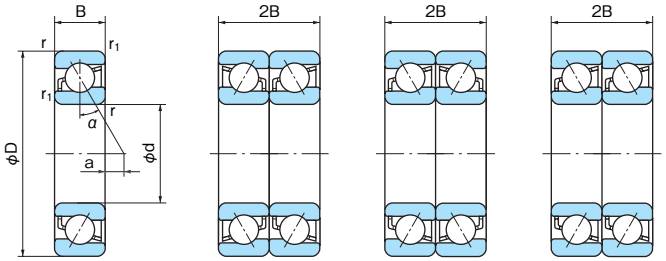


Single DB (Back-to-back) DF (Face-to-face) DT (Tandem)

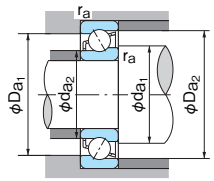


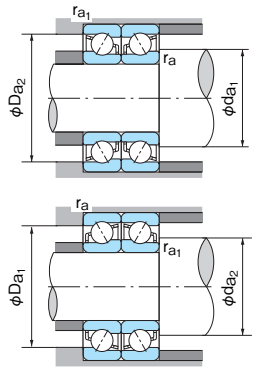


■Dynamic equivalent radial load

Pr=XFr+YFa

| Contact angle | iFa/Cor | e | Single or DT Fa/Fr > e X | Single or DT Fa/Fr > e Y | DB or DF Fa/Fr ≦ e X | DB or DF Fa/Fr ≦ e Y | DB or DF Fa/Fr > e X | DB or DF Fa/Fr > e Y |
|---|---|---|---|---|---|---|---|---|
| 15° | 0.015 | 0.38 | | 1.47 | | 1.65 | | 2.39 |
| | 0.029 | 0.40 | 0.44 | 1.40 | 1 | 1.57 | 0.72 | 2.28 |
| | 0.058 | 0.43 | | 1.30 | | 1.46 | | 2.11 |
| | 0.087 | 0.46 | | 1.23 | | 1.38 | | 2.00 |
| | 0.12 | 0.47 | 0.44 | 1.19 | 1 | 1.34 | 0.72 | 1.93 |
| | 0.17 | 0.50 | | 1.12 | | 1.26 | | 1.82 |
| | 0.29 | 0.55 | | 1.02 | | 1.14 | | 1.66 |
| | 0.44 | 0.56 | 0.44 | 1.00 | 1 | 1.12 | 0.72 | 1.63 |
| | 0.58 | 0.56 | | 1.00 | | 1.12 | | 1.63 |
| 30° | — | 0.8 | 0.39 | 0.76 | 1 | 0.78 | 0.63 | 1.24 |
| 40° | — | 1.14 | 0.35 | 0.57 | 1 | 0.55 | 0.57 | 0.93 |

■i = 2 for DB or DF mounting
i = 1 for Single or DT mounting

■Single or DT mounting When Fa/Fr≦e, use Pr = Fr

■Static equivalent radial load

Por=XoFr+YoFa

| Contact angle | Single or DT $X_0$ | Single or DT $Y_0$ | DB or DF $X_0$ | DB or DF $Y_0$ |
|---|---|---|---|---|
| 15° | 0.5 | 0.46 | 1 | 0.92 |
| 30° | 0.5 | 0.33 | 1 | 0.66 |
| 40° | 0.5 | 0.26 | 1 | 0.52 |

Single or DT mounting When Por<Fr, use Pr = Fr

1N=0.102kgf

| Boundary dimensions (mm) d | D | B | r (min) | r1 (min) | Load center (mm) a | Bearing No. Single | Duplex | | | Basic dynamic load rating Cr (N) Single | Duplex | Basic static load rating Cor (N) Single | Duplex | Limiting speed (min-1) Grease lubrication Single | Grease lubrication Duplex | Oil lubrication Single | Oil lubrication Duplex | Abutment and fillet dimensions (mm) da1 (min) | da2 (min) | Da1 (max) | Da2 (max) | ra (max) | ra1 (max) | Mass (kg) Single | Bearing No. |
|---|---|---|---|---|---|---|---|---|---|---|---|---|---|---|---|---|---|---|---|---|---|---|---|---|---|
| 10 | 26 | 8 | 0.3 | 0.15 | 1.2 | 7000 | 7000DB | 7000DF | 7000DT | 5000 | 8150 | 2340 | 4650 | 23000 | 19000 | 31000 | 26000 | 12 | 12 | 24 | 25 | 0.3 | 0.15 | 0.022 | 7000 |
| | 26 | 8 | 0.3 | 0.15 | –1.9 | 7000C | 7000CDB | 7000CDF | 7000CDT | 5350 | 8700 | 2500 | 5000 | 44000 | 35000 | 61000 | 49000 | 12 | 12 | 24 | 25 | 0.3 | 0.15 | 0.022 | 7000C |
| | 30 | 9 | 0.6 | 0.3 | 1.3 | 7200 | 7200DB | 7200DF | 7200DT | 5400 | 8800 | 2710 | 5400 | 22000 | 18000 | 30000 | 24000 | 15 | 12 | 25 | 27.4 | 0.6 | 0.3 | 0.034 | 7200 |
| | 30 | 9 | 0.6 | 0.3 | 3.9 | 7200B | 7200BDB | 7200BDF | 7200BDT | 5150 | 8350 | 2570 | 5150 | 19000 | 16000 | 28000 | 22000 | 15 | 12 | 25 | 27.4 | 0.6 | 0.3 | 0.034 | 7200B |
| | 30 | 9 | 0.6 | 0.3 | –2.2 | 7200C | 7200CDB | 7200CDF | 7200CDT | 6950 | 11300 | 3300 | 6650 | 40000 | 32000 | 55000 | 44000 | 15 | 15 | 25 | 27.4 | 0.6 | 0.3 | 0.034 | 7200C |
| | 35 | 11 | 0.6 | 0.3 | 1.0 | 7300 | 7300DB | 7300DF | 7300DT | 9300 | 15100 | 4300 | 8600 | 20000 | 16000 | 26000 | 21000 | 15 | 12 | 30 | 32.4 | 0.6 | 0.3 | 0.055 | 7300 |
| | 35 | 11 | 0.6 | 0.3 | 3.9 | 7300B | 7300BDB | 7300BDF | 7300BDT | 8950 | 14500 | 4150 | 8250 | 18000 | 14000 | 24000 | 19000 | 15 | 12 | 30 | 32.4 | 0.6 | 0.3 | 0.055 | 7300B |
| | 35 | 11 | 0.6 | 0.3 | –2.8 | 7300C | 7300CDB | 7300CDF | 7300CDT | 9850 | 16000 | 4600 | 9250 | 36000 | 29000 | 49000 | 39000 | 15 | 15 | 30 | 32.4 | 0.6 | 0.3 | 0.055 | 7300C |
| 12 | 28 | 8 | 0.3 | 0.15 | 1.7 | 7001 | 7001DB | 7001DF | 7001DT | 5050 | 8800 | 2710 | 5700 | 22000 | 18000 | 29000 | 23000 | 14 | 14 | 26 | 27 | 0.3 | 0.15 | 0.024 | 7001 |
| | 28 | 8 | 0.3 | 0.15 | –1.7 | 7001C | 7001CDB | 7001CDF | 7001CDT | 5800 | 9450 | 2910 | 5800 | 40000 | 32000 | 55000 | 44000 | 14 | 14 | 26 | 27 | 0.3 | 0.15 | 0.024 | 7001C |
| | 32 | 10 | 0.6 | 0.3 | 1.4 | 7201 | 7201DB | 7201DF | 7201DT | 7600 | 12400 | 3960 | 7950 | 20000 | 16000 | 27000 | 22000 | 17 | 14 | 27 | 29.4 | 0.6 | 0.3 | 0.040 | 7201 |
| | 32 | 10 | 0.6 | 0.3 | 4.2 | 7201B | 7201BDB | 7201BDF | 7201BDT | 7200 | 11700 | 3800 | 7550 | 17000 | 15000 | 24000 | 20000 | 17 | 14 | 27 | 29.4 | 0.6 | 0.3 | 0.040 | 7201B |
| | 32 | 10 | 0.6 | 0.3 | –2.5 | 7201C | 7201CDB | 7201CDF | 7201CDT | 7950 | 13000 | 3900 | 7750 | 36000 | 29000 | 50000 | 40000 | 17 | 17 | 27 | 29.4 | 0.6 | 0.3 | 0.040 | 7201C |
| | 37 | 12 | 1 | 0.6 | 1.1 | 7301 | 7301DB | 7301DF | 7301DT | 11200 | 18200 | 5250 | 10500 | 18000 | 15000 | 24000 | 20000 | 18 | 15 | 31 | 33.4 | 1 | 0.6 | 0.063 | 7301 |
| | 37 | 12 | 1 | 0.6 | 4.3 | 7301B | 7301BDB | 7301BDF | 7301BDT | 10800 | 17500 | 5050 | 10100 | 16000 | 13000 | 22000 | 18000 | 18 | 15 | 31 | 33.4 | 1 | 0.6 | 0.063 | 7301B |
| | 37 | 12 | 1 | 0.6 | –3.1 | 7301C | 7301CDB | 7301CDF | 7301CDT | 10800 | 17500 | 4900 | 9800 | 33000 | 26000 | 45000 | 36000 | 18 | 18 | 31 | 33.4 | 1 | 0.6 | 0.063 | 7301C |
| 15 | 32 | 9 | 0.3 | 0.15 | 2.3 | 7002 | 7002DB | 7002DF | 7002DT | 6150 | 9950 | 3400 | 6850 | 18000 | 15000 | 24000 | 20000 | 17 | 17 | 30 | 31 | 0.3 | 0.15 | 0.035 | 7002 |
| | 32 | 9 | 0.3 | 0.15 | –1.8 | 7002C | 7002CDB | 7002CDF | 7002CDT | 6650 | 10800 | 3700 | 7450 | 34000 | 27000 | 47000 | 38000 | 17 | 17 | 30 | 31 | 0.3 | 0.15 | 0.035 | 7002C |
| | 35 | 11 | 0.6 | 0.3 | 1.7 | 7202 | 7202DB | 7202DF | 7202DT | 9050 | 14700 | 4700 | 9400 | 17000 | 14000 | 23000 | 19000 | 20 | 17 | 30 | 32.4 | 0.6 | 0.3 | 0.048 | 7202 |
| | 35 | 11 | 0.6 | 0.3 | 5.0 | 7202B | 7202BDB | 7202BDF | 7202BDT | 8600 | 14000 | 4500 | 8950 | 16000 | 12000 | 21000 | 17000 | 20 | 17 | 30 | 32.4 | 0.6 | 0.3 | 0.048 | 7202B |
| | 35 | 11 | 0.6 | 0.3 | –2.6 | 7202C | 7202CDB | 7202CDF | 7202CDT | 8700 | 14200 | 4550 | 9150 | 32000 | 26000 | 44000 | 35000 | 20 | 20 | 30 | 32.4 | 0.6 | 0.3 | 0.048 | 7202C |
| | 42 | 13 | 1 | 0.6 | 1.7 | 7302 | 7302DB | 7302DF | 7302DT | 13600 | 22000 | 7100 | 14200 | 16000 | 13000 | 21000 | 17000 | 21 | 18 | 36 | 38.4 | 1 | 0.6 | 0.085 | 7302 |
| | 42 | 13 | 1 | 0.6 | 5.5 | 7302B | 7302BDB | 7302BDF | 7302BDT | 12800 | 21000 | 6750 | 13500 | 14000 | 11000 | 19000 | 16000 | 21 | 18 | 36 | 38.4 | 1 | 0.6 | 0.085 | 7302B |
| | 42 | 13 | 1 | 0.6 | –3.1 | 7302C | 7302CDB | 7302CDF | 7302CDT | 13300 | 21700 | 6850 | 13700 | 28000 | 22000 | 39000 | 31000 | 21 | 21 | 36 | 38.4 | 1 | 0.6 | 0.085 | 7302C |
| 17 | 35 | 10 | 0.3 | 0.15 | 2.5 | 7003 | 7003DB | 7003DF | 7003DT | 6400 | 10400 | 3800 | 7650 | 17000 | 13000 | 22000 | 18000 | 19 | 19 | 33 | 34 | 0.3 | 0.15 | 0.045 | 7003 |
| | 35 | 10 | 0.3 | 0.15 | –2.0 | 7003C | 7003CDB | 7003CDF | 7003CDT | 7000 | 11400 | 4150 | 8300 | 31000 | 25000 | 42000 | 34000 | 19 | 19 | 33 | 34 | 0.3 | 0.15 | 0.045 | 7003C |
| | 40 | 12 | 0.6 | 0.3 | 2.2 | 7203 | 7203DB | 7203DF | 7203DT | 11900 | 19400 | 6600 | 13200 | 16000 | 13000 | 21000 | 17000 | 22 | 19 | 35 | 37.4 | 0.6 | 0.3 | 0.070 | 7203 |
| | 40 | 12 | 0.6 | 0.3 | 6.0 | 7203B | 7203BDB | 7203BDF | 7203BDT | 11300 | 18400 | 6300 | 12600 | 14000 | 11000 | 19000 | 15000 | 22 | 19 | 35 | 37.4 | 0.6 | 0.3 | 0.070 | 7203B |
| | 40 | 12 | 0.6 | 0.3 | –2.7 | 7203C | 7203CDB | 7203CDF | 7203CDT | 10900 | 17800 | 5900 | 11800 | 28000 | 22000 | 39000 | 31000 | 22 | 22 | 35 | 37.4 | 0.6 | 0.3 | 0.070 | 7203C |
| | 47 | 14 | 1 | 0.6 | 2.2 | 7303 | 7303DB | 7303DF | 7303DT | 15900 | 25900 | 8650 | 17300 | 14000 | 11000 | 19000 | 15000 | 23 | 21 | 41 | 43.4 | 1 | 0.6 | 0.120 | 7303 |
| | 47 | 14 | 1 | 0.6 | 6.4 | 7303B | 7303BDB | 7303BDF | 7303BDT | 15200 | 24700 | 8250 | 16500 | 13000 | 10000 | 17000 | 14000 | 23 | 21 | 41 | 43.4 | 1 | 0.6 | 0.120 | 7303B |
| | 47 | 14 | 1 | 0.6 | –3.2 | 7303C | 7303CDB | 7303CDF | 7303CDT | 15900 | 25800 | 8350 | 16700 | 25000 | 20000 | 34000 | 27000 | 23 | 23 | 41 | 43.4 | 1 | 0.6 | 0.120 | 7303C |

Remarks: 1. "a" means the distance between back face and load center.
2. See page 122 regarding limiting speeds.

# Angular Contact Ball Bearings Single Mounting / Duplex Mounting

Bore Diameter: 20～35mm

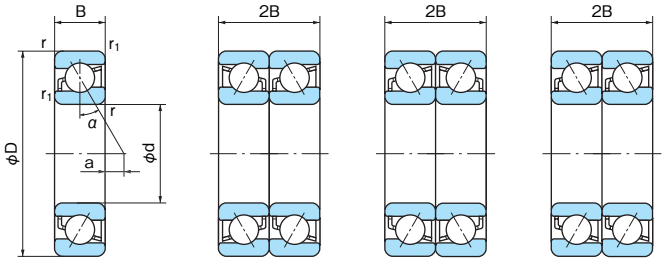


Single DB (Back-to-back) DF (Face-to-face) DT (Tandem)

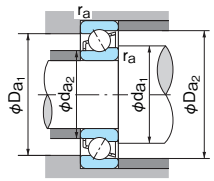


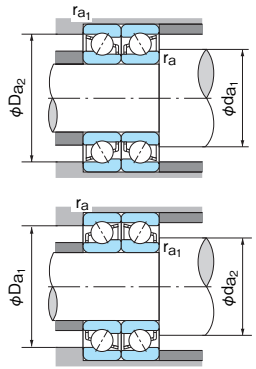


■Dynamic equivalent radial load

Pr=XFr+YFa

| Contact angle | iFa/Cor | e | Single or DT Fa/Fr > e X | Single or DT Fa/Fr > e Y | DB or DF Fa/Fr ≦ e X | DB or DF Fa/Fr ≦ e Y | DB or DF Fa/Fr > e X | DB or DF Fa/Fr > e Y |
|---|---|---|---|---|---|---|---|---|
| 15° | 0.015 | 0.38 | 0.44 | 1.47 | 1 | 1.65 | 0.72 | 2.39 |
| | 0.029 | 0.40 | | 1.40 | | 1.57 | | 2.28 |
| | 0.058 | 0.43 | | 1.30 | | 1.46 | | 2.11 |
| | 0.087 | 0.46 | 0.44 | 1.23 | 1 | 1.38 | 0.72 | 2.00 |
| | 0.12 | 0.47 | | 1.19 | | 1.34 | | 1.93 |
| | 0.17 | 0.50 | | 1.12 | | 1.26 | | 1.82 |
| | 0.29 | 0.55 | 0.44 | 1.02 | 1 | 1.14 | 0.72 | 1.66 |
| | 0.44 | 0.56 | | 1.00 | | 1.12 | | 1.63 |
| | 0.58 | 0.56 | | 1.00 | | 1.12 | | 1.63 |
| 30° | — | 0.8 | 0.39 | 0.76 | 1 | 0.78 | 0.63 | 1.24 |
| 40° | — | 1.14 | 0.35 | 0.57 | 1 | 0.55 | 0.57 | 0.93 |

■i = 2 for DB or DF mounting
i = 1 for Single or DT mounting

■Single or DT mounting When Fa/Fr≦e, use Pr = Fr

■Static equivalent radial load

Por=XoFr+YoFa

| Contact angle | Single or DT $X_0$ | Single or DT $Y_0$ | DB or DF $X_0$ | DB or DF $Y_0$ |
|---|---|---|---|---|
| 15° | 0.5 | 0.46 | 1 | 0.92 |
| 30° | 0.5 | 0.33 | 1 | 0.66 |
| 40° | 0.5 | 0.26 | 1 | 0.52 |

Single or DT mounting When Por<Fr, use Pr = Fr

1N=0.102kgf

| Boundary dimensions (mm) d | D | B | r (min) | r1 (min) | Load center (mm) a | Bearing No. Single | Duplex | | | Basic dynamic load rating Cr (N) Single | Duplex | Basic static load rating Cor (N) Single | Duplex | Limiting speed (min-1) Grease lubrication Single | Grease lubrication Duplex | Oil lubrication Single | Oil lubrication Duplex | Abutment and fillet dimensions (mm) da1 (min) | da2 (min) | Da1 (max) | Da2 (max) | ra (max) | ra1 (max) | Mass (kg) Single | Bearing No. |
|---|---|---|---|---|---|---|---|---|---|---|---|---|---|---|---|---|---|---|---|---|---|---|---|---|---|
| 20 | 42 | 12 | 0.6 | 0.3 | 2.9 | 7004 | 7004DB | 7004DF | 7004DT | 10300 | 16700 | 6050 | 12100 | 15000 | 12000 | 20000 | 16000 | 24 | 24 | 38 | 40 | 0.6 | 0.3 | 0.079 | 7004 |
| | 42 | 12 | 0.6 | 0.3 | –2.4 | 7004C | 7004CDB | 7004CDF | 7004CDT | 11200 | 18200 | 6600 | 13200 | 26000 | 21000 | 35000 | 28000 | 24 | 24 | 38 | 40 | 0.6 | 0.3 | 0.079 | 7004C |
| | 47 | 14 | 1 | 0.6 | 2.7 | 7204 | 7204DB | 7204DF | 7204DT | 14500 | 23500 | 8300 | 16600 | 13000 | 10000 | 18000 | 14000 | 26 | 23 | 41 | 43.4 | 1 | 0.6 | 0.110 | 7204 |
| | 47 | 14 | 1 | 0.6 | 7.1 | 7204B | 7204BDB | 7204BDF | 7204BDT | 13700 | 22300 | 7850 | 15700 | 11000 | 9500 | 16000 | 13000 | 26 | 23 | 41 | 43.4 | 1 | 0.6 | 0.110 | 7204B |
| | 47 | 14 | 1 | 0.6 | –3.1 | 7204C | 7204CDB | 7204CDF | 7204CDT | 14700 | 23800 | 8150 | 16300 | 24000 | 19000 | 33000 | 26000 | 26 | 26 | 41 | 43.4 | 1 | 0.6 | 0.110 | 7204C |
| | 52 | 15 | 1.1 | 0.6 | 2.9 | 7304 | 7304DB | 7304DF | 7304DT | 18700 | 30500 | 10400 | 20800 | 13000 | 10000 | 17000 | 13000 | 27 | 25 | 45 | 47 | 1 | 0.6 | 0.150 | 7304 |
| | 52 | 15 | 1.1 | 0.6 | 7.6 | 7304B | 7304BDB | 7304BDF | 7304BDT | 17800 | 28900 | 9900 | 19800 | 10000 | 9000 | 15000 | 12000 | 27 | 25 | 45 | 47 | 1 | 0.6 | 0.150 | 7304B |
| | 52 | 15 | 1.1 | 0.6 | –3.2 | 7304C | 7304CDB | 7304CDF | 7304CDT | 18600 | 30000 | 10000 | 20000 | 22000 | 18000 | 31000 | 25000 | 27 | 27 | 45 | 47 | 1 | 0.6 | 0.150 | 7304C |
| 25 | 47 | 12 | 0.6 | 0.3 | 4.4 | 7005 | 7005DB | 7005DF | 7005DT | 11300 | 18400 | 7400 | 14800 | 13000 | 10000 | 17000 | 13000 | 29 | 29 | 43 | 45 | 0.6 | 0.3 | 0.091 | 7005 |
| | 47 | 12 | 0.6 | 0.3 | –1.8 | 7005C | 7005CDB | 7005CDF | 7005CDT | 12900 | 21000 | 8650 | 17300 | 22000 | 18000 | 31000 | 25000 | 29 | 29 | 43 | 45 | 0.6 | 0.3 | 0.091 | 7005C |
| | 52 | 15 | 1 | 0.6 | 3.6 | 7205 | 7205DB | 7205DF | 7205DT | 16200 | 26300 | 10200 | 20500 | 12000 | 9500 | 15000 | 12000 | 31 | 28 | 46 | 48.4 | 1 | 0.6 | 0.135 | 7205 |
| | 52 | 15 | 1 | 0.6 | 8.9 | 7205B | 7205BDB | 7205BDF | 7205BDT | 15300 | 24800 | 9700 | 19400 | 9500 | 8000 | 14000 | 11000 | 31 | 28 | 46 | 48.4 | 1 | 0.6 | 0.135 | 7205B |
| | 52 | 15 | 1 | 0.6 | –3.1 | 7205C | 7205CDB | 7205CDF | 7205CDT | 16700 | 27100 | 10300 | 20700 | 21000 | 17000 | 29000 | 23000 | 31 | 31 | 46 | 48.4 | 1 | 0.6 | 0.135 | 7205C |
| | 62 | 17 | 1.1 | 0.6 | 4.1 | 7305 | 7305DB | 7305DF | 7305DT | 26400 | 43000 | 15800 | 31500 | 10000 | 8500 | 14000 | 11000 | 32 | 30 | 55 | 57 | 1 | 0.6 | 0.245 | 7305 |
| | 62 | 17 | 1.1 | 0.6 | 9.8 | 7305B | 7305BDB | 7305BDF | 7305BDT | 25100 | 40500 | 15100 | 30000 | 8500 | 7300 | 12000 | 10000 | 32 | 30 | 55 | 57 | 1 | 0.6 | 0.245 | 7305B |
| | 62 | 17 | 1.1 | 0.6 | –3.4 | 7305C | 7305CDB | 7305CDF | 7305CDT | 26600 | 43000 | 15500 | 31000 | 18000 | 14000 | 25000 | 20000 | 32 | 32 | 55 | 57 | 1 | 0.6 | 0.245 | 7305C |
| 30 | 55 | 13 | 1 | 0.6 | 5.8 | 7006 | 7006DB | 7006DF | 7006DT | 14500 | 23600 | 10100 | 20300 | 12000 | 8500 | 14000 | 11000 | 35 | 35 | 50 | 52 | 1 | 0.6 | 0.135 | 7006 |
| | 55 | 13 | 1 | 0.6 | –1.6 | 7006C | 7006CDB | 7006CDF | 7006CDT | 16000 | 25900 | 11100 | 24000 | 19000 | 15000 | 26000 | 21000 | 35 | 35 | 50 | 52 | 1 | 0.6 | 0.135 | 7006C |
| | 62 | 16 | 1 | 0.6 | 5.3 | 7206 | 7206DB | 7206DF | 7206DT | 22500 | 36500 | 14800 | 29600 | 10000 | 8000 | 13000 | 10000 | 36 | 33 | 56 | 58.4 | 1 | 0.6 | 0.210 | 7206 |
| | 62 | 16 | 1 | 0.6 | 11.3 | 7206B | 7206BDB | 7206BDF | 7206BDT | 21200 | 34500 | 13900 | 27900 | 8500 | 7000 | 12000 | 9500 | 36 | 33 | 56 | 58.4 | 1 | 0.6 | 0.210 | 7206B |
| | 62 | 16 | 1 | 0.6 | –2.7 | 7206C | 7206CDB | 7206CDF | 7206CDT | 23200 | 37500 | 14900 | 29700 | 18000 | 14000 | 24000 | 19000 | 36 | 36 | 56 | 58.4 | 1 | 0.6 | 0.210 | 7206C |
| | 72 | 19 | 1.1 | 0.6 | 5.2 | 7306 | 7306DB | 7306DF | 7306DT | 33500 | 54500 | 22400 | 44500 | 9000 | 7000 | 12000 | 9500 | 37 | 35 | 65 | 67 | 1 | 0.6 | 0.360 | 7306 |
| | 72 | 19 | 1.1 | 0.6 | 11.9 | 7306B | 7306BDB | 7306BDF | 7306BDT | 32000 | 52000 | 21000 | 42000 | 7500 | 6100 | 10000 | 8500 | 37 | 35 | 65 | 67 | 1 | 0.6 | 0.360 | 7306B |
| | 72 | 19 | 1.1 | 0.6 | –3.6 | 7306C | 7306CDB | 7306CDF | 7306CDT | 32500 | 52500 | 20400 | 40500 | 16000 | 13000 | 22000 | 18000 | 37 | 37 | 65 | 67 | 1 | 0.6 | 0.360 | 7306C |
| 35 | 62 | 14 | 1 | 0.6 | 7 | 7007 | 7007DB | 7007DF | 7007DT | 17500 | 28500 | 12600 | 25200 | 9500 | 7500 | 13000 | 10000 | 40 | 40 | 57 | 59 | 1 | 0.6 | 0.170 | 7007 |
| | 62 | 14 | 1 | 0.6 | –1.4 | 7007C | 7007CDB | 7007CDF | 7007CDT | 19300 | 31000 | 13700 | 27500 | 16000 | 13000 | 23000 | 18000 | 40 | 40 | 57 | 59 | 1 | 0.6 | 0.170 | 7007C |
| | 72 | 17 | 1.1 | 0.6 | 6.9 | 7207 | 7207DB | 7207DF | 7207DT | 29700 | 48000 | 20000 | 40000 | 8500 | 7000 | 11000 | 9500 | 42 | 40 | 65 | 67 | 1 | 0.6 | 0.295 | 7207 |
| | 72 | 17 | 1.1 | 0.6 | 14.1 | 7207B | 7207BDB | 7207BDF | 7207BDT | 28000 | 45500 | 19000 | 38000 | 7500 | 6000 | 10000 | 8000 | 42 | 40 | 65 | 67 | 1 | 0.6 | 0.295 | 7207B |
| | 72 | 17 | 1.1 | 0.6 | –2.8 | 7207C | 7207CDB | 7207CDF | 7207CDT | 30500 | 49500 | 20100 | 40000 | 15000 | 12000 | 21000 | 17000 | 42 | 42 | 65 | 67 | 1 | 0.6 | 0.295 | 7207C |
| | 80 | 21 | 1.5 | 1 | 6.1 | 7307 | 7307DB | 7307DF | 7307DT | 40000 | 65000 | 26300 | 52500 | 8000 | 6300 | 10000 | 8500 | 44 | 40 | 71 | 74.6 | 1.5 | 1 | 0.475 | 7307 |
| | 80 | 21 | 1.5 | 1 | 13.7 | 7307B | 7307BDB | 7307BDF | 7307BDT | 37500 | 61500 | 24900 | 49500 | 7000 | 5500 | 9500 | 7500 | 44 | 40 | 71 | 74.6 | 1.5 | 1 | 0.475 | 7307B |
| | 80 | 21 | 1.5 | 1 | –3.9 | 7307C | 7307CDB | 7307CDF | 7307CDT | 40500 | 66000 | 26000 | 52000 | 14000 | 11000 | 19000 | 15000 | 44 | 44 | 71 | 74.6 | 1.5 | 1 | 0.475 | 7307C |

Remarks: 1. "a" means the distance between back face and load center.
2. See page 122 regarding limiting speeds.

# Angular Contact Ball Bearings Single Mounting / Duplex Mounting

Bore Diameter: 40～55mm

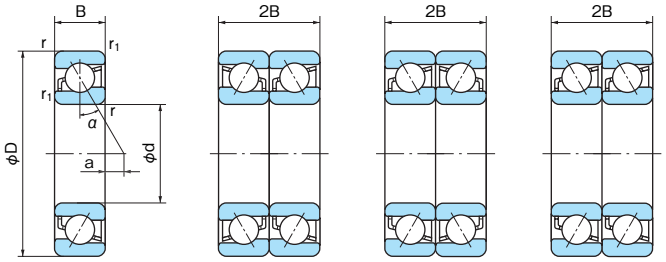


Single DB (Back-to-back) DF (Face-to-face) DT (Tandem)

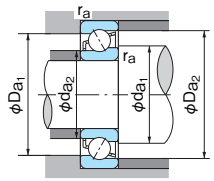


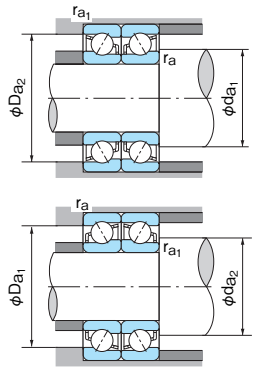


■Dynamic equivalent radial load

Pr＝XFr＋YFa

| Contact angle | iFa/Cor | e | Single or DT Fa/Fr > e X | Single or DT Fa/Fr > e Y | DB or DF Fa/Fr ≦ e X | DB or DF Fa/Fr ≦ e Y | DB or DF Fa/Fr > e X | DB or DF Fa/Fr > e Y |
|---|---|---|---|---|---|---|---|---|
| 15° | 0.015 | 0.38 | | 1.47 | | 1.65 | | 2.39 |
| | 0.029 | 0.40 | 0.44 | 1.40 | 1 | 1.57 | 0.72 | 2.28 |
| | 0.058 | 0.43 | | 1.30 | | 1.46 | | 2.11 |
| | 0.087 | 0.46 | | 1.23 | | 1.38 | | 2.00 |
| | 0.12 | 0.47 | 0.44 | 1.19 | 1 | 1.34 | 0.72 | 1.93 |
| | 0.17 | 0.50 | | 1.12 | | 1.26 | | 1.82 |
| | 0.29 | 0.55 | | 1.02 | | 1.14 | | 1.66 |
| | 0.44 | 0.56 | 0.44 | 1.00 | 1 | 1.12 | 0.72 | 1.63 |
| | 0.58 | 0.56 | | 1.00 | | 1.12 | | 1.63 |
| 30° | — | 0.8 | 0.39 | 0.76 | 1 | 0.78 | 0.63 | 1.24 |
| 40° | — | 1.14 | 0.35 | 0.57 | 1 | 0.55 | 0.57 | 0.93 |

■i = 2 for DB or DF mounting
i = 1 for Single or DT mounting

■Single or DT mounting When Fa/Fr≦e, use Pr = Fr

■Static equivalent radial load

Por＝XoFr＋YoFa

| Contact angle | Single or DT $X_0$ | Single or DT $Y_0$ | DB or DF $X_0$ | DB or DF $Y_0$ |
|---|---|---|---|---|
| 15° | 0.5 | 0.46 | 1 | 0.92 |
| 30° | 0.5 | 0.33 | 1 | 0.66 |
| 40° | 0.5 | 0.26 | 1 | 0.52 |

Single or DT mounting When Por＜Fr, use Pr = Fr

1N=0.102kgf

| Boundary dimensions (mm) d | D | B | r (min) | r1 (min) | Load center (mm) a | Bearing No. Single | Duplex | | | Basic dynamic load rating Cr (N) Single | Duplex | Basic static load rating Cor (N) Single | Duplex | Limiting speed (min-1) Grease lubrication Single | Grease lubrication Duplex | Oil lubrication Single | Oil lubrication Duplex | Abutment and fillet dimensions (mm) da1 (min) | da2 (min) | Da1 (max) | Da2 (max) | ra (max) | ra1 (max) | Mass (kg) Single | Bearing No. |
|---|---|---|---|---|---|---|---|---|---|---|---|---|---|---|---|---|---|---|---|---|---|---|---|---|---|
| 40 | 68 | 15 | 1 | 0.6 | 8.2 | 7008 | 7008DB | 7008DF | 7008DT | 18800 | 30500 | 14500 | 29000 | 8500 | 6600 | 11000 | 9000 | 45 | 45 | 63 | 65 | 1 | 0.6 | 0.210 | 7008 |
| | 68 | 15 | 1 | 0.6 | –1.3 | 7008C | 7008CDB | 7008CDF | 7008CDT | 20700 | 33500 | 16000 | 32000 | 15000 | 12000 | 20000 | 16000 | 45 | 45 | 63 | 65 | 1 | 0.6 | 0.210 | 7008C |
| | 80 | 18 | 1.1 | 0.6 | 8.3 | 7208 | 7208DB | 7208DF | 7208DT | 35000 | 57500 | 25200 | 50500 | 7500 | 6000 | 10000 | 8000 | 47 | 45 | 73 | 75 | 1 | 0.6 | 0.380 | 7208 |
| | 80 | 18 | 1.1 | 0.6 | 16.2 | 7208B | 7208BDB | 7208BDF | 7208BDT | 33000 | 54000 | 23700 | 47500 | 6700 | 5300 | 9200 | 7200 | 47 | 45 | 73 | 75 | 1 | 0.6 | 0.380 | 7208B |
| | 80 | 18 | 1.1 | 0.6 | –2.1 | 7208C | 7208CDB | 7208CDF | 7208CDT | 36500 | 59500 | 25400 | 50500 | 13000 | 10000 | 18000 | 14000 | 47 | 47 | 73 | 75 | 1 | 0.6 | 0.380 | 7208C |
| | 90 | 23 | 1.5 | 1 | 7.3 | 7308 | 7308DB | 7308DF | 7308DT | 49000 | 79000 | 33000 | 66000 | 7000 | 5500 | 9200 | 7500 | 49 | 45 | 81 | 84.6 | 1.5 | 1 | 0.655 | 7308 |
| | 90 | 23 | 1.5 | 1 | 15.8 | 7308B | 7308BDB | 7308BDF | 7308BDT | 46000 | 75000 | 31000 | 62500 | 6300 | 5000 | 8500 | 6700 | 49 | 45 | 81 | 84.6 | 1.5 | 1 | 0.655 | 7308B |
| | 90 | 23 | 1.5 | 1 | –4.0 | 7308C | 7308CDB | 7308CDF | 7308CDT | 49500 | 80500 | 32500 | 65500 | 12000 | 9600 | 17000 | 13000 | 49 | 49 | 81 | 84.6 | 1.5 | 1 | 0.655 | 7308C |
| 45 | 75 | 16 | 1 | 0.6 | 9.3 | 7009 | 7009DB | 7009DF | 7009DT | 22200 | 36000 | 17600 | 35000 | 7500 | 6000 | 10000 | 8000 | 50 | 50 | 70 | 72 | 1 | 0.6 | 0.265 | 7009 |
| | 75 | 16 | 1 | 0.6 | –1.1 | 7009C | 7009CDB | 7009CDF | 7009CDT | 24600 | 40000 | 19400 | 39000 | 13000 | 10000 | 18000 | 14000 | 50 | 50 | 70 | 72 | 1 | 0.6 | 0.265 | 7009C |
| | 85 | 19 | 1.1 | 0.6 | 9.3 | 7209 | 7209DB | 7209DF | 7209DT | 39500 | 64500 | 28800 | 57500 | 7000 | 5500 | 9200 | 7500 | 52 | 50 | 78 | 80 | 1 | 0.6 | 0.430 | 7209 |
| | 85 | 19 | 1.1 | 0.6 | 17.8 | 7209B | 7209BDB | 7209BDF | 7209BDT | 37000 | 60500 | 27100 | 54000 | 6300 | 5000 | 8500 | 6700 | 52 | 50 | 78 | 80 | 1 | 0.6 | 0.430 | 7209B |
| | 85 | 19 | 1.1 | 0.6 | –2.0 | 7209C | 7209CDB | 7209CDF | 7209CDT | 41000 | 66500 | 29000 | 58000 | 12000 | 9600 | 17000 | 13000 | 52 | 52 | 78 | 80 | 1 | 0.6 | 0.430 | 7209C |
| | 100 | 25 | 1.5 | 1 | 8.4 | 7309 | 7309DB | 7309DF | 7309DT | 63500 | 103000 | 43500 | 87000 | 6300 | 5000 | 8500 | 6700 | 54 | 50 | 91 | 94.6 | 1.5 | 1 | 0.875 | 7309 |
| | 100 | 25 | 1.5 | 1 | 18.0 | 7309B | 7309BDB | 7309BDF | 7309BDT | 60000 | 97500 | 41500 | 82500 | 5600 | 4500 | 7500 | 6000 | 54 | 50 | 91 | 94.6 | 1.5 | 1 | 0.875 | 7309B |
| | 100 | 25 | 1.5 | 1 | –4.1 | 7309C | 7309CDB | 7309CDF | 7309CDT | 63500 | 103000 | 43500 | 87000 | 11000 | 8800 | 15000 | 12000 | 54 | 54 | 91 | 94.6 | 1.5 | 1 | 0.875 | 7309C |
| 50 | 80 | 16 | 1 | 0.6 | 10.8 | 7010 | 7010DB | 7010DF | 7010DT | 23600 | 38500 | 20000 | 40000 | 7000 | 5500 | 9200 | 7500 | 55 | 55 | 75 | 77 | 1 | 0.6 | 0.285 | 7010 |
| | 80 | 16 | 1 | 0.6 | –0.5 | 7010C | 7010CDB | 7010CDF | 7010CDT | 26200 | 42500 | 22000 | 44000 | 12000 | 9600 | 17000 | 13000 | 55 | 55 | 75 | 77 | 1 | 0.6 | 0.285 | 7010C |
| | 90 | 20 | 1.1 | 0.6 | 10.2 | 7210 | 7210DB | 7210DF | 7210DT | 41000 | 67000 | 31500 | 63000 | 6300 | 5300 | 8500 | 6700 | 57 | 55 | 83 | 85 | 1 | 0.6 | 0.485 | 7210 |
| | 90 | 20 | 1.1 | 0.6 | 19.4 | 7210B | 7210BDB | 7210BDF | 7210BDT | 38500 | 63000 | 29600 | 59000 | 5600 | 4500 | 7500 | 6000 | 57 | 55 | 83 | 85 | 1 | 0.6 | 0.485 | 7210B |
| | 90 | 20 | 1.1 | 0.6 | –1.9 | 7210C | 7210CDB | 7210CDF | 7210CDT | 43000 | 70000 | 32000 | 63500 | 11000 | 8800 | 16000 | 13000 | 57 | 57 | 83 | 85 | 1 | 0.6 | 0.485 | 7210C |
| | 110 | 27 | 2 | 1 | 9.6 | 7310 | 7310DB | 7310DF | 7310DT | 74000 | 121000 | 52000 | 104000 | 5600 | 4500 | 7500 | 6000 | 60 | 56 | 100 | 104 | 2 | 1 | 1.14 | 7310 |
| | 110 | 27 | 2 | 1 | 20.1 | 7310B | 7310BDB | 7310BDF | 7310BDT | 70500 | 114000 | 49500 | 98500 | 5000 | 4000 | 6700 | 5300 | 60 | 56 | 100 | 104 | 2 | 1 | 1.14 | 7310B |
| | 110 | 27 | 2 | 1 | –4.3 | 7310C | 7310CDB | 7310CDF | 7310CDT | 75500 | 122000 | 51000 | 102000 | 10000 | 8000 | 14000 | 11000 | 60 | 60 | 100 | 104 | 2 | 1 | 1.14 | 7310C |
| 55 | 90 | 18 | 1.1 | 0.6 | 11.9 | 7011 | 7011DB | 7011DF | 7011DT | 31000 | 50500 | 26200 | 52500 | 6300 | 5000 | 8500 | 6700 | 61 | 61 | 84 | 86 | 1 | 0.6 | 0.420 | 7011 |
| | 90 | 18 | 1.1 | 0.6 | –0.6 | 7011C | 7011CDB | 7011CDF | 7011CDT | 34500 | 56000 | 28800 | 57500 | 11000 | 8800 | 15000 | 12000 | 61 | 61 | 84 | 86 | 1 | 0.6 | 0.420 | 7011C |
| | 100 | 21 | 1.5 | 1 | 11.9 | 7211 | 7211DB | 7211DF | 7211DT | 51000 | 83000 | 39500 | 79000 | 6000 | 4500 | 7500 | 6300 | 64 | 60 | 91 | 94.6 | 1.5 | 1 | 0.635 | 7211 |
| | 100 | 21 | 1.5 | 1 | 22.1 | 7211B | 7211BDB | 7211BDF | 7211BDT | 48000 | 78000 | 37500 | 74500 | 5300 | 4000 | 7000 | 5500 | 64 | 60 | 91 | 94.6 | 1.5 | 1 | 0.635 | 7211B |
| | 100 | 21 | 1.5 | 1 | –1.6 | 7211C | 7211CDB | 7211CDF | 7211CDT | 53000 | 86500 | 40000 | 80000 | 10000 | 8000 | 14000 | 11000 | 64 | 64 | 91 | 94.6 | 1.5 | 1 | 0.635 | 7211C |
| | 120 | 29 | 2 | 1 | 10.8 | 7311 | 7311DB | 7311DF | 7311DT | 85500 | 139000 | 61500 | 123000 | 5000 | 4000 | 7000 | 5500 | 65 | 61 | 110 | 114 | 2 | 1 | 1.45 | 7311 |
| | 120 | 29 | 2 | 1 | 22.3 | 7311B | 7311BDB | 7311BDF | 7311BDT | 81000 | 132000 | 58000 | 116000 | 4500 | 3500 | 6200 | 5000 | 65 | 61 | 110 | 114 | 2 | 1 | 1.45 | 7311B |
| | 120 | 29 | 2 | 1 | –4.4 | 7311C | 7311CDB | 7311CDF | 7311CDT | 87000 | 142000 | 60000 | 121000 | 9100 | 7300 | 13000 | 10000 | 65 | 65 | 110 | 114 | 2 | 1 | 1.45 | 7311C |

Remarks: 1. “a” means the distance between back face and load center.
2. See page 122 regarding limiting speeds.

# Angular Contact Ball Bearings Single Mounting / Duplex Mounting

Bore Diameter: 60～75mm

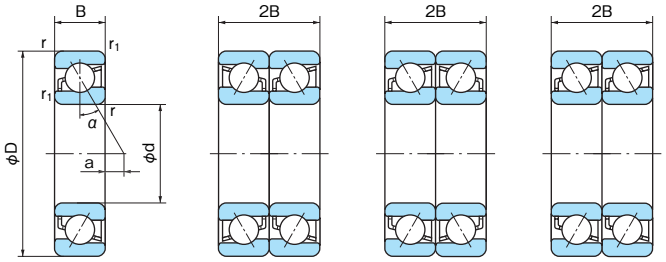


Single | DB (Back-to-back) | DF (Face-to-face) | DT (Tandem)

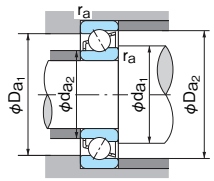


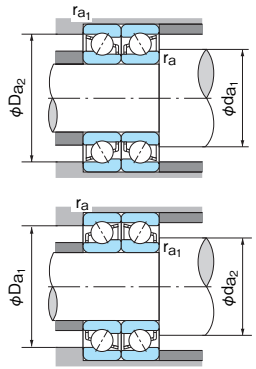


■Dynamic equivalent radial load

Pr=XFr+YFa

| Contact angle | iFa/Cor | e | Single or DT Fa/Fr > e X | Single or DT Fa/Fr > e Y | DB or DF Fa/Fr ≦ e X | DB or DF Fa/Fr ≦ e Y | DB or DF Fa/Fr > e X | DB or DF Fa/Fr > e Y |
|---|---|---|---|---|---|---|---|---|
| 15° | 0.015 | 0.38 | | 1.47 | | 1.65 | | 2.39 |
| | 0.029 | 0.40 | 0.44 | 1.40 | 1 | 1.57 | 0.72 | 2.28 |
| | 0.058 | 0.43 | | 1.30 | | 1.46 | | 2.11 |
| | 0.087 | 0.46 | | 1.23 | | 1.38 | | 2.00 |
| | 0.12 | 0.47 | 0.44 | 1.19 | 1 | 1.34 | 0.72 | 1.93 |
| | 0.17 | 0.50 | | 1.12 | | 1.26 | | 1.82 |
| | 0.29 | 0.55 | | 1.02 | | 1.14 | | 1.66 |
| | 0.44 | 0.56 | 0.44 | 1.00 | 1 | 1.12 | 0.72 | 1.63 |
| | 0.58 | 0.56 | | 1.00 | | 1.12 | | 1.63 |
| 30° | — | 0.8 | 0.39 | 0.76 | 1 | 0.78 | 0.63 | 1.24 |
| 40° | — | 1.14 | 0.35 | 0.57 | 1 | 0.55 | 0.57 | 0.93 |

■i = 2 for DB or DF mounting
i = 1 for Single or DT mounting

■Single or DT mounting When Fa/Fr≦e, use Pr = Fr

■Static equivalent radial load

Por=XoFr+YoFa

| Contact angle | Single or DT $X_0$ | Single or DT $Y_0$ | DB or DF $X_0$ | DB or DF $Y_0$ |
|---|---|---|---|---|
| 15° | 0.5 | 0.46 | 1 | 0.92 |
| 30° | 0.5 | 0.33 | 1 | 0.66 |
| 40° | 0.5 | 0.26 | 1 | 0.52 |

Single or DT mounting When Por<Fr, use Pr = Fr

1N=0.102kgf

| Boundary dimensions (mm) d | D | B | r (min) | r1 (min) | Load center (mm) a | Bearing No. Single | Duplex | | | Basic dynamic load rating Cr (N) Single | Duplex | Basic static load rating Cor (N) Single | Duplex | Limiting speed (min-1) Grease lubrication Single | Grease lubrication Duplex | Oil lubrication Single | Oil lubrication Duplex | Abutment and fillet dimensions (mm) da1 (min) | da2 (min) | Da1 (max) | Da2 (max) | ra (max) | ra1 (max) | Mass (kg) Single | Bearing No. |
|---|---|---|---|---|---|---|---|---|---|---|---|---|---|---|---|---|---|---|---|---|---|---|---|---|---|
| 60 | 95 | 18 | 1.1 | 0.6 | 13.4 | 7012 | 7012DB | 7012DF | 7012DT | 32000 | 51500 | 28000 | 56000 | 6000 | 4500 | 7600 | 6200 | 66 | 66 | 89 | 91 | 1 | 0.6 | 0.450 | 7012 |
| | 95 | 18 | 1.1 | 0.6 | –0.1 | 7012C | 7012CDB | 7012CDF | 7012CDT | 35500 | 57500 | 30500 | 61500 | 10000 | 8000 | 14000 | 11000 | 66 | 66 | 89 | 91 | 1 | 0.6 | 0.450 | 7012C |
| | 110 | 22 | 1.5 | 1 | 13.5 | 7212 | 7212DB | 7212DF | 7212DT | 62000 | 100000 | 48500 | 97500 | 5300 | 4300 | 7100 | 5600 | 69 | 65 | 101 | 104.6 | 1.5 | 1 | 0.820 | 7212 |
| | 110 | 22 | 1.5 | 1 | 24.7 | 7212B | 7212BDB | 7212BDF | 7212BDT | 58000 | 94000 | 46000 | 92000 | 4800 | 3800 | 6300 | 5000 | 69 | 65 | 101 | 104.6 | 1.5 | 1 | 0.820 | 7212B |
| | 110 | 22 | 1.5 | 1 | –1.2 | 7212C | 7212CDB | 7212CDF | 7212CDT | 64500 | 105000 | 49500 | 98500 | 9400 | 7500 | 13000 | 10000 | 69 | 69 | 101 | 104.6 | 1.5 | 1 | 0.820 | 7212C |
| | 130 | 31 | 2.1 | 1.1 | 11.9 | 7312 | 7312DB | 7312DF | 7312DT | 98000 | 159000 | 71500 | 148000 | 4800 | 3800 | 6300 | 5000 | 72 | 67 | 118 | 123 | 2 | 1 | 1.81 | 7312 |
| | 130 | 31 | 2.1 | 1.1 | 24.4 | 7312B | 7312BDB | 7312BDF | 7312BDT | 92500 | 151000 | 67500 | 135000 | 4300 | 3400 | 5500 | 4500 | 72 | 67 | 118 | 123 | 2 | 1 | 1.81 | 7312B |
| | 130 | 31 | 2.1 | 1.1 | –4.5 | 7312C | 7312CDB | 7312CDF | 7312CDT | 99500 | 162000 | 70000 | 140000 | 8400 | 6700 | 12000 | 9600 | 72 | 72 | 118 | 123 | 2 | 1 | 1.81 | 7312C |
| 65 | 100 | 18 | 1.1 | 0.6 | 14.8 | 7013 | 7013DB | 7013DF | 7013DT | 33500 | 54500 | 31000 | 62500 | 5600 | 4300 | 7100 | 6000 | 71 | 71 | 94 | 96 | 1 | 0.6 | 0.470 | 7013 |
| | 100 | 18 | 1.1 | 0.6 | 0.5 | 7013C | 7013CDB | 7013CDF | 7013CDT | 37500 | 60500 | 34500 | 69000 | 9700 | 7800 | 13000 | 10000 | 71 | 71 | 94 | 96 | 1 | 0.6 | 0.470 | 7013C |
| | 120 | 23 | 1.5 | 1 | 15.2 | 7213 | 7213DB | 7213DF | 7213DT | 70000 | 114000 | 57800 | 116000 | 4900 | 3900 | 6500 | 5300 | 74 | 70 | 111 | 114.6 | 1.5 | 1 | 1.02 | 7213 |
| | 120 | 23 | 1.5 | 1 | 27.4 | 7213B | 7213BDB | 7213BDF | 7213BDT | 66000 | 107000 | 54500 | 109000 | 4300 | 3400 | 5600 | 4600 | 74 | 70 | 111 | 114.6 | 1.5 | 1 | 1.02 | 7213B |
| | 120 | 23 | 1.5 | 1 | –0.8 | 7213C | 7213CDB | 7213CDF | 7213CDT | 73500 | 120000 | 59000 | 118000 | 8600 | 6900 | 12000 | 9600 | 74 | 74 | 111 | 114.6 | 1.5 | 1 | 1.02 | 7213C |
| | 140 | 33 | 2.1 | 1.1 | 13.1 | 7313 | 7313DB | 7313DF | 7313DT | 111000 | 180000 | 82000 | 165000 | 4400 | 3600 | 5800 | 4700 | 77 | 72 | 128 | 133 | 2 | 1 | 2.22 | 7313 |
| | 140 | 33 | 2.1 | 1.1 | 26.6 | 7313B | 7313BDB | 7313BDF | 7313BDT | 105000 | 170000 | 77500 | 155000 | 4000 | 3200 | 5300 | 4200 | 77 | 72 | 128 | 133 | 2 | 1 | 2.22 | 7313B |
| | 140 | 33 | 2.1 | 1.1 | –4.7 | 7313C | 7313CDB | 7313CDF | 7313CDT | 113000 | 183000 | 81000 | 162000 | 7800 | 6200 | 11000 | 8800 | 77 | 77 | 128 | 133 | 2 | 1 | 2.22 | 7313C |
| 70 | 110 | 20 | 1.1 | 0.6 | 16.0 | 7014 | 7014DB | 7014DF | 7014DT | 42500 | 69000 | 39500 | 78500 | 5000 | 4000 | 6600 | 5300 | 76 | 76 | 104 | 106 | 1 | 0.6 | 0.660 | 7014 |
| | 110 | 20 | 1.1 | 0.6 | 0.4 | 7014C | 7014CDB | 7014CDF | 7014CDT | 47000 | 76500 | 43000 | 86500 | 8900 | 7100 | 12000 | 9600 | 76 | 76 | 104 | 106 | 1 | 0.6 | 0.660 | 7014C |
| | 125 | 24 | 1.5 | 1 | 16.1 | 7214 | 7214DB | 7214DF | 7214DT | 76500 | 124000 | 63500 | 127000 | 4500 | 3800 | 6300 | 5000 | 79 | 75 | 116 | 119.6 | 1.5 | 1 | 1.12 | 7214 |
| | 125 | 24 | 1.5 | 1 | 29.0 | 7214B | 7214BDB | 7214BDF | 7214BDT | 71500 | 116000 | 59500 | 120000 | 4300 | 3200 | 5600 | 4500 | 79 | 75 | 116 | 119.6 | 1.5 | 1 | 1.12 | 7214B |
| | 125 | 24 | 1.5 | 1 | –0.7 | 7214C | 7214CDB | 7214CDF | 7214CDT | 80000 | 130000 | 65000 | 130000 | 8200 | 6600 | 11000 | 8800 | 79 | 79 | 116 | 119.6 | 1.5 | 1 | 1.12 | 7214C |
| | 150 | 35 | 2.1 | 1.1 | 14.3 | 7314 | 7314DB | 7314DF | 7314DT | 125000 | 203000 | 94000 | 188000 | 4000 | 3200 | 5300 | 4300 | 82 | 77 | 138 | 143 | 2 | 1 | 2.70 | 7314 |
| | 150 | 35 | 2.1 | 1.1 | 28.7 | 7314B | 7314BDB | 7314BDF | 7314BDT | 118000 | 191000 | 88500 | 177000 | 3600 | 2900 | 4800 | 3900 | 82 | 77 | 138 | 143 | 2 | 1 | 2.70 | 7314B |
| | 150 | 35 | 2.1 | 1.1 | –4.8 | 7314C | 7314CDB | 7314CDF | 7314CDT | 127000 | 206000 | 92500 | 185000 | 7300 | 5800 | 10000 | 8000 | 82 | 82 | 138 | 143 | 2 | 1 | 2.70 | 7314C |
| 75 | 115 | 20 | 1.1 | 0.6 | 17.4 | 7015 | 7015DB | 7015DF | 7015DT | 43500 | 70500 | 41500 | 83000 | 4800 | 3800 | 6300 | 5000 | 81 | 81 | 109 | 111 | 1 | 0.6 | 0.695 | 7015 |
| | 115 | 20 | 1.1 | 0.6 | 1.0 | 7015C | 7015CDB | 7015CDF | 7015CDT | 48500 | 78500 | 46000 | 92000 | 8400 | 6700 | 12000 | 9600 | 81 | 81 | 109 | 111 | 1 | 0.6 | 0.695 | 7015C |
| | 130 | 25 | 1.5 | 1 | 17.1 | 7215 | 7215DB | 7215DF | 7215DT | 79000 | 129000 | 68500 | 137000 | 4300 | 3400 | 5800 | 4700 | 84 | 80 | 121 | 124.6 | 1.5 | 1 | 1.23 | 7215 |
| | 130 | 25 | 1.5 | 1 | 30.6 | 7215B | 7215BDB | 7215BDF | 7215BDT | 74000 | 120000 | 64000 | 128000 | 4000 | 3200 | 5300 | 4300 | 84 | 80 | 121 | 124.6 | 1.5 | 1 | 1.23 | 7215B |
| | 130 | 25 | 1.5 | 1 | –0.7 | 7215C | 7215CDB | 7215CDF | 7215CDT | 83500 | 135000 | 70000 | 141000 | 7800 | 6200 | 11000 | 8800 | 84 | 84 | 121 | 124.6 | 1.5 | 1 | 1.23 | 7215C |
| | 160 | 37 | 2.1 | 1.1 | 15.4 | 7315 | 7315DB | 7315DF | 7315DT | 136000 | 221000 | 106000 | 212000 | 3800 | 3000 | 5000 | 4000 | 87 | 82 | 148 | 153 | 2 | 1 | 3.15 | 7315 |
| | 160 | 37 | 2.1 | 1.1 | 30.9 | 7315B | 7315BDB | 7315BDF | 7315BDT | 128000 | 208000 | 100000 | 200000 | 3400 | 2700 | 4500 | 3600 | 87 | 82 | 148 | 153 | 2 | 1 | 3.15 | 7315B |
| | 160 | 37 | 2.1 | 1.1 | –4.9 | 7315C | 7315CDB | 7315CDF | 7315CDT | 138000 | 225000 | 104000 | 209000 | 6800 | 5400 | 9400 | 7500 | 87 | 87 | 148 | 153 | 2 | 1 | 3.15 | 7315C |

Remarks: 1. "a" means the distance between back face and load center.
2. See page 122 regarding limiting speeds.

# Angular Contact Ball Bearings Single Mounting / Duplex Mounting

Bore Diameter: 80～95mm

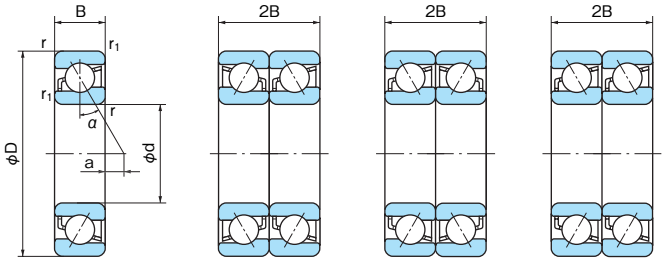


Single | DB (Back-to-back) | DF (Face-to-face) | DT (Tandem)

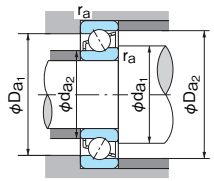


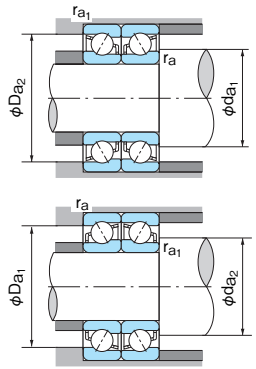


■Dynamic equivalent radial load

Pr=XFr+YFa

| Contact angle | iFa/Cor | e | Single or DT Fa/Fr > e X | Single or DT Fa/Fr > e Y | DB or DF Fa/Fr ≦ e X | DB or DF Fa/Fr ≦ e Y | DB or DF Fa/Fr > e X | DB or DF Fa/Fr > e Y |
|---|---|---|---|---|---|---|---|---|
| 15° | 0.015 | 0.38 | | 1.47 | | 1.65 | | 2.39 |
| | 0.029 | 0.40 | 0.44 | 1.40 | 1 | 1.57 | 0.72 | 2.28 |
| | 0.058 | 0.43 | | 1.30 | | 1.46 | | 2.11 |
| | 0.087 | 0.46 | | 1.23 | | 1.38 | | 2.00 |
| | 0.12 | 0.47 | 0.44 | 1.19 | 1 | 1.34 | 0.72 | 1.93 |
| | 0.17 | 0.50 | | 1.12 | | 1.26 | | 1.82 |
| | 0.29 | 0.55 | | 1.02 | | 1.14 | | 1.66 |
| | 0.44 | 0.56 | 0.44 | 1.00 | 1 | 1.12 | 0.72 | 1.63 |
| | 0.58 | 0.56 | | 1.00 | | 1.12 | | 1.63 |
| 30° | — | 0.8 | 0.39 | 0.76 | 1 | 0.78 | 0.63 | 1.24 |
| 40° | — | 1.14 | 0.35 | 0.57 | 1 | 0.55 | 0.57 | 0.93 |

■i = 2 for DB or DF mounting
i = 1 for Single or DT mounting

■Single or DT mounting When Fa/Fr≦e, use Pr = Fr

■Static equivalent radial load

Por=XoFr+YoFa

| Contact angle | Single or DT $X_0$ | Single or DT $Y_0$ | DB or DF $X_0$ | DB or DF $Y_0$ |
|---|---|---|---|---|
| 15° | 0.5 | 0.46 | 1 | 0.92 |
| 30° | 0.5 | 0.33 | 1 | 0.66 |
| 40° | 0.5 | 0.26 | 1 | 0.52 |

Single or DT mounting When Por<Fr, use Pr = Fr

1N=0.102kgf

| Boundary dimensions (mm) d | D | B | r (min) | r1 (min) | Load center (mm) a | Bearing No. Single | Duplex | | | Basic dynamic load rating Cr (N) Single | Duplex | Basic static load rating Cor (N) Single | Duplex | Limiting speed (min-1) Grease lubrication Single | Grease lubrication Duplex | Oil lubrication Single | Oil lubrication Duplex | Abutment and fillet dimensions (mm) da1 (min) | da2 (min) | Da1 (max) | Da2 (max) | ra (max) | ra1 (max) | Mass (kg) Single | Bearing No. |
|---|---|---|---|---|---|---|---|---|---|---|---|---|---|---|---|---|---|---|---|---|---|---|---|---|---|
| 80 | 125 | 22 | 1.1 | 0.6 | 18.6 | 7016 | 7016DB | 7016DF | 7016DT | 53500 | 86500 | 50500 | 101000 | 4400 | 3500 | 5800 | 4600 | 86 | 86 | 119 | 121 | 1 | 0.6 | 0.925 | 7016 |
| | 125 | 22 | 1.1 | 0.6 | 0.8 | 7016C | 7016CDB | 7016CDF | 7016CDT | 59000 | 96000 | 55500 | 111000 | 7800 | 6200 | 11000 | 8800 | 86 | 86 | 119 | 121 | 1 | 0.6 | 0.925 | 7016C |
| | 140 | 26 | 2 | 1 | 18.8 | 7216 | 7216DB | 7216DF | 7216DT | 89000 | 145000 | 76500 | 153000 | 4000 | 3200 | 5400 | 4300 | 90 | 86 | 130 | 134 | 2 | 1 | 1.50 | 7216 |
| | 140 | 26 | 2 | 1 | 33.2 | 7216B | 7216BDB | 7216BDF | 7216BDT | 83500 | 135000 | 71500 | 143000 | 3600 | 2800 | 5000 | 4000 | 90 | 86 | 130 | 134 | 2 | 1 | 1.50 | 7216B |
| | 140 | 26 | 2 | 1 | –0.3 | 7216C | 7216CDB | 7216CDF | 7216CDT | 93500 | 152000 | 78000 | 156000 | 7300 | 5800 | 10000 | 8000 | 90 | 90 | 130 | 134 | 2 | 1 | 1.50 | 7216C |
| | 170 | 39 | 2.1 | 1.1 | 16.6 | 7316 | 7316DB | 7316DF | 7316DT | 147000 | 239000 | 119000 | 238000 | 3600 | 2800 | 4800 | 3800 | 92 | 87 | 158 | 163 | 2 | 1 | 4.18 | 7316 |
| | 170 | 39 | 2.1 | 1.1 | 33.0 | 7316B | 7316BDB | 7316BDF | 7316BDT | 139000 | 226000 | 112000 | 225000 | 3200 | 2500 | 4200 | 3400 | 92 | 87 | 158 | 163 | 2 | 1 | 4.18 | 7316B |
| | 170 | 39 | 2.1 | 1.1 | –5.1 | 7316C | 7316CDB | 7316CDF | 7316CDT | 150000 | 243000 | 117000 | 235000 | 6400 | 5100 | 8800 | 7000 | 92 | 92 | 158 | 163 | 2 | 1 | 4.18 | 7316C |
| 85 | 130 | 22 | 1.1 | 0.6 | 20 | 7017 | 7017DB | 7017DF | 7017DT | 54500 | 88500 | 53500 | 107000 | 4100 | 3300 | 5500 | 4400 | 91 | 91 | 124 | 126 | 1 | 0.6 | 0.960 | 7017 |
| | 130 | 22 | 1.1 | 0.6 | 1.4 | 7017C | 7017CDB | 7017CDF | 7017CDT | 60500 | 98500 | 59000 | 118000 | 7400 | 5900 | 10000 | 8000 | 91 | 91 | 124 | 126 | 1 | 0.6 | 0.960 | 7017C |
| | 150 | 28 | 2 | 1 | 19.9 | 7217 | 7217DB | 7217DF | 7217DT | 103000 | 167000 | 89500 | 179000 | 3800 | 3000 | 5000 | 4000 | 95 | 91 | 140 | 144 | 2 | 1 | 1.87 | 7217 |
| | 150 | 28 | 2 | 1 | 35.4 | 7217B | 7217BDB | 7217BDF | 7217BDT | 96500 | 159000 | 83500 | 168000 | 3400 | 2600 | 4500 | 3800 | 95 | 91 | 140 | 144 | 2 | 1 | 1.87 | 7217B |
| | 150 | 28 | 2 | 1 | –0.4 | 7217C | 7217CDB | 7217CDF | 7217CDT | 100000 | 163000 | 85000 | 170000 | 6800 | 5400 | 9400 | 7500 | 95 | 95 | 140 | 144 | 2 | 1 | 1.87 | 7217C |
| | 180 | 41 | 3 | 1.1 | 17.7 | 7317 | 7317DB | 7317DF | 7317DT | 159000 | 258000 | 133000 | 266000 | 3400 | 2600 | 4500 | 3600 | 99 | 92 | 166 | 173 | 2.5 | 1 | 4.90 | 7317 |
| | 180 | 41 | 3 | 1.1 | 35.2 | 7317B | 7317BDB | 7317BDF | 7317BDT | 150000 | 244000 | 125000 | 251000 | 3000 | 2400 | 4000 | 3200 | 99 | 92 | 166 | 173 | 2.5 | 1 | 4.90 | 7317B |
| | 180 | 41 | 3 | 1.1 | –5.2 | 7317C | 7317CDB | 7317CDF | 7317CDT | 162000 | 263000 | 131000 | 262000 | 6000 | 4800 | 8300 | 6600 | 99 | 99 | 166 | 173 | 2.5 | 1 | 4.90 | 7317C |
| 90 | 140 | 24 | 1.5 | 1 | 21.2 | 7018 | 7018DB | 7018DF | 7018DT | 65000 | 106000 | 63000 | 126000 | 3800 | 3200 | 5200 | 4200 | 97 | 97 | 133 | 135.6 | 1.5 | 1 | 1.26 | 7018 |
| | 140 | 24 | 1.5 | 1 | 1.3 | 7018C | 7018CDB | 7018CDF | 7018CDT | 72000 | 117000 | 69500 | 139000 | 7000 | 5600 | 9600 | 7800 | 97 | 97 | 133 | 135.6 | 1.5 | 1 | 1.26 | 7018C |
| | 160 | 30 | 2 | 1 | 21.1 | 7218 | 7218DB | 7218DF | 7218DT | 118000 | 191000 | 103000 | 206000 | 3500 | 2800 | 4700 | 3700 | 100 | 96 | 150 | 154 | 2 | 1 | 2.30 | 7218 |
| | 160 | 30 | 2 | 1 | 37.5 | 7218B | 7218BDB | 7218BDF | 7218BDT | 110000 | 179000 | 97000 | 194000 | 3200 | 2500 | 4300 | 3400 | 100 | 96 | 150 | 154 | 2 | 1 | 2.30 | 7218B |
| | 160 | 30 | 2 | 1 | –0.6 | 7218C | 7218CDB | 7218CDF | 7218CDT | 124000 | 201000 | 105000 | 211000 | 6400 | 5100 | 8800 | 7000 | 100 | 100 | 150 | 154 | 2 | 1 | 2.30 | 7218C |
| | 190 | 43 | 3 | 1.1 | 18.9 | 7318 | 7318DB | 7318DF | 7318DT | 171000 | 277000 | 147000 | 295000 | 3200 | 2600 | 4300 | 3400 | 104 | 97 | 176 | 183 | 2.5 | 1 | 5.76 | 7318 |
| | 190 | 43 | 3 | 1.1 | 37.3 | 7318B | 7318BDB | 7318BDF | 7318BDT | 161000 | 262000 | 139000 | 278000 | 2800 | 2300 | 3800 | 3000 | 104 | 97 | 176 | 183 | 2.5 | 1 | 5.76 | 7318B |
| | 190 | 43 | 3 | 1.1 | –5.3 | 7318C | 7318CDB | 7318CDF | 7318CDT | 174000 | 282000 | 146000 | 291000 | 5700 | 4600 | 7900 | 6300 | 104 | 104 | 176 | 183 | 2.5 | 1 | 5.76 | 7318C |
| 95 | 145 | 24 | 1.5 | 1 | 22.6 | 7019 | 7019DB | 7019DF | 7019DT | 67000 | 109000 | 66500 | 133000 | 3800 | 3100 | 5200 | 4200 | 102 | 102 | 138 | 140.6 | 1.5 | 1 | 1.36 | 7019 |
| | 145 | 24 | 1.5 | 1 | 1.9 | 7019C | 7019CDB | 7019CDF | 7019CDT | 74000 | 120000 | 73500 | 147000 | 6700 | 5400 | 9200 | 7400 | 102 | 102 | 138 | 140.6 | 1.5 | 1 | 1.36 | 7019C |
| | 170 | 32 | 2.1 | 1.1 | 22.2 | 7219 | 7219DB | 7219DF | 7219DT | 126000 | 205000 | 112000 | 225000 | 3400 | 2600 | 4500 | 3600 | 107 | 102 | 158 | 163 | 2 | 1 | 2.78 | 7219 |
| | 170 | 32 | 2.1 | 1.1 | 39.7 | 7219B | 7219BDB | 7219BDF | 7219BDT | 120000 | 195000 | 105000 | 210000 | 3000 | 2400 | 4000 | 3200 | 107 | 102 | 158 | 163 | 2 | 1 | 2.78 | 7219B |
| | 170 | 32 | 2.1 | 1.1 | –0.7 | 7219C | 7219CDB | 7219CDF | 7219CDT | 133000 | 217000 | 115000 | 230000 | 6000 | 4800 | 8300 | 6600 | 107 | 107 | 158 | 163 | 2 | 1 | 2.78 | 7219C |
| | 200 | 45 | 3 | 1.1 | 20.1 | 7319 | 7319DB | 7319DF | 7319DT | 183000 | 297000 | 163000 | 325000 | 3000 | 2400 | 4000 | 3200 | 109 | 102 | 186 | 193 | 2.5 | 1 | 6.68 | 7319 |
| | 200 | 45 | 3 | 1.1 | 39.5 | 7319B | 7319BDB | 7319BDF | 7319BDT | 172000 | 280000 | 153000 | 305000 | 2500 | 2200 | 3600 | 3000 | 109 | 102 | 186 | 193 | 2.5 | 1 | 6.68 | 7319B |
| | 200 | 45 | 3 | 1.1 | –5.5 | 7319C | 7319CDB | 7319CDF | 7319CDT | 186000 | 300000 | 161000 | 320000 | 5400 | 4300 | 7500 | 6000 | 109 | 109 | 186 | 193 | 2.5 | 1 | 6.68 | 7319C |

Remarks: 1. "a" means the distance between back face and load center.
2. See page 122 regarding limiting speeds.

# Angular Contact Ball Bearings Single Mounting / Duplex Mounting

Bore Diameter: 100～120mm

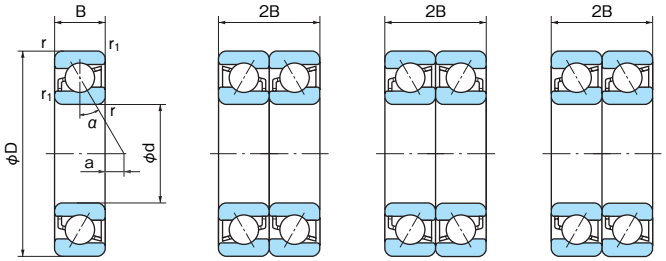


Single DB (Back-to-back) DF (Face-to-face) DT (Tandem)

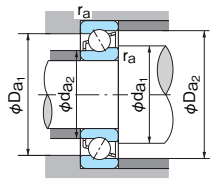


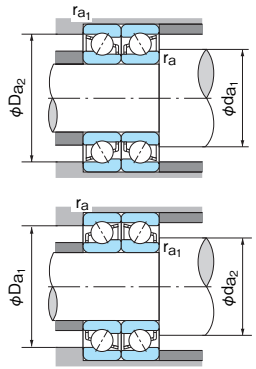


■Dynamic equivalent radial load

Pr=XFr+YFa

| Contact angle | iFa/Cor | e | Single or DT Fa/Fr > e X | Single or DT Fa/Fr > e Y | DB or DF Fa/Fr ≦ e X | DB or DF Fa/Fr ≦ e Y | DB or DF Fa/Fr > e X | DB or DF Fa/Fr > e Y |
|---|---|---|---|---|---|---|---|---|
| 15° | 0.015 | 0.38 | | 1.47 | | 1.65 | | 2.39 |
| | 0.029 | 0.40 | 0.44 | 1.40 | 1 | 1.57 | 0.72 | 2.28 |
| | 0.058 | 0.43 | | 1.30 | | 1.46 | | 2.11 |
| | 0.087 | 0.46 | | 1.23 | | 1.38 | | 2.00 |
| | 0.12 | 0.47 | 0.44 | 1.19 | 1 | 1.34 | 0.72 | 1.93 |
| | 0.17 | 0.50 | | 1.12 | | 1.26 | | 1.82 |
| | 0.29 | 0.55 | | 1.02 | | 1.14 | | 1.66 |
| | 0.44 | 0.56 | 0.44 | 1.00 | 1 | 1.12 | 0.72 | 1.63 |
| | 0.58 | 0.56 | | 1.00 | | 1.12 | | 1.63 |
| 30° | — | 0.8 | 0.39 | 0.76 | 1 | 0.78 | 0.63 | 1.24 |
| 40° | — | 1.14 | 0.35 | 0.57 | 1 | 0.55 | 0.57 | 0.93 |

■i = 2 for DB or DF mounting
i = 1 for Single or DT mounting

■Single or DT mounting When Fa/Fr≦e, use Pr = Fr

■Static equivalent radial load

Por=XoFr+YoFa

| Contact angle | Single or DT $X_0$ | Single or DT $Y_0$ | DB or DF $X_0$ | DB or DF $Y_0$ |
|---|---|---|---|---|
| 15° | 0.5 | 0.46 | 1 | 0.92 |
| 30° | 0.5 | 0.33 | 1 | 0.66 |
| 40° | 0.5 | 0.26 | 1 | 0.52 |

Single or DT mounting When Por<Fr, use Pr = Fr

1N=0.102kgf

| Boundary dimensions (mm) d | D | B | r (min) | r1 (min) | Load center (mm) a | Bearing No. Single | Duplex | | | Basic dynamic load rating Cr (N) Single | Duplex | Basic static load rating Cor (N) Single | Duplex | Limiting speed (min-1) Grease lubrication Single | Grease lubrication Duplex | Oil lubrication Single | Oil lubrication Duplex | Abutment and fillet dimensions (mm) da1 (min) | da2 (min) | Da1 (max) | Da2 (max) | ra (max) | ra1 (max) | Mass (kg) Single | Bearing No. |
|---|---|---|---|---|---|---|---|---|---|---|---|---|---|---|---|---|---|---|---|---|---|---|---|---|---|
| 100 | 150 | 24 | 1.5 | 1 | 24.1 | 7020 | 7020DB | 7020DF | 7020DT | 68500 | 111000 | 70500 | 141000 | 3600 | 2800 | 4800 | 3800 | 107 | 107 | 143 | 145.6 | 1.5 | 1 | 1.37 | 7020 |
| | 150 | 24 | 1.5 | 1 | 2.4 | 7020C | 7020CDB | 7020CDF | 7020CDT | 76000 | 123000 | 77500 | 156000 | 6400 | 5100 | 8800 | 7000 | 107 | 107 | 143 | 145.6 | 1.5 | 1 | 1.37 | 7020C |
| | 180 | 34 | 2.1 | 1.1 | 23.4 | 7220 | 7220DB | 7220DF | 7220DT | 144000 | 234000 | 126000 | 251000 | 3200 | 2400 | 4200 | 3400 | 112 | 107 | 168 | 173 | 2 | 1 | 3.32 | 7220 |
| | 180 | 34 | 2.1 | 1.1 | 41.8 | 7220B | 7220BDB | 7220BDF | 7220BDT | 135000 | 219000 | 118000 | 237000 | 2800 | 2200 | 3700 | 3000 | 112 | 107 | 168 | 173 | 2 | 1 | 3.32 | 7220B |
| | 180 | 34 | 2.1 | 1.1 | –0.8 | 7220C | 7220CDB | 7220CDF | 7220CDT | 150000 | 244000 | 128000 | 255000 | 5700 | 4600 | 7900 | 6300 | 112 | 112 | 168 | 173 | 2 | 1 | 3.32 | 7220C |
| | 215 | 47 | 3 | 1.1 | 22.0 | 7320 | 7320DB | 7320DF | 7320DT | 207000 | 335000 | 190000 | 380000 | 2800 | 2200 | 3800 | 3000 | 114 | 107 | 201 | 208 | 2.5 | 1 | 8.18 | 7320 |
| | 215 | 47 | 3 | 1.1 | 42.7 | 7320B | 7320BDB | 7320BDF | 7320BDT | 196000 | 320000 | 180000 | 360000 | 2400 | 2000 | 3300 | 2800 | 114 | 107 | 201 | 208 | 2.5 | 1 | 8.18 | 7320B |
| | 215 | 47 | 3 | 1.1 | –5.3 | 7320C | 7320CDB | 7320CDF | 7320CDT | 211000 | 340000 | 197000 | 385000 | 5100 | 4100 | 7000 | 5600 | 114 | 114 | 201 | 208 | 2.5 | 1 | 8.18 | 7320C |
| 105 | 160 | 26 | 2 | 1 | 25.2 | 7021 | 7021DB | 7021DF | 7021DT | 80000 | 130000 | 81500 | 163000 | 3300 | 2600 | 4400 | 3500 | 113 | 113 | 152 | 155 | 2 | 1 | 1.73 | 7021 |
| | 160 | 26 | 2 | 1 | 2.3 | 7021C | 7021CDB | 7021CDF | 7021CDT | 97000 | 158000 | 97500 | 195000 | 6000 | 4800 | 8300 | 6600 | 113 | 113 | 152 | 155 | 2 | 1 | 1.73 | 7021C |
| | 190 | 36 | 2.1 | 1.1 | 24.6 | 7221 | 7221DB | 7221DF | 7221DT | 157000 | 254000 | 141000 | 283000 | 3000 | 2400 | 4000 | 3200 | 117 | 112 | 178 | 183 | 2 | 1 | 3.93 | 7221 |
| | 190 | 36 | 2.1 | 1.1 | 44.0 | 7221B | 7221BDB | 7221BDF | 7221BDT | 147000 | 239000 | 135000 | 267000 | 2700 | 2100 | 3600 | 2900 | 117 | 112 | 178 | 183 | 2 | 1 | 3.93 | 7221B |
| | 190 | 36 | 2.1 | 1.1 | –0.9 | 7221C | 7221CDB | 7221CDF | 7221CDT | 163000 | 265000 | 144000 | 287000 | 5400 | 4300 | 7500 | 6000 | 117 | 117 | 178 | 183 | 2 | 1 | 3.93 | 7221C |
| | 225 | 49 | 3 | 1.1 | 23.1 | 7321 | 7321DB | 7321DF | 7321DT | 219000 | 355000 | 206000 | 410000 | 2700 | 2100 | 3600 | 2800 | 119 | 112 | 211 | 218 | 2.5 | 1 | 9.34 | 7321 |
| | 225 | 49 | 3 | 1.1 | 44.8 | 7321B | 7321BDB | 7321BDF | 7321BDT | 208000 | 335000 | 196000 | 390000 | 2400 | 1900 | 3200 | 2600 | 119 | 112 | 211 | 218 | 2.5 | 1 | 9.34 | 7321B |
| | 225 | 49 | 3 | 1.1 | –5.3 | 7321C | 7321CDB | 7321CDF | 7321CDT | 224000 | 365000 | 212000 | 425000 | 4800 | 3800 | 6700 | 5400 | 119 | 119 | 211 | 218 | 2.5 | 1 | 9.34 | 7321C |
| 110 | 170 | 28 | 2 | 1 | 26.2 | 7022 | 7022DB | 7022DF | 7022DT | 92000 | 149000 | 92500 | 185000 | 3200 | 2500 | 4300 | 3300 | 118 | 118 | 162 | 165 | 2 | 1 | 2.14 | 7022 |
| | 170 | 28 | 2 | 1 | 2.2 | 7022C | 7022CDB | 7022CDF | 7022CDT | 107000 | 173000 | 104000 | 209000 | 5700 | 4600 | 7900 | 6300 | 118 | 118 | 162 | 165 | 2 | 1 | 2.14 | 7022C |
| | 200 | 38 | 2.1 | 1.1 | 25.7 | 7222 | 7222DB | 7222DF | 7222DT | 170000 | 276000 | 158000 | 315000 | 2800 | 2200 | 3800 | 3000 | 122 | 117 | 188 | 193 | 2 | 1 | 4.62 | 7222 |
| | 200 | 38 | 2.1 | 1.1 | 46.1 | 7222B | 7222BDB | 7222BDF | 7222BDT | 159000 | 259000 | 149000 | 298000 | 2600 | 2000 | 3400 | 2800 | 122 | 117 | 188 | 193 | 2 | 1 | 4.62 | 7222B |
| | 200 | 38 | 2.1 | 1.1 | –1.0 | 7222C | 7222CDB | 7222CDF | 7222CDT | 171000 | 277000 | 157000 | 315000 | 5200 | 4200 | 7100 | 5700 | 122 | 122 | 188 | 193 | 2 | 1 | 4.62 | 7222C |
| | 240 | 50 | 3 | 1.1 | 25.5 | 7322 | 7322DB | 7322DF | 7322DT | 244000 | 395000 | 239000 | 480000 | 2600 | 2000 | 3400 | 2700 | 124 | 117 | 226 | 233 | 2.5 | 1 | 11.0 | 7322 |
| | 240 | 50 | 3 | 1.1 | 48.5 | 7322B | 7322BDB | 7322BDF | 7322BDT | 231000 | 375000 | 227000 | 455000 | 2200 | 1800 | 3000 | 2400 | 124 | 117 | 226 | 233 | 2.5 | 1 | 11.0 | 7322B |
| | 240 | 50 | 3 | 1.1 | –4.7 | 7322C | 7322CDB | 7322CDF | 7322CDT | 237000 | 385000 | 227000 | 455000 | 4600 | 3700 | 6300 | 5000 | 124 | 124 | 226 | 233 | 2.5 | 1 | 11.0 | 7322C |
| 120 | 180 | 28 | 2 | 1 | 29.3 | 7024 | 7024DB | 7024DF | 7024DT | 96500 | 157000 | 103000 | 206000 | 2900 | 2300 | 3800 | 3000 | 128 | 128 | 172 | 175 | 2 | 1 | 2.27 | 7024 |
| | 180 | 28 | 2 | 1 | 3.3 | 7024C | 7024CDB | 7024CDF | 7024CDT | 109000 | 178000 | 112000 | 223000 | 5300 | 4200 | 7300 | 5800 | 128 | 128 | 172 | 175 | 2 | 1 | 2.27 | 7024C |
| | 215 | 40 | 2.1 | 1.1 | 28.4 | 7224 | 7224DB | 7224DF | 7224DT | 182000 | 295000 | 180000 | 360000 | 2600 | 2100 | 3400 | 2700 | 132 | 127 | 203 | 208 | 2 | 1 | 6.05 | 7224 |
| | 215 | 40 | 2.1 | 1.1 | 50.3 | 7224B | 7224BDB | 7224BDF | 7224BDT | 170000 | 277000 | 169000 | 335000 | 2300 | 1900 | 3100 | 2500 | 132 | 127 | 203 | 208 | 2 | 1 | 6.05 | 7224B |
| | 215 | 40 | 2.1 | 1.1 | –0.6 | 7224C | 7224CDB | 7224CDF | 7224CDT | 185000 | 300000 | 176000 | 350000 | 4800 | 3800 | 6600 | 5300 | 132 | 132 | 203 | 208 | 2 | 1 | 6.05 | 7224C |
| | 260 | 55 | 3 | 1.1 | 27.3 | 7324 | 7324DB | 7324DF | 7324DT | 260000 | 420000 | 169000 | 540000 | 2200 | 1800 | 3000 | 2400 | 134 | 127 | 246 | 253 | 2.5 | 1 | 14.2 | 7324 |
| | 260 | 55 | 3 | 1.1 | 52.2 | 7324B | 7324BDB | 7324BDF | 7324BDT | 245000 | 400000 | 253000 | 505000 | 2100 | 1700 | 2800 | 2200 | 134 | 127 | 246 | 253 | 2.5 | 1 | 14.2 | 7324B |

Remarks: 1. "a" means the distance between back face and load center.
2. See page 122 regarding limiting speeds.

# Angular Contact Ball Bearings Single Mounting / Duplex Mounting

Bore Diameter: 130～160mm

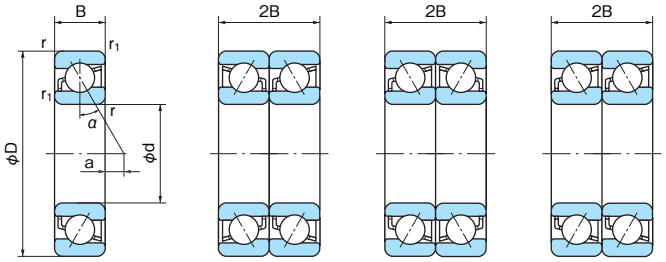


Single | DB (Back-to-back) | DF (Face-to-face) | DT (Tandem)

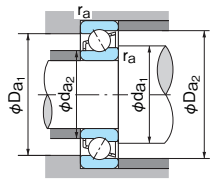


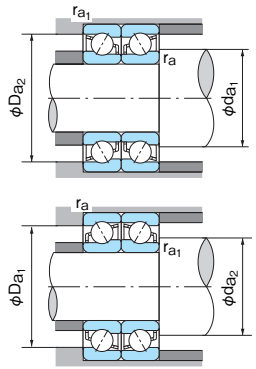


■Dynamic equivalent radial load

Pr＝XFr＋YFa

| Contact angle | iFa/Cor | e | Single or DT: Fa/Fr > e X | Single or DT: Fa/Fr > e Y | DB or DF: Fa/Fr ≦ e X | DB or DF: Fa/Fr ≦ e Y | DB or DF: Fa/Fr > e X | DB or DF: Fa/Fr > e Y |
|---|---|---|---|---|---|---|---|---|
| 15° | 0.015 | 0.38 | | 1.47 | | 1.65 | | 2.39 |
| | 0.029 | 0.40 | 0.44 | 1.40 | 1 | 1.57 | 0.72 | 2.28 |
| | 0.058 | 0.43 | | 1.30 | | 1.46 | | 2.11 |
| | 0.087 | 0.46 | | 1.23 | | 1.38 | | 2.00 |
| | 0.12 | 0.47 | 0.44 | 1.19 | 1 | 1.34 | 0.72 | 1.93 |
| | 0.17 | 0.50 | | 1.12 | | 1.26 | | 1.82 |
| | 0.29 | 0.55 | | 1.02 | | 1.14 | | 1.66 |
| | 0.44 | 0.56 | 0.44 | 1.00 | 1 | 1.12 | 0.72 | 1.63 |
| | 0.58 | 0.56 | | 1.00 | | 1.12 | | 1.63 |
| 30° | — | 0.8 | 0.39 | 0.76 | 1 | 0.78 | 0.63 | 1.24 |
| 40° | — | 1.14 | 0.35 | 0.57 | 1 | 0.55 | 0.57 | 0.93 |

■i = 2 for DB or DF mounting
i = 1 for Single or DT mounting

■Single or DT mounting When Fa/Fr≦e, use Pr = Fr

■Static equivalent radial load

Por＝XoFr＋YoFa

| Contact angle | Single or DT: $X_0$ | Single or DT: $Y_0$ | DB or DF: $X_0$ | DB or DF: $Y_0$ |
|---|---|---|---|---|
| 15° | 0.5 | 0.46 | 1 | 0.92 |
| 30° | 0.5 | 0.33 | 1 | 0.66 |
| 40° | 0.5 | 0.26 | 1 | 0.52 |

Single or DT mounting When Por＜Fr, use Pr = Fr

1N=0.102kgf

| Boundary dimensions (mm) d | D | B | r (min) | r1 (min) | Load center (mm) a | Bearing No. Single | Duplex | | | Basic dynamic load rating Cr (N) Single | Duplex | Basic static load rating Cor (N) Single | Duplex | Limiting speed (min-1) Grease lubrication Single | Grease lubrication Duplex | Oil lubrication Single | Oil lubrication Duplex | Abutment and fillet dimensions (mm) da1 (min) | da2 (min) | Da1 (max) | Da2 (max) | ra (max) | ra1 (max) | Mass (kg) Single | Bearing No. |
|---|---|---|---|---|---|---|---|---|---|---|---|---|---|---|---|---|---|---|---|---|---|---|---|---|---|
| 130 | 200 | 33 | 2 | 1 | 31.1 | 7026 | 7026DB | 7026DF | 7026DT | 117000 | 190000 | 125000 | 250000 | 2600 | 2200 | 3600 | 2700 | 138 | 138 | 192 | 195 | 2 | 1 | 3.43 | 7026 |
| | 200 | 33 | 2 | 1 | 2.5 | 7026C | 7026CDB | 7026CDF | 7026CDT | 130000 | 211000 | 138000 | 276000 | 4800 | 3800 | 6700 | 5400 | 138 | 138 | 192 | 195 | 2 | 1 | 3.43 | 7026C |
| | 230 | 40 | 3 | 1.1 | 32 | 7226 | 7226DB | 7226DF | 7226DT | 196000 | 320000 | 198000 | 395000 | 2400 | 1900 | 3100 | 2500 | 144 | 137 | 216 | 223 | 2.5 | 1 | 6.88 | 7226 |
| | 230 | 40 | 3 | 1.1 | 55.5 | 7226B | 7226BDB | 7226BDF | 7226BDT | 184000 | 298000 | 185000 | 370000 | 2100 | 1700 | 2800 | 2300 | 144 | 137 | 216 | 223 | 2.5 | 1 | 6.88 | 7226B |
| | 230 | 40 | 3 | 1.1 | 0.9 | 7226C | 7226CDB | 7226CDF | 7226CDT | 214000 | 350000 | 216000 | 430000 | 4400 | 3500 | 6100 | 4900 | 144 | 144 | 216 | 223 | 2.5 | 1 | 6.88 | 7226C |
| | 280 | 58 | 4 | 1.5 | 30.2 | 7326 | 7326DB | 7326DF | 7326DT | 300000 | 490000 | 330000 | 660000 | 2200 | 1700 | 2900 | 2200 | 148 | 139 | 262 | 271 | 3 | 1.5 | 17.4 | 7326 |
| | 280 | 58 | 4 | 1.5 | 57.0 | 7326B | 7326BDB | 7326BDF | 7326BDT | 284000 | 460000 | 310000 | 620000 | 1900 | 1500 | 2600 | 2000 | 148 | 139 | 262 | 271 | 3 | 1.5 | 17.4 | 7326B |
| 140 | 210 | 33 | 2 | 1 | 34 | 7028 | 7028DB | 7028DF | 7028DT | 120000 | 194000 | 133000 | 265000 | 2400 | 1900 | 3300 | 2600 | 148 | 148 | 202 | 205 | 2 | 1 | 3.63 | 7028 |
| | 210 | 33 | 2 | 1 | 3.7 | 7028C | 7028CDB | 7028CDF | 7028CDT | 133000 | 216000 | 146000 | 292000 | 4600 | 3700 | 6300 | 5000 | 148 | 148 | 202 | 205 | 2 | 1 | 3.63 | 7028C |
| | 250 | 42 | 3 | 1.1 | 35.3 | 7228 | 7228DB | 7228DF | 7228DT | 211000 | 345000 | 228000 | 525000 | 2200 | 1800 | 3000 | 2400 | 154 | 147 | 236 | 243 | 2.5 | 1 | 8.78 | 7228 |
| | 250 | 42 | 3 | 1.1 | 60.8 | 7228B | 7228BDB | 7228BDF | 7228BDT | 197000 | 320000 | 214000 | 425000 | 2000 | 1600 | 2600 | 2200 | 154 | 147 | 236 | 243 | 2.5 | 1 | 8.78 | 7228B |
| | 250 | 42 | 3 | 1.1 | 1.3 | 7228C | 7228CDB | 7228CDF | 7228CDT | 223000 | 360000 | 235000 | 470000 | 4100 | 3300 | 5600 | 4500 | 154 | 154 | 236 | 243 | 2.5 | 1 | 8.78 | 7228C |
| | 300 | 62 | 4 | 1.5 | 32.5 | 7328 | 7328DB | 7328DF | 7328DT | 300000 | 490000 | 335000 | 670000 | 2000 | 1600 | 2600 | 2000 | 158 | 149 | 282 | 291 | 3 | 1.5 | 21.5 | 7328 |
| | 300 | 62 | 4 | 1.5 | 61.3 | 7328B | 7328BDB | 7328BDF | 7328BDT | 284000 | 460000 | 315000 | 635000 | 1700 | 1400 | 2400 | 1900 | 158 | 149 | 282 | 291 | 3 | 1.5 | 21.5 | 7328B |
| 150 | 225 | 35 | 2.1 | 1.1 | 36.6 | 7030 | 7030DB | 7030DF | 7030DT | 137000 | 222000 | 154000 | 305000 | 2300 | 1800 | 3000 | 2400 | 159 | 159 | 216 | 219 | 2 | 1 | 4.42 | 7030 |
| | 225 | 35 | 2.1 | 1.1 | 4.1 | 7030C | 7030CDB | 7030CDF | 7030CDT | 152000 | 247000 | 169000 | 340000 | 4300 | 3400 | 5900 | 4700 | 159 | 159 | 216 | 219 | 2 | 1 | 4.42 | 7030C |
| | 270 | 45 | 3 | 1.1 | 38.1 | 7230 | 7230DB | 7230DF | 7230DT | 249000 | 405000 | 280000 | 560000 | 2000 | 1600 | 2800 | 2200 | 164 | 157 | 256 | 263 | 2.5 | 1 | 11.0 | 7230 |
| | 270 | 45 | 3 | 1.1 | 65.6 | 7230B | 7230BDB | 7230BDF | 7230BDT | 223000 | 360000 | 246000 | 490000 | 1800 | 1500 | 2600 | 2000 | 164 | 157 | 256 | 263 | 2.5 | 1 | 11.0 | 7230B |
| | 270 | 45 | 3 | 1.1 | 1.5 | 7230C | 7230CDB | 7230CDF | 7230CDT | 261000 | 425000 | 287000 | 575000 | 3800 | 3000 | 5200 | 4200 | 164 | 164 | 256 | 263 | 2.5 | 1 | 11.0 | 7230C |
| | 320 | 65 | 4 | 1.5 | 35.3 | 7330 | 7330DB | 7330DF | 7330DT | 330000 | 535000 | 380000 | 765000 | 1700 | 1400 | 2400 | 1800 | 168 | 159 | 302 | 311 | 3 | 1.5 | 25.1 | 7330 |
| | 320 | 65 | 4 | 1.5 | 66.1 | 7330B | 7330BDB | 7330BDF | 7330BDT | 310000 | 505000 | 360000 | 725000 | 1500 | 1300 | 2200 | 1600 | 168 | 159 | 302 | 311 | 3 | 1.5 | 25.1 | 7330B |
| 160 | 240 | 38 | 2.1 | 1.1 | 38.7 | 7032 | 7032DB | 7032DF | 7032DT | 155000 | 252000 | 176000 | 350000 | 2100 | 1700 | 2800 | 2300 | 169 | 169 | 231 | 234 | 2 | 1 | 5.44 | 7032 |
| | 240 | 38 | 2.1 | 1.1 | 4.1 | 7032C | 7032CDB | 7032CDF | 7032CDT | 172000 | 280000 | 194000 | 390000 | 4000 | 3200 | 5500 | 4400 | 169 | 169 | 231 | 234 | 2 | 1 | 5.44 | 7032C |
| | 290 | 48 | 3 | 1.1 | 41.0 | 7232 | 7232DB | 7232DF | 7232DT | 263000 | 425000 | 305000 | 615000 | 1900 | 1500 | 2600 | 2000 | 174 | 167 | 276 | 283 | 2.5 | 1 | 13.7 | 7232 |
| | 290 | 48 | 3 | 1.1 | 70.4 | 7232B | 7232BDB | 7232BDF | 7232BDT | 246000 | 400000 | 287000 | 575000 | 1700 | 1400 | 2200 | 1800 | 174 | 167 | 276 | 283 | 2.5 | 1 | 13.7 | 7232B |
| | 290 | 48 | 3 | 1.1 | 2.4 | 7232C | 7232CDB | 7232CDF | 7232CDT | 288000 | 470000 | 335000 | 670000 | 3600 | 2900 | 4900 | 3900 | 174 | 167 | 276 | 283 | 2.5 | 1 | 13.7 | 7232C |
| | 340 | 68 | 4 | 1.5 | 38.2 | 7332 | 7332DB | 7332DF | 7332DT | 345000 | 565000 | 420000 | 845000 | 1700 | 1400 | 2200 | 1800 | 178 | 169 | 322 | 331 | 3 | 1.5 | 30.2 | 7332 |
| | 340 | 68 | 4 | 1.5 | 70.9 | 7332B | 7332BDB | 7332BDF | 7332BDT | 325000 | 530000 | 395000 | 795000 | 1500 | 1200 | 2000 | 1600 | 178 | 169 | 322 | 331 | 3 | 1.5 | 30.2 | 7332B |

Remarks: 1. "a" means the distance between back face and load center.
2. See page 122 regarding limiting speeds.

# Angular Contact Ball Bearings Single Mounting / Duplex Mounting

Bore Diameter: 170～200mm

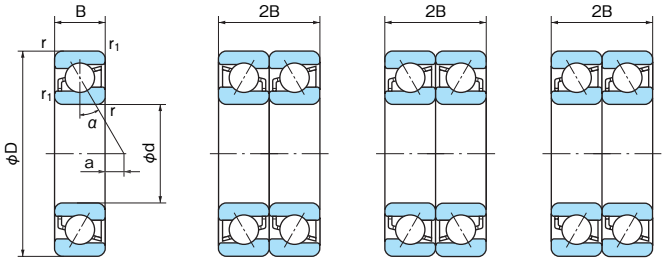


Single | DB (Back-to-back) | DF (Face-to-face) | DT (Tandem)

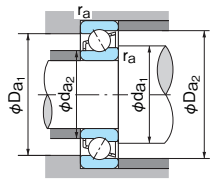


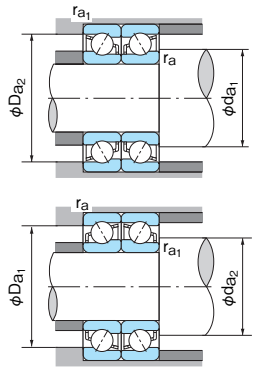


■Dynamic equivalent radial load

Pr＝XFr＋YFa

| Contact angle | iFa/Cor | e | Single or DT Fa/Fr > e X | Single or DT Fa/Fr > e Y | DB or DF Fa/Fr ≦ e X | DB or DF Fa/Fr ≦ e Y | DB or DF Fa/Fr > e X | DB or DF Fa/Fr > e Y |
|---|---|---|---|---|---|---|---|---|
| 15° | 0.015 | 0.38 | | 1.47 | | 1.65 | | 2.39 |
| | 0.029 | 0.40 | 0.44 | 1.40 | 1 | 1.57 | 0.72 | 2.28 |
| | 0.058 | 0.43 | | 1.30 | | 1.46 | | 2.11 |
| | 0.087 | 0.46 | | 1.23 | | 1.38 | | 2.00 |
| | 0.12 | 0.47 | 0.44 | 1.19 | 1 | 1.34 | 0.72 | 1.93 |
| | 0.17 | 0.50 | | 1.12 | | 1.26 | | 1.82 |
| | 0.29 | 0.55 | | 1.02 | | 1.14 | | 1.66 |
| | 0.44 | 0.56 | 0.44 | 1.00 | 1 | 1.12 | 0.72 | 1.63 |
| | 0.58 | 0.56 | | 1.00 | | 1.12 | | 1.63 |
| 30° | — | 0.8 | 0.39 | 0.76 | 1 | 0.78 | 0.63 | 1.24 |
| 40° | — | 1.14 | 0.35 | 0.57 | 1 | 0.55 | 0.57 | 0.93 |

■i = 2 for DB or DF mounting
i = 1 for Single or DT mounting

■Single or DT mounting When Fa/Fr≦e, use Pr = Fr

■Static equivalent radial load

Por＝XoFr＋YoFa

| Contact angle | Single or DT $X_0$ | Single or DT $Y_0$ | DB or DF $X_0$ | DB or DF $Y_0$ |
|---|---|---|---|---|
| 15° | 0.5 | 0.46 | 1 | 0.92 |
| 30° | 0.5 | 0.33 | 1 | 0.66 |
| 40° | 0.5 | 0.26 | 1 | 0.52 |

Single or DT mounting When Por＜Fr, use Pr = Fr

1N=0.102kgf

| Boundary dimensions (mm) d | D | B | r (min) | r1 (min) | Load center (mm) a | Bearing No. Single | Duplex | | | Basic dynamic load rating Cr (N) Single | Duplex | Basic static load rating Cor (N) Single | Duplex | Limiting speed (min-1) Grease lubrication Single | Grease lubrication Duplex | Oil lubrication Single | Oil lubrication Duplex | Abutment and fillet dimensions (mm) da1 (min) | da2 (min) | Da1 (max) | Da2 (max) | ra (max) | ra1 (max) | Mass (kg) Single | Bearing No. |
|---|---|---|---|---|---|---|---|---|---|---|---|---|---|---|---|---|---|---|---|---|---|---|---|---|---|
| 170 | 260 | 42 | 2.1 | 1.1 | 41.1 | 7034 | 7034DB | 7034DF | 7034DT | 179000 | 291000 | 210000 | 420000 | 2000 | 1600 | 2600 | 2100 | 179 | 179 | 251 | 254 | 2 | 1 | 7.87 | 7034 |
| | 260 | 42 | 2.1 | 1.1 | 3.8 | 7034C | 7034CDB | 7034CDF | 7034CDT | 206000 | 335000 | 236000 | 470000 | 3700 | 3000 | 5100 | 4100 | 179 | 179 | 251 | 254 | 2 | 1 | 7.87 | 7034C |
| | 310 | 52 | 4 | 1.5 | 43.3 | 7234 | 7234DB | 7234DF | 7234DT | 272000 | 440000 | 330000 | 660000 | 1800 | 1400 | 2400 | 1900 | 188 | 179 | 292 | 301 | 3 | 1.5 | 17.4 | 7234 |
| | 310 | 52 | 4 | 1.5 | 74.7 | 7234B | 7234BDB | 7234BDF | 7234BDT | 254000 | 410000 | 310000 | 620000 | 1600 | 1300 | 2200 | 1700 | 188 | 179 | 292 | 301 | 3 | 1.5 | 17.4 | 7234B |
| | 310 | 52 | 4 | 1.5 | 2.2 | 7234C | 7234CDB | 7234CDF | 7234CDT | 299000 | 485000 | 360000 | 725000 | 3300 | 2600 | 4600 | 3700 | 188 | 179 | 292 | 301 | 3 | 1.5 | 17.4 | 7234C |
| | 360 | 72 | 4 | 1.5 | 40.5 | 7334 | 7334DB | 7334DF | 7334DT | 390000 | 630000 | 485000 | 970000 | 1600 | 1300 | 2200 | 1700 | 188 | 179 | 342 | 351 | 3 | 1.5 | 35.7 | 7334 |
| | 360 | 72 | 4 | 1.5 | 75.2 | 7334B | 7334BDB | 7334BDF | 7334BDT | 365000 | 595000 | 460000 | 915000 | 1400 | 1100 | 2000 | 1600 | 188 | 179 | 342 | 351 | 3 | 1.5 | 35.7 | 7334B |
| 180 | 280 | 46 | 2.1 | 1.1 | 43.4 | 7036 | 7036DB | 7036DF | 7036DT | 207000 | 335000 | 252000 | 505000 | 1900 | 1500 | 2500 | 2000 | 189 | 189 | 271 | 274 | 2 | 1 | 9.98 | 7036 |
| | 280 | 46 | 2.1 | 1.1 | 3.5 | 7036C | 7036CDB | 7036CDF | 7036CDT | 235000 | 385000 | 290000 | 580000 | 3500 | 2800 | 4800 | 3800 | 189 | 189 | 271 | 274 | 2 | 1 | 9.98 | 7036C |
| | 320 | 52 | 4 | 1.5 | 46.2 | 7236 | 7236DB | 7236DF | 7236DT | 281000 | 455000 | 350000 | 705000 | 1700 | 1300 | 2200 | 1800 | 198 | 189 | 302 | 311 | 3 | 1.5 | 19.9 | 7236 |
| | 320 | 52 | 4 | 1.5 | 48.9 | 7236B | 7236BDB | 7236BDF | 7236BDT | 262000 | 425000 | 330000 | 660000 | 1500 | 1200 | 2000 | 1700 | 198 | 189 | 302 | 311 | 3 | 1.5 | 19.9 | 7236B |
| | 320 | 52 | 4 | 1.5 | 3.3 | 7236C | 7236CDB | 7236CDF | 7236CDT | 310000 | 500000 | 385000 | 775000 | 3200 | 2600 | 4400 | 3500 | 198 | 189 | 302 | 311 | 3 | 1.5 | 19.9 | 7236C |
| | 380 | 75 | 4 | 1.5 | 43.3 | 7336 | 7336DB | 7336DF | 7336DT | 410000 | 665000 | 535000 | 1070000 | 1400 | 1200 | 2000 | 1600 | 198 | 189 | 362 | 371 | 3 | 1.5 | 41.3 | 7336 |
| | 380 | 75 | 4 | 1.5 | 80.0 | 7336B | 7336BDB | 7336BDF | 7336BDT | 385000 | 625000 | 505000 | 1010000 | 1300 | 1100 | 1900 | 1500 | 198 | 189 | 362 | 371 | 3 | 1.5 | 41.3 | 7336B |
| 190 | 290 | 46 | 2.1 | 1.1 | 46.3 | 7038 | 7038DB | 7038DF | 7038DT | 218000 | 355000 | 277000 | 555000 | 1800 | 1400 | 2300 | 1900 | 199 | 199 | 281 | 284 | 2 | 1 | 10.7 | 7038 |
| | 290 | 46 | 2.1 | 1.1 | 4.7 | 7038C | 7038CDB | 7038CDF | 7038CDT | 248000 | 405000 | 310000 | 615000 | 3300 | 2600 | 4600 | 3700 | 199 | 199 | 281 | 284 | 2 | 1 | 10.7 | 7038C |
| | 340 | 55 | 4 | 1.5 | 49.0 | 7238 | 7238DB | 7238DF | 7238DT | 315000 | 510000 | 410000 | 825000 | 1600 | 1300 | 2200 | 1700 | 208 | 199 | 322 | 331 | 3 | 1.5 | 21.5 | 7238 |
| | 340 | 55 | 4 | 1.5 | 83.7 | 7238B | 7238BDB | 7238BDF | 7238BDT | 294000 | 475000 | 385000 | 770000 | 1400 | 1100 | 2000 | 1600 | 208 | 199 | 322 | 331 | 3 | 1.5 | 21.5 | 7238B |
| | 400 | 78 | 5 | 2 | 46.1 | 7338 | 7338DB | 7338DF | 7338DT | 445000 | 725000 | 610000 | 1220000 | 1400 | 1100 | 1900 | 1500 | 212 | 200 | 378 | 390 | 4 | 2 | 47.6 | 7338 |
| | 400 | 78 | 5 | 2 | 84.8 | 7338B | 7338BDB | 7338BDF | 7338BDT | 420000 | 680000 | 575000 | 1150000 | 1300 | 1000 | 1800 | 1400 | 212 | 200 | 378 | 390 | 4 | 2 | 47.6 | 7338B |
| 200 | 310 | 51 | 2.1 | 1.1 | 48.1 | 7040 | 7040DB | 7040DF | 7040DT | 226000 | 365000 | 277000 | 565000 | 1700 | 1300 | 2200 | 1800 | 209 | 209 | 301 | 304 | 2 | 1 | 13.8 | 7040 |
| | 310 | 51 | 2.1 | 1.1 | 3.9 | 7040C | 7040CDB | 7040CDF | 7040CDT | 274000 | 445000 | 360000 | 715000 | 3100 | 2500 | 4300 | 3400 | 209 | 209 | 301 | 304 | 2 | 1 | 13.8 | 7040C |
| | 360 | 58 | 4 | 1.5 | 51.8 | 7240 | 7240DB | 7240DF | 7240DT | 335000 | 550000 | 450000 | 900000 | 1500 | 1200 | 2000 | 1600 | 218 | 209 | 342 | 351 | 3 | 1.5 | 25.5 | 7240 |
| | 360 | 58 | 4 | 1.5 | 88.5 | 7240B | 7240BDB | 7240BDF | 7240BDT | 315000 | 510000 | 420000 | 840000 | 1300 | 1000 | 1900 | 1500 | 218 | 209 | 342 | 351 | 3 | 1.5 | 25.5 | 7240B |
| | 420 | 80 | 5 | 2 | 49.5 | 7340 | 7340DB | 7340DF | 7340DT | 475000 | 770000 | 655000 | 1310000 | 1300 | 1100 | 1800 | 1400 | 222 | 210 | 398 | 410 | 4 | 2 | 53.7 | 7340 |
| | 420 | 80 | 5 | 2 | 90.1 | 7340B | 7340BDB | 7340BDF | 7340BDT | 445000 | 725000 | 620000 | 1240000 | 1200 | 1000 | 1700 | 1300 | 222 | 210 | 398 | 410 | 4 | 2 | 53.7 | 7340B |

Remarks: 1. "a" means the distance between back face and load center.
2. See page 122 regarding limiting speeds.

# Double-row Angular Contact Ball Bearings

Bore Diameter: 10～45mm

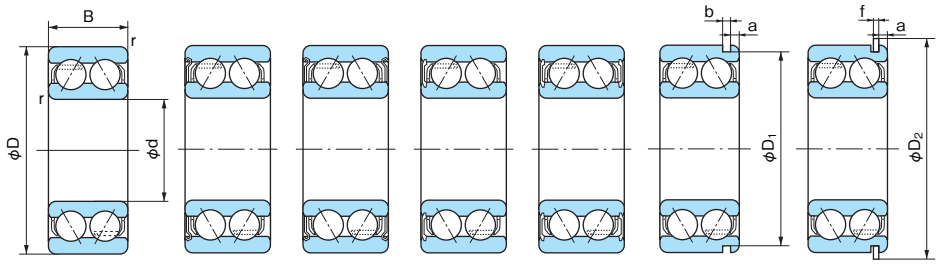


Open type | One shield (Z) | Two shields (ZZ) | One seal (NS) | Two seals (2NS) | With snap ring groove (N) | With snap ring (NR)

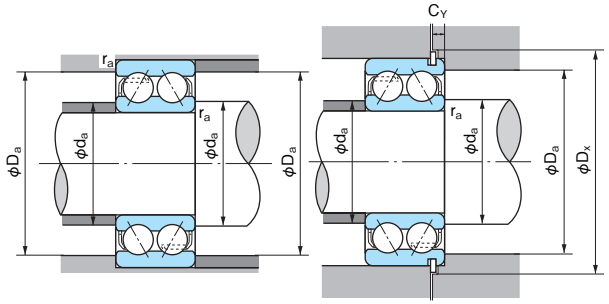


**Dynamic equivalent radial load**

Pr=XFr+YFa

| Contact angle | e | Fa/Fr ≦ e | | Fa/Fr > e | |
|---|---|---|---|---|---|
| | | X | Y | X | Y |
| 30° | 0.80 | 1.0 | 0.78 | 0.63 | 1.24 |
| 20° | 0.57 | 1.0 | 1.09 | 0.70 | 1.63 |

**Static equivalent radial load**

Nominal contact angle 30° : Por=Fr+0.66Fa

Nominal contact angle 20° : Por=Fr+0.84Fa

1N=0.102kgf

| Boundary dimensions (mm) | | | | Bearing No. | | | | | | | Basic dynamic load rating Cr (N) | Basic static load rating Cor (N) | Limiting speed (min-1) | | Dimensions of snap ring groove and snap ring (mm) | | | | | Abutment and fillet dimensions (mm) | | | | | Mass (kg) | Bearing No. |
|---|---|---|---|---|---|---|---|---|---|---|---|---|---|---|---|---|---|---|---|---|---|---|---|---|---|---|
| d | D | B | r (min) | Open type | Shield type | | Seal type | | With snap ring groove | With snap ring | | | Grease lubrication | Oil lubrication | D1 (max) | a (max) | b (min) | D2 (max) | f (max) | da (min) | Da (max) | Dx (min) | ra (max) | CY (max) | | |
| 10 | 30 | 14.3 | 0.6 | 5200 | 5200Z | 5200ZZ | 5200NS | 5200-2NS | 5200N | 5200NR | 7300 | 4000 | 18000 | 24000 | 28.17 | 2.06 | 1.35 | 34.7 | 1.12 | 15 | 25 | 35.5 | 0.6 | 2.9 | 0.050 | 5200 |
| | 30 | 14.3 | 0.6 | 5200A | 5200AZ | 5200AZZ | 5200ANS | 5200A-2NS | 5200AN | 5200ANR | 6950 | 3800 | 16000 | 22000 | 28.17 | 2.06 | 1.35 | 34.7 | 1.12 | 15 | 25 | 35.5 | 0.6 | 2.9 | 0.050 | 5200A |
| 12 | 32 | 15.9 | 0.6 | 5201 | 5201Z | 5201ZZ | 5201NS | 5201-2NS | 5201N | 5201NR | 10700 | 5950 | 16000 | 22000 | 30.15 | 2.06 | 1.35 | 36.7 | 1.12 | 17 | 27 | 37.5 | 0.6 | 2.9 | 0.060 | 5201 |
| | 32 | 15.9 | 0.6 | 5201A | 5201AZ | 5201AZZ | 5201ANS | 5201A-2NS | 5201AN | 5201ANR | 10300 | 5650 | 15000 | 20000 | 30.15 | 2.06 | 1.35 | 36.7 | 1.12 | 17 | 27 | 37.5 | 0.6 | 2.9 | 0.060 | 5201A |
| 15 | 35 | 15.9 | 0.6 | 5202 | 5202Z | 5202ZZ | 5202NS | 5202-2NS | 5202N | 5202NR | 11900 | 7200 | 14000 | 19000 | 33.17 | 2.06 | 1.35 | 39.7 | 1.12 | 20 | 30 | 40.5 | 0.6 | 2.9 | 0.070 | 5202 |
| | 35 | 15.9 | 0.6 | 5202A | 5202AZ | 5202AZZ | 5202ANS | 5202A-2NS | 5202AN | 5202ANR | 11400 | 6850 | 12000 | 17000 | 33.17 | 2.06 | 1.35 | 39.7 | 1.12 | 20 | 30 | 40.5 | 0.6 | 2.9 | 0.070 | 5202A |
| 17 | 40 | 17.5 | 0.6 | 5203 | 5203Z | 5203ZZ | 5203NS | 5203-2NS | 5203N | 5203NR | 15000 | 9250 | 12000 | 17000 | 38.1 | 2.06 | 1.35 | 44.6 | 1.12 | 22 | 35 | 45.5 | 0.6 | 2.9 | 0.090 | 5203 |
| | 40 | 17.5 | 0.6 | 5203A | 5203AZ | 5203AZZ | 5203ANS | 5203A-2NS | 5203AN | 5203ANR | 14200 | 8800 | 11000 | 15000 | 38.1 | 2.06 | 1.35 | 44.6 | 1.12 | 22 | 35 | 45.5 | 0.6 | 2.9 | 0.090 | 5203A |
| | 47 | 22.2 | 1 | 5303 | — | — | — | — | 5303N | 5303NR | 21300 | 12700 | 10000 | 14000 | 44.6 | 2.46 | 1.35 | 52.7 | 1.12 | 23 | 41 | 53.5 | 1 | 3.3 | 0.140 | 5303 |
| 20 | 47 | 20.6 | 1 | 5204 | 5204Z | 5204ZZ | 5204NS | 5204-2NS | 5204N | 5204NR | 20000 | 12700 | 10000 | 14000 | 44.6 | 2.46 | 1.35 | 52.7 | 1.12 | 26 | 41 | 53.5 | 1 | 3.3 | 0.120 | 5204 |
| | 47 | 20.6 | 1 | 5204A | 5204AZ | 5204AZZ | 5204ANS | 5204A-2NS | 5204AN | 5204ANR | 19000 | 12100 | 9500 | 13000 | 44.6 | 2.46 | 1.35 | 52.7 | 1.12 | 26 | 41 | 53.5 | 1 | 3.3 | 0.120 | 5204A |
| | 52 | 22.2 | 1.1 | 5304 | — | — | — | — | 5304N | 5304NR | 21700 | 13300 | 9000 | 11000 | 49.73 | 2.46 | 1.35 | 57.9 | 1.12 | 27 | 45 | 58.5 | 1 | 3.3 | 0.230 | 5304 |
| 25 | 52 | 20.6 | 1 | 5205 | 5205Z | 5205ZZ | 5205NS | 5205-2NS | 5205N | 5205NR | 21800 | 15100 | 9500 | 13000 | 49.73 | 2.46 | 1.35 | 57.9 | 1.12 | 31 | 46 | 58.5 | 1 | 3.3 | 0.190 | 5205 |
| | 52 | 20.6 | 1 | 5205A | 5205AZ | 5205AZZ | 5205ANS | 5205A-2NS | 5205AN | 5205ANR | 20600 | 14300 | 8000 | 11000 | 49.73 | 2.46 | 1.35 | 57.9 | 1.12 | 31 | 46 | 58.8 | 1 | 3.3 | 0.190 | 5205A |
| | 62 | 25.4 | 1.1 | 5305 | — | — | — | — | 5305N | 5305NR | 32000 | 21600 | 7300 | 10000 | 59.61 | 3.28 | 1.9 | 67.7 | 1.7 | 32 | 55 | 68.5 | 1 | 4.7 | 0.340 | 5305 |
| 30 | 62 | 23.8 | 1 | 5206 | — | — | — | — | 5206N | 5206NR | 30500 | 21700 | 8000 | 11000 | 59.61 | 3.28 | 1.9 | 67.7 | 1.7 | 36 | 56 | 68.5 | 1 | 4.7 | 0.290 | 5206 |
| | 62 | 23.8 | 1 | — | 5206Z | 5206ZZ | 5206NS | 5206-2NS | — | — | 25900 | 18700 | 8000 | — | — | — | — | — | — | 36 | 56 | — | 1 | — | 0.290 | 5206Z |
| | 62 | 23.8 | 1 | 5206A | — | — | — | — | 5206AN | 5206ANR | 28600 | 20500 | 7000 | 9500 | 59.61 | 3.28 | 1.9 | 67.7 | 1.7 | 36 | 56 | 68.5 | 1 | 4.7 | 0.290 | 5206A |
| | 62 | 23.8 | 1 | — | 5206AZ | 5206AZZ | 5206ANS | 5206A-2NS | — | — | 24400 | 17700 | 7000 | — | — | — | — | — | — | 36 | 56 | — | 1 | — | 0.290 | 5206AZ |
| | 72 | 30.2 | 1.1 | 5306 | — | — | — | — | 5306N | 5306NR | 41500 | 29000 | 7000 | 9500 | 68.81 | 3.28 | 1.9 | 78.6 | 1.7 | 37 | 65 | 80 | 1 | 4.7 | 0.510 | 5306 |
| 35 | 72 | 27 | 1.1 | 5207 | — | — | — | — | 5207N | 5207NR | 40000 | 29500 | 7000 | 9500 | 68.81 | 3.28 | 1.9 | 78.6 | 1.7 | 42 | 65 | 80 | 1 | 4.7 | 0.430 | 5207 |
| | 72 | 27 | 1.1 | — | 5207Z | 5207ZZ | 5207NS | 5207-2NS | — | — | 35000 | 25900 | 7000 | — | — | — | — | — | — | 42 | 65 | — | 1 | — | 0.430 | 5207Z |
| | 72 | 27 | 1.1 | 5207A | — | — | — | — | 5207AN | 5207ANR | 38000 | 27700 | 6000 | 8000 | 68.81 | 3.28 | 1.9 | 78.6 | 1.7 | 42 | 65 | 80 | 1 | 4.7 | 0.430 | 5207A |
| | 72 | 27 | 1.1 | — | 5207AZ | 5207AZZ | 5207ANS | 5207A-2NS | — | — | 33000 | 24500 | 6000 | — | — | — | — | — | — | 42 | 65 | — | 1 | — | 0.430 | 5207AZ |
| | 80 | 34.9 | 1.5 | 5307 | — | — | — | — | 5307N | 5307NR | 52000 | 37000 | 6300 | 8500 | 76.81 | 3.28 | 1.9 | 86.6 | 1.7 | 44 | 71 | 88 | 1.5 | 4.7 | 0.790 | 5307 |
| 40 | 80 | 30.2 | 1.1 | 5208 | — | — | — | — | 5208N | 5208NR | 45500 | 34000 | 6000 | 8000 | 76.81 | 3.28 | 1.9 | 86.6 | 1.7 | 47 | 73 | 88 | 1 | 4.7 | 0.570 | 5208 |
| | 80 | 30.2 | 1.1 | — | 5208Z | 5208ZZ | 5208NS | 5208-2NS | — | — | 40000 | 30500 | 6000 | — | — | — | — | — | — | 47 | 73 | — | 1 | — | 0.570 | 5208Z |
| | 80 | 30.2 | 1.1 | 5208A | — | — | — | — | 5208AN | 5208ANR | 42500 | 32500 | 5300 | 7200 | 76.81 | 3.28 | 1.9 | 86.6 | 1.7 | 47 | 73 | 88 | 1 | 4.7 | 0.570 | 5208A |
| | 80 | 30.2 | 1.1 | — | 5208AZ | 5208AZZ | 5208ANS | 5208A-2NS | — | — | 37500 | 28700 | 5300 | — | — | — | — | — | — | 47 | 73 | — | 1 | — | 0.570 | 5208AZ |
| | 90 | 36.5 | 1.5 | 5308 | — | — | — | — | 5308N | 5308NR | 63500 | 46500 | 5500 | 7500 | 86.79 | 3.28 | 2.7 | 96.5 | 2.46 | 49 | 81 | 98 | 1.5 | 5.4 | 1.05 | 5308 |
| 45 | 85 | 30.2 | 1.1 | 5209 | — | — | — | — | 5209N | 5209NR | 51000 | 39000 | 5500 | 7500 | 81.81 | 3.28 | 1.9 | 91.6 | 1.7 | 52 | 78 | 93 | 1 | 4.7 | 0.620 | 5209 |
| | 85 | 30.2 | 1.1 | — | 5209Z | 5209ZZ | 5209NS | 5209-2NS | — | — | 42500 | 34500 | 5500 | — | — | — | — | — | — | 52 | 78 | — | 1 | — | 0.620 | 5209Z |
| | 85 | 30.2 | 1.1 | 5209A | — | — | — | — | 5209AN | 5209ANR | 48000 | 37000 | 5000 | 6700 | 81.81 | 3.28 | 1.9 | 91.6 | 1.7 | 52 | 78 | 93 | 1 | 4.7 | 0.620 | 5209A |
| | 85 | 30.2 | 1.1 | — | 5209AZ | 5209AZZ | 5209ANS | 5209A-2NS | — | — | 40000 | 32500 | 5000 | — | — | — | — | — | — | 52 | 78 | — | 1 | — | 0.620 | 5209AZ |
| | 100 | 39.7 | 1.5 | 5309 | — | — | — | — | 5309N | 5309NR | 76500 | 56500 | 5000 | 6700 | 96.8 | 3.28 | 2.7 | 106.5 | 2.46 | 54 | 91 | 108 | 1.5 | 5.4 | 1.42 | 5309 |

Remark: Dimensions and tolerances of snap ring groove and snap ring are shown on pages 45 to 48.

# Double-row Angular Contact Ball Bearings

Bore Diameter: 50～85mm

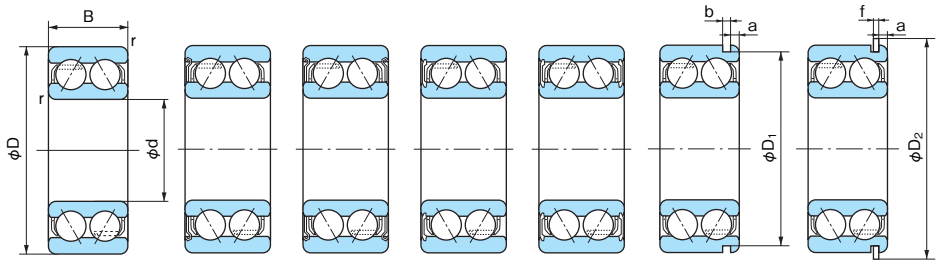


Open type | One shield (Z) | Two shields (ZZ) | One seal (NS) | Two seals (2NS) | With snap ring groove (N) | With snap ring (NR)

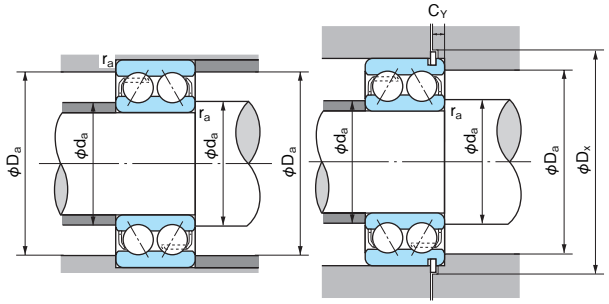


**Dynamic equivalent radial load**

Pr=XFr+YFa

| Contact angle | e | Fa/Fr ≦ e | | Fa/Fr > e | |
|---|---|---|---|---|---|
| | | X | Y | X | Y |
| 30° | 0.80 | 1.0 | 0.78 | 0.63 | 1.24 |
| 20° | 0.57 | 1.0 | 1.09 | 0.70 | 1.63 |

**Static equivalent radial load**

Nominal contact angle 30° : Por=Fr+0.66Fa

Nominal contact angle 20° : Por=Fr+0.84Fa

1N=0.102kgf

| Boundary dimensions (mm) | | | | Bearing No. | | | | | | | Basic dynamic load rating Cr (N) | Basic static load rating Cor (N) | Limiting speed (min-1) | | Dimensions of snap ring groove and snap ring (mm) | | | | | Abutment and fillet dimensions (mm) | | | | | Mass (kg) | Bearing No. |
|---|---|---|---|---|---|---|---|---|---|---|---|---|---|---|---|---|---|---|---|---|---|---|---|---|---|---|
| d | D | B | r (min) | Open type | Shield type | | Seal type | | With snap ring groove | With snap ring | | | Grease lubrication | Oil lubrication | $D_1$ (max) | a (max) | b (min) | $D_2$ (max) | f (max) | da (min) | Da (max) | Dx (min) | ra (max) | $C_Y$ (max) | | |
| 50 | 90 | 30.2 | 1.1 | 5210 | — | — | — | — | 5210N | 5210NR | 54500 | 44500 | 5000 | 6700 | 86.79 | 3.28 | 2.7 | 96.5 | 2.46 | 57 | 83 | 98 | 1 | 5.4 | 0.670 | 5210 |
| | 90 | 30.2 | 1.1 | — | 5210Z | 5210ZZ | 5210NS | 5210-2NS | — | — | 45000 | 39000 | 5000 | — | — | — | — | — | — | 57 | 83 | — | 1 | — | 0.670 | 5210Z |
| | 90 | 30.2 | 1.1 | 5210A | — | — | — | — | 5210AN | 5210ANR | 51000 | 42000 | 4500 | 6000 | 86.79 | 3.28 | 2.7 | 96.5 | 2.46 | 57 | 83 | 98 | 1 | 5.4 | 0.670 | 5210A |
| | 90 | 30.2 | 1.1 | — | 5210AZ | 5210AZZ | 5210ANS | 5210A-2NS | — | — | 42000 | 36500 | 4500 | — | — | — | — | — | — | 57 | 83 | — | 1 | — | 0.670 | 5210AZ |
| | 110 | 44.4 | 2 | 5310 | — | — | — | — | 5310N | 5310NR | 90000 | 68000 | 4500 | 6000 | 106.81 | 3.28 | 2.7 | 116.6 | 2.46 | 60 | 100 | 118 | 2 | 5.4 | 1.93 | 5310 |
| 55 | 100 | 33.3 | 1.5 | 5211 | — | — | — | — | 5211N | 5211NR | 67500 | 56500 | 4500 | 6300 | 96.8 | 3.28 | 2.7 | 106.5 | 2.46 | 64 | 91 | 108 | 1.5 | 5.4 | 0.960 | 5211 |
| | 100 | 33.3 | 1.5 | — | 5211Z | 5211ZZ | — | — | — | — | 57500 | 50500 | 4500 | — | — | — | — | — | — | 64 | 91 | — | 1.5 | — | 0.960 | 5211Z |
| | 100 | 33.3 | 1.5 | 5211A | — | — | — | — | 5211AN | 5211ANR | 63500 | 53000 | 4000 | 5500 | 96.8 | 3.28 | 2.7 | 106.5 | 2.46 | 64 | 91 | 108 | 1.5 | 5.4 | 0.960 | 5211A |
| | 100 | 33.3 | 1.5 | — | 5211AZ | 5211AZZ | — | — | — | — | 54000 | 47500 | 4000 | — | — | — | — | — | — | 64 | 91 | — | 1.5 | — | 0.960 | 5211AZ |
| | 120 | 49.2 | 2 | 5311 | — | — | — | — | 5311N | 5311NR | 112000 | 86500 | 4000 | 5500 | 115.21 | 4.06 | 3.1 | 129.7 | 2.82 | 65 | 110 | 131.5 | 2 | 6.5 | 2.30 | 5311 |
| 60 | 110 | 36.5 | 1.5 | 5212 | — | — | — | — | 5212N | 5212NR | 76000 | 62000 | 4300 | 5600 | 106.81 | 3.28 | 2.7 | 116.6 | 2.46 | 69 | 101 | 118 | 1.5 | 5.4 | 1.36 | 5212 |
| | 110 | 36.5 | 1.5 | — | 5212Z | 5212ZZ | — | — | — | — | 67000 | 57500 | 4300 | — | — | — | — | — | — | 69 | 101 | — | 1.5 | — | 1.36 | 5212Z |
| | 110 | 36.5 | 1.5 | 5212A | — | — | — | — | 5212AN | 5212ANR | 71500 | 58500 | 3800 | 5000 | 106.81 | 3.28 | 2.7 | 116.6 | 2.46 | 69 | 101 | 118 | 1.5 | 5.4 | 1.36 | 5212A |
| | 110 | 36.5 | 1.5 | — | 5212AZ | 5212AZZ | — | — | — | — | 63000 | 54000 | 3800 | — | — | — | — | — | — | 69 | 101 | — | 1.5 | — | 1.36 | 5212AZ |
| | 130 | 54 | 2.1 | 5312 | — | — | — | — | 5312N | 5312NR | 128000 | 101000 | 3800 | 5000 | 125.22 | 4.06 | 3.1 | 139.7 | 2.82 | 72 | 118 | 141.5 | 2 | 6.5 | 3.16 | 5312 |
| 65 | 120 | 38.1 | 1.5 | 5213 | — | — | — | — | 5213N | 5213NR | 89000 | 77000 | 3900 | 5300 | 115.21 | 4.06 | 3.1 | 129.7 | 2.82 | 74 | 111 | 131.5 | 1.5 | 6.5 | 1.66 | 5213 |
| | 120 | 38.1 | 1.5 | — | 5213Z | 5213ZZ | — | — | — | — | 78500 | 71000 | 3900 | — | — | — | — | — | — | 74 | 111 | — | 1.5 | — | 1.66 | 5213Z |
| | 120 | 38.1 | 1.5 | 5213A | — | — | — | — | 5213AN | 5213ANR | 83500 | 72500 | 3400 | 4600 | 115.21 | 4.06 | 3.1 | 129.7 | 2.82 | 74 | 111 | 131.5 | 1.5 | 6.5 | 1.66 | 5213A |
| | 120 | 38.1 | 1.5 | — | 5213AZ | 5213AZZ | — | — | — | — | 73500 | 66500 | 3400 | — | — | — | — | — | — | 74 | 111 | — | 1.5 | — | 1.66 | 5213AZ |
| | 140 | 58.7 | 2.1 | 5313 | — | — | — | — | 5313N | 5313NR | 145000 | 115000 | 3600 | 4700 | 135.23 | 4.9 | 3.1 | 149.7 | 2.82 | 77 | 128 | 152 | 2 | 7.4 | 3.86 | 5313 |
| 70 | 125 | 39.7 | 1.5 | 5214 | — | — | — | — | 5214N | 5214NR | 96500 | 84500 | 3800 | 5000 | 120.22 | 4.06 | 3.1 | 134.7 | 2.82 | 79 | 116 | 136.5 | 1.5 | 6.5 | 1.82 | 5214 |
| | 125 | 39.7 | 1.5 | — | 5214Z | 5214ZZ | — | — | — | — | 86000 | 79000 | 3800 | — | — | — | — | — | — | 79 | 116 | — | 1.5 | — | 1.82 | 5214Z |
| | 125 | 39.7 | 1.5 | 5214A | — | — | — | — | 5214AN | 5214ANR | 90500 | 79500 | 3200 | 4500 | 120.22 | 4.06 | 3.1 | 134.7 | 2.82 | 79 | 116 | 136.5 | 1.5 | 6.5 | 1.82 | 5214A |
| | 125 | 39.7 | 1.5 | — | 5214AZ | 5214AZZ | — | — | — | — | 80500 | 74000 | 3200 | — | — | — | — | — | — | 79 | 116 | — | 1.5 | — | 1.82 | 5214AZ |
| | 150 | 63.5 | 2.1 | 5314 | — | — | — | — | 5314N | 5314NR | 163000 | 132000 | 3200 | 4300 | 145.24 | 4.9 | 3.1 | 159.7 | 2.82 | 82 | 138 | 162 | 2 | 7.4 | 4.88 | 5314 |
| 75 | 130 | 41.3 | 1.5 | 5215 | — | — | — | — | 5215N | 5215NR | 96000 | 85500 | 3400 | 4700 | 125.22 | 4.06 | 3.1 | 139.7 | 2.82 | 84 | 121 | 141.5 | 1.5 | 6.5 | 1.91 | 5215 |
| | 130 | 41.3 | 1.5 | — | 5215Z | 5215ZZ | — | — | — | — | 94000 | 87000 | 3400 | — | — | — | — | — | — | 84 | 121 | — | 1.5 | — | 1.91 | 5215Z |
| | 130 | 41.3 | 1.5 | 5215A | — | — | — | — | 5215AN | 5215ANR | 90000 | 80500 | 3200 | 4300 | 125.22 | 4.06 | 3.1 | 139.7 | 2.82 | 84 | 121 | 141.5 | 1.5 | 6.5 | 1.91 | 5215A |
| | 130 | 41.3 | 1.5 | — | 5215AZ | 5215AZZ | — | — | — | — | 88000 | 81500 | 3200 | — | — | — | — | — | — | 84 | 121 | — | 1.5 | — | 1.91 | 5215AZ |
| | 160 | 68.3 | 2.1 | 5315 | — | — | — | — | 5315N | 5315NR | 178000 | 149000 | 3000 | 4000 | 155.22 | 4.9 | 3.1 | 169.7 | 2.82 | 87 | 148 | 172 | 2 | 7.4 | 5.51 | 5315 |
| 80 | 140 | 44.4 | 2 | 5216 | — | — | — | — | 5216N | 5216NR | 104000 | 94000 | 3500 | 4600 | 135.23 | 4.9 | 3.1 | 149.7 | 2.82 | 90 | 130 | 152 | 2 | 7.4 | 2.48 | 5216 |
| | 140 | 44.4 | 2 | 5216A | — | — | — | — | 5216AN | 5216ANR | 97500 | 88500 | 2800 | 4000 | 135.23 | 4.9 | 3.1 | 149.7 | 2.82 | 90 | 130 | 152 | 2 | 7.4 | 2.48 | 5216A |
| | 170 | 68.3 | 2.1 | 5316 | — | — | — | — | 5316N | 5316NR | 192000 | 167000 | 2800 | 4000 | 163.65 | 5.69 | 3.5 | 182.9 | 3.1 | 92 | 158 | 185 | 2 | 8.4 | 6.81 | 5316 |
| 85 | 150 | 49.2 | 2 | 5217 | — | — | — | — | 5217N | 5217NR | 112000 | 103000 | 3000 | 4000 | 145.24 | 4.9 | 3.1 | 159.7 | 2.82 | 95 | 140 | 162 | 2 | 7.4 | 3.40 | 5217 |
| | 150 | 49.2 | 2 | 5217A | — | — | — | — | 5217AN | 5217ANR | 105000 | 96500 | 2600 | 3800 | 145.24 | 4.9 | 3.1 | 159.7 | 2.82 | 95 | 140 | 162 | 2 | 7.4 | 3.40 | 5217A |

Remark: Dimensions and tolerances of snap ring groove and snap ring are shown on pages 45 to 48.

# Double-row Angular Contact Ball Bearings

Bore Diameter: 90～100mm

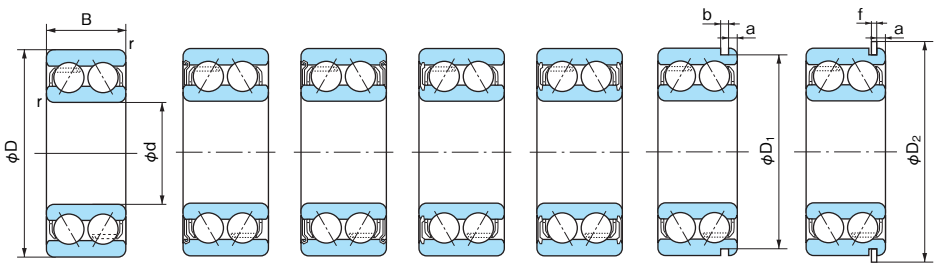


Open type | One shield (Z) | Two shields (ZZ) | One seal (NS) | Two seals (2NS) | With snap ring groove (N) | With snap ring (NR)

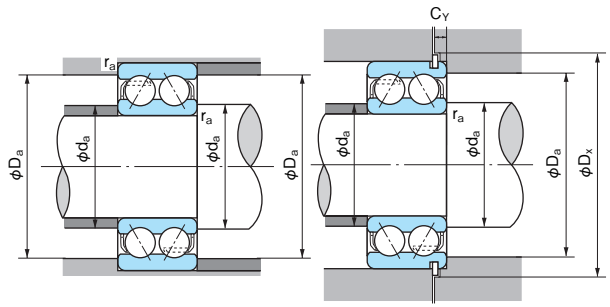


**Dynamic equivalent radial load**

Pr=XFr+YFa

| Contact angle | e | $\frac{Fa}{Fr} \leqq e$ | | $\frac{Fa}{Fr} > e$ | |
|---|---|---|---|---|---|
| | | X | Y | X | Y |
| 30° | 0.80 | 1.0 | 0.78 | 0.63 | 1.24 |
| 20° | 0.57 | 1.0 | 1.09 | 0.70 | 1.63 |

**Static equivalent radial load**

Nominal contact angle 30° : Por=Fr+0.66Fa

Nominal contact angle 20° : Por=Fr+0.84Fa

1N=0.102kgf

| Boundary dimensions (mm) | | | | Bearing No. | | | | | | Basic dynamic load rating Cr (N) | Basic static load rating Cor (N) | Limiting speed (min-1) | | Dimensions of snap ring groove and snap ring (mm) | | | | | Abutment and fillet dimensions (mm) | | | | | Mass (kg) | Bearing No. |
|---|---|---|---|---|---|---|---|---|---|---|---|---|---|---|---|---|---|---|---|---|---|---|---|---|---|
| d | D | B | r (min) | Open type | Shield type | | Seal type | | With snap ring groove | With snap ring | | | Grease lubrication | Oil lubrication | $D_1$ (max) | a (max) | b (min) | $D_2$ (max) | f (max) | da (min) | Da (max) | Dx (min) | ra (max) | $C_Y$ (max) | | |
| 90 | 160 | 52.4 | 2 | **5218** | — | — | — | — | **5218N** | **5218NR** | 138000 | 133000 | 2700 | 3900 | 155.22 | 4.9 | 3.1 | 169.7 | 2.82 | 100 | 150 | 172 | 2 | 7.4 | 4.28 | **5218** |
| | 160 | 52.4 | 2 | **5218A** | — | — | — | — | **5218AN** | **5218ANR** | 129000 | 125000 | 2500 | 3500 | 155.22 | 4.9 | 3.1 | 169.7 | 2.82 | 100 | 150 | 172 | 2 | 7.4 | 4.28 | **5218A** |
| 95 | 170 | 55.6 | 2.1 | **5219** | — | — | — | — | **5219N** | **5219NR** | 149000 | 139000 | 2600 | 3700 | 163.65 | 5.69 | 3.5 | 182.9 | 3.1 | 107 | 158 | 185 | 2 | 8.4 | 5.02 | **5219** |
| | 170 | 55.6 | 2.1 | **5219A** | — | — | — | — | **5219AN** | **5219ANR** | 139000 | 131000 | 2400 | 3200 | 163.65 | 5.69 | 3.5 | 182.9 | 3.1 | 107 | 158 | 185 | 2 | 8.4 | 5.02 | **5219A** |
| 100 | 180 | 60.3 | 2.1 | **5220** | — | — | — | — | **5220N** | **5220NR** | 168000 | 159000 | 2400 | 3200 | 173.66 | 5.69 | 3.5 | 192.9 | 3.1 | 112 | 168 | 195 | 2 | 8.4 | 5.78 | **5220** |
| | 180 | 60.3 | 2.1 | **5220A** | — | — | — | — | **5220AN** | **5220ANR** | 158000 | 150000 | 2200 | 3000 | 173.66 | 5.69 | 3.5 | 192.9 | 3.1 | 112 | 168 | 195 | 2 | 8.4 | 5.78 | **5220A** |

Remark: Dimensions and tolerances of snap ring groove and snap ring are shown on pages 45 to 48.

# Self-aligning Ball Bearings

Tolerance ····· Page 52
Internal clearance ····· Page 64
Adapter sleeves ····· Page 592
Withdrawal sleeves ····· Page 592

## ● Design

Self-aligning Ball Bearings are particularly suitable for applications where misalignment occurs from errors in mounting or from shaft deflection.
For applications where the bearing load (particularly axial load) carrying capacity is insufficient, spherical roller bearings, which have the same self-aligning property, should be used instead.

## ● Cage

Bearings are fitted with pressed steel cage or polyamide cage.
The suffix G of bearing number on the packing surface indicate polyamide cage.

## ● Attention

(1) Maximum permissible misalignment angle $\theta$ is about 2.5° in the 11 and 22 series, and about 3° in the 13 and 23 series under general service conditions. Care must be taken to provide sufficient clearance between the bearing and surrounding structure when bearing is operating in the full misaligned condition.
(2) Misaligned bearings will have a tendency to become noisy as speed increases. Due to noise-level constraints, the practical maximum misalignment may be considerably less than the maximum misalignment.
(3) The dimension tables show the width of the ball assembly as dimension B1 for larger bore sizes of Self-aligning Ball Bearings where width of the ball assembly extends beyond the ring width envelope.
(4) It is difficult to correctly measure the running clearance of bearings with tapered bore after mounting. Mounting of this type of bearing with tapered bores requires some experience and technique.
(5) The bearings with polyamide cage should be used at less than 120°C operating temperature.

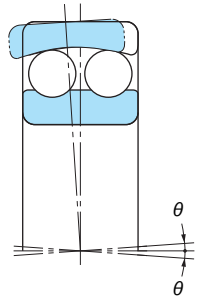

## ● Mounting bearings with tapered bore

Mounting bearings with a tapered bore requires some experience and technique. Bearings with tapered bore are always mounted with an interference fit on the shaft.
To measure the amount of interference fit on the shaft, the axial displacement of the inner ring or the reduction of radial internal clearance due to the interference fit can be used. Generally, the measurement of reduction in radial internal clearance is a more reliable method than measurement of the axial displacement of the inner ring.





**Table 1. Mounting self-aligning ball bearings with tapered bore**

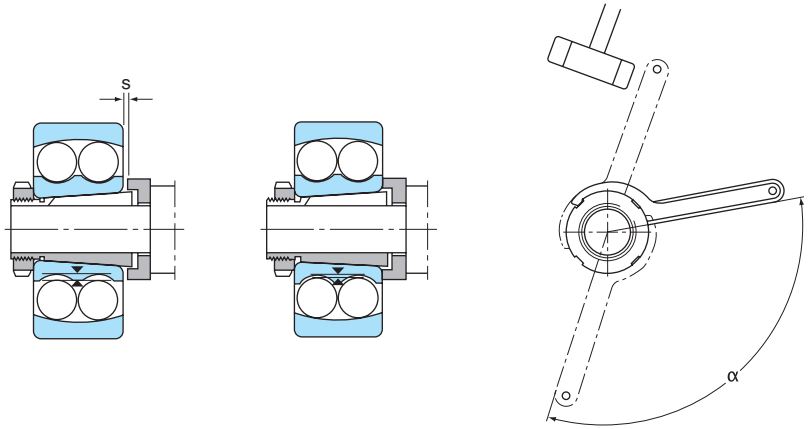


| Bearing Bore Diameter d (mm) | Tightening Angle α (degree) | Axial displacement s (mm) | | | | Mean residual clearance after mounting bearings with initial clearance | |
|---|---|---|---|---|---|---|---|
| | | Bearings series | | | | Normal (μm) | C3 (μm) |
| | | 12K | 13K | 22K | 23K | | |
| 20 | 70 | 0.22 | 0.23 | — | — | 10 | 20 |
| 25 | 70 | 0.22 | 0.23 | 0.22 | 0.23 | 10 | 20 |
| 30 | 70 | 0.22 | 0.23 | 0.22 | 0.23 | 10 | 20 |
| 35 | 70 | 0.30 | 0.30 | 0.30 | 0.30 | 10 | 20 |
| 40 | 70 | 0.30 | 0.30 | 0.30 | 0.30 | 10 | 20 |
| 45 | 70 | 0.31 | 0.34 | 0.31 | 0.33 | 15 | 25 |
| 50 | 70 | 0.31 | 0.34 | 0.31 | 0.33 | 15 | 25 |
| 55 | 90 | 0.40 | 0.41 | 0.39 | 0.40 | 15 | 30 |
| 60 | 90 | 0.40 | 0.41 | 0.39 | 0.40 | 15 | 30 |
| 65 | 90 | 0.40 | 0.41 | 0.39 | 0.40 | 15 | 30 |
| 75 | 120 | 0.45 | 0.47 | 0.43 | 0.46 | 20 | 40 |
| 80 | 120 | 0.45 | 0.47 | 0.43 | 0.46 | 20 | 40 |
| 85 | 120 | 0.58 | 0.60 | 0.54 | 0.59 | 20 | 40 |
| 90 | 120 | 0.58 | 0.60 | 0.54 | 0.59 | 20 | 40 |
| 95 | 120 | 0.58 | 0.60 | 0.54 | 0.59 | 20 | 40 |
| 100 | 120 | 0.58 | 0.60 | 0.54 | 0.59 | 20 | 40 |
| 105 | 120 | 0.67 | — | 0.66 | — | 25 | 55 |
| 110 | 120 | 0.67 | 0.70 | 0.66 | 0.69 | 25 | 55 |
| 120 | 120 | 0.67 | — | — | — | 25 | 55 |

# Self-aligning Ball Bearings

Bore Diameter: 10～40mm

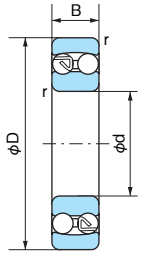


Cylindrical bore

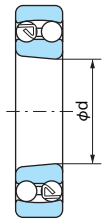


Tapered bore (Taper: 1/12)

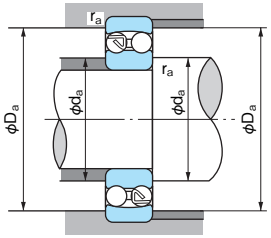


**■Dynamic equivalent radial load**

Pr=XFr+YFa

| $\frac{Fa}{Fr} \leqq e$ | | $\frac{Fa}{Fr} > e$ | |
|---|---|---|---|
| X | Y | X | Y |
| 1 | $Y_1$ | 0.65 | $Y_2$ |

**■Static equivalent radial load**

Por=Fr+YoFa

Values of e, $Y_1$, $Y_2$ and $Y_0$ from table.

1N=0.102kgf

| Boundary dimensions (mm) | | | | | Bearing No. | | Basic dynamic load rating Cr (N) | Basic static load rating Cor (N) | Limiting speed ($min^{-1}$) | | Axial load factor | | | Constant e | Abutment and fillet dimensions (mm) | | | Mass (kg) (Reference) Cylindrical bore | Bearing No. |
|---|---|---|---|---|---|---|---|---|---|---|---|---|---|---|---|---|---|---|---|
| d | D | B | $B_1$ | r (min) | Cylindrical bore | Tapered bore | | | Grease lubrication | Oil lubrication | $Y_1$ | $Y_2$ | $Y_0$ | | da (min) | Da (max) | ra (max) | | |
| 10 | 30 | 9 | — | 0.6 | **1200** | — | 5500 | 1200 | 23000 | 28000 | 1.92 | 2.97 | 2.01 | 0.33 | 14 | 26 | 0.6 | 0.034 | **1200** |
| | 30 | 14 | — | 0.6 | **2200** | — | 7400 | 1600 | 23000 | 29000 | 1.07 | 1.65 | 1.12 | 0.59 | 14 | 26 | 0.6 | 0.047 | **2200** |
| 12 | 32 | 10 | — | 0.6 | **1201** | — | 5600 | 1250 | 21000 | 26000 | 1.89 | 2.93 | 1.98 | 0.33 | 16 | 28 | 0.6 | 0.040 | **1201** |
| | 32 | 14 | — | 0.6 | **2201** | — | 7650 | 1750 | 21000 | 26000 | 1.18 | 1.83 | 1.24 | 0.53 | 16 | 28 | 0.6 | 0.053 | **2201** |
| | 37 | 12 | — | 1 | **1301** | — | 9400 | 2150 | 18000 | 22000 | 1.77 | 2.74 | 1.86 | 0.36 | 17 | 32 | 1.0 | 0.067 | **1301** |
| | 37 | 17 | — | 1 | **2301** | — | 9700 | 2300 | 16000 | 22000 | 1.17 | 1.81 | 1.23 | 0.54 | 17 | 32 | 1.0 | 0.095 | **2301** |
| 15 | 35 | 11 | — | 0.6 | **1202** | — | 7450 | 1750 | 18000 | 22000 | 1.90 | 2.95 | 2.00 | 0.33 | 19 | 31 | 0.6 | 0.049 | **1202** |
| | 35 | 14 | — | 0.6 | **2202** | — | 7700 | 1850 | 18000 | 22000 | 1.27 | 1.97 | 1.33 | 0.50 | 19 | 31 | 0.6 | 0.060 | **2202** |
| | 42 | 13 | — | 1 | **1302** | — | 9550 | 2300 | 16000 | 20000 | 1.86 | 2.88 | 1.95 | 0.34 | 20 | 37 | 1.0 | 0.094 | **1302** |
| | 42 | 17 | — | 1 | **2302** | — | 12100 | 2900 | 14000 | 20000 | 1.27 | 1.96 | 1.33 | 0.50 | 20 | 37 | 1.0 | 0.114 | **2302** |
| 17 | 40 | 12 | — | 0.6 | **1203** | — | 7900 | 2000 | 16000 | 20000 | 2.03 | 3.14 | 2.12 | 0.31 | 21 | 36 | 0.6 | 0.073 | **1203** |
| | 40 | 16 | — | 0.6 | **2203** | — | 9800 | 2400 | 16000 | 20000 | 1.27 | 1.96 | 1.33 | 0.50 | 21 | 36 | 0.6 | 0.088 | **2203** |
| | 47 | 14 | — | 1 | **1303** | — | 12500 | 3200 | 14000 | 17000 | 1.92 | 2.97 | 2.01 | 0.33 | 22 | 42 | 1.0 | 0.130 | **1303** |
| | 47 | 19 | — | 1 | **2303** | — | 14500 | 3600 | 13000 | 18000 | 1.28 | 1.98 | 1.34 | 0.49 | 22 | 42 | 1.0 | 0.158 | **2303** |
| 20 | 47 | 14 | — | 1 | **1204** | **1204K** | 9900 | 2600 | 14000 | 17000 | 2.16 | 3.35 | 2.27 | 0.29 | 25 | 42 | 1.0 | 0.120 | **1204** |
| | 47 | 18 | — | 1 | **2204** | **2204K** | 12600 | 3300 | 14000 | 17000 | 1.31 | 2.02 | 1.37 | 0.48 | 25 | 42 | 1.0 | 0.140 | **2204** |
| | 52 | 15 | — | 1.1 | **1304** | **1304K** | 12400 | 3300 | 13000 | 15000 | 2.12 | 3.28 | 2.22 | 0.30 | 26.5 | 45.5 | 1.0 | 0.163 | **1304** |
| | 52 | 21 | — | 1.1 | **2304** | **2304K** | 18000 | 4700 | 11000 | 15000 | 1.29 | 2.00 | 1.35 | 0.49 | 26.5 | 45.5 | 1.0 | 0.209 | **2304** |
| 25 | 52 | 15 | — | 1 | **1205** | **1205K** | 12100 | 3300 | 12000 | 14000 | 2.28 | 3.52 | 2.39 | 0.28 | 30 | 47 | 1.0 | 0.141 | **1205** |
| | 52 | 18 | — | 1 | **2205** | **2205K** | 12600 | 3500 | 12000 | 15000 | 1.58 | 2.45 | 1.66 | 0.40 | 30 | 47 | 1.0 | 0.163 | **2205** |
| | 62 | 17 | — | 1.1 | **1305** | **1305K** | 18000 | 5000 | 9900 | 12000 | 2.31 | 3.57 | 2.42 | 0.27 | 31.5 | 55.5 | 1.0 | 0.257 | **1305** |
| | 62 | 24 | — | 1.1 | **2305** | **2305K** | 24400 | 6600 | 9400 | 13000 | 1.36 | 2.10 | 1.42 | 0.46 | 31.5 | 55.5 | 1.0 | 0.335 | **2305** |
| 30 | 62 | 16 | — | 1 | **1206** | **1206K** | 15600 | 4650 | 9900 | 12000 | 2.55 | 3.94 | 2.67 | 0.25 | 35 | 57 | 1.0 | 0.220 | **1206** |
| | 62 | 20 | — | 1 | **2206** | **2206K** | 15600 | 4650 | 10000 | 12000 | 1.79 | 2.77 | 1.87 | 0.35 | 35 | 57 | 1.0 | 0.260 | **2206** |
| | 72 | 19 | — | 1.1 | **1306** | **1306K** | 21300 | 6300 | 8700 | 11000 | 2.40 | 3.72 | 2.52 | 0.26 | 36.5 | 65.5 | 1.0 | 0.387 | **1306** |
| | 72 | 27 | — | 1.1 | **2306** | **2306K** | 31400 | 8750 | 8000 | 11000 | 1.44 | 2.23 | 1.51 | 0.44 | 36.5 | 65.5 | 1.0 | 0.500 | **2306** |
| 35 | 72 | 17 | — | 1.1 | **1207** | **1207K** | 15800 | 5100 | 8500 | 10000 | 2.71 | 4.20 | 2.84 | 0.23 | 41.5 | 65.5 | 1.0 | 0.323 | **1207** |
| | 72 | 23 | — | 1.1 | **2207** | **2207K** | 21600 | 6600 | 8500 | 10000 | 1.71 | 2.65 | 1.79 | 0.37 | 41.5 | 65.5 | 1.0 | 0.403 | **2207** |
| | 80 | 21 | — | 1.5 | **1307** | **1307K** | 25100 | 7850 | 7600 | 9300 | 2.48 | 3.84 | 2.60 | 0.25 | 43 | 72 | 1.5 | 0.510 | **1307** |
| | 80 | 31 | — | 1.5 | **2307** | **2307K** | 39400 | 11300 | 7100 | 9800 | 1.39 | 2.15 | 1.46 | 0.45 | 43 | 72 | 1.5 | 0.675 | **2307** |
| 40 | 80 | 18 | — | 1.1 | **1208** | **1208K** | 19200 | 6500 | 7500 | 9200 | 2.83 | 4.38 | 2.97 | 0.22 | 46.5 | 73.5 | 1.0 | 0.417 | **1208** |
| | 80 | 23 | — | 1.1 | **2208** | **2208K** | 22400 | 7400 | 7600 | 9300 | 1.92 | 2.96 | 2.01 | 0.33 | 46.5 | 73.5 | 1.0 | 0.505 | **2208** |
| | 90 | 23 | — | 1.5 | **1308** | **1308K** | 29500 | 9700 | 6900 | 8400 | 2.57 | 3.98 | 2.69 | 0.25 | 48 | 82 | 1.5 | 0.715 | **1308** |
| | 90 | 33 | — | 1.5 | **2308** | **2308K** | 44900 | 13500 | 6200 | 8600 | 1.47 | 2.27 | 1.54 | 0.43 | 48 | 82 | 1.5 | 0.925 | **2308** |

Remarks: 1. Suffix K means with a tapered bore (1/12)
2. Dimension B1 is the width of the ball assembly extends beyond the ring width dimension.

# Self-aligning Ball Bearings

Bore Diameter: 45～80mm

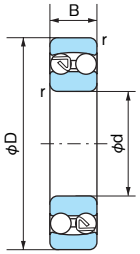


Cylindrical bore

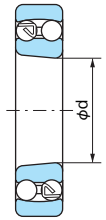


Tapered bore (Taper: 1/12)

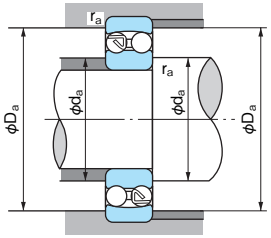


**Dynamic equivalent radial load**

Pr=XFr+YFa

| $\frac{Fa}{Fr} \leqq e$ | | $\frac{Fa}{Fr} > e$ | |
|---|---|---|---|
| X | Y | X | Y |
| 1 | $Y_1$ | 0.65 | $Y_2$ |

**Static equivalent radial load**

Por=Fr+YoFa

Values of e, $Y_1$, $Y_2$ and $Y_0$ from table.

1N=0.102kgf

| Boundary dimensions (mm) | | | | | Bearing No. | | Basic dynamic load rating Cr (N) | Basic static load rating Cor (N) | Limiting speed ($min^{-1}$) | | Axial load factor | | | Constant e | Abutment and fillet dimensions (mm) | | | Mass (kg) (Reference) Cylindrical bore | Bearing No. |
|---|---|---|---|---|---|---|---|---|---|---|---|---|---|---|---|---|---|---|---|
| d | D | B | $B_1$ | r (min) | Cylindrical bore | Tapered bore | | | Grease lubrication | Oil lubrication | $Y_1$ | $Y_2$ | $Y_0$ | | da (min) | Da (max) | ra (max) | | |
| 45 | 85 | 19 | — | 1.1 | **1209** | **1209K** | 21800 | 7350 | 7000 | 8500 | 2.94 | 4.56 | 3.09 | 0.21 | 51.5 | 78.5 | 1.0 | 0.465 | **1209** |
| | 85 | 23 | — | 1.1 | **2209** | **2209K** | 23300 | 8150 | 7000 | 8500 | 2.09 | 3.23 | 2.19 | 0.30 | 51.5 | 78.5 | 1.0 | 0.545 | **2209** |
| | 100 | 25 | — | 1.5 | **1309** | **1309K** | 38100 | 12700 | 6100 | 7500 | 2.56 | 3.95 | 2.68 | 0.25 | 53 | 92 | 1.5 | 0.957 | **1309** |
| | 100 | 36 | — | 1.5 | **2309** | **2309K** | 54400 | 16700 | 5600 | 7700 | 1.51 | 2.33 | 1.58 | 0.42 | 53 | 92 | 1.5 | 1.23 | **2309** |
| 50 | 90 | 20 | — | 1.1 | **1210** | **1210K** | 22700 | 8100 | 6500 | 7900 | 3.07 | 4.76 | 3.22 | 0.21 | 56.5 | 83.5 | 1.0 | 0.525 | **1210** |
| | 90 | 23 | — | 1.1 | **2210** | **2210K** | 23300 | 8500 | 6500 | 7900 | 2.33 | 3.61 | 2.45 | 0.27 | 56.5 | 83.5 | 1.0 | 0.590 | **2210** |
| | 110 | 27 | — | 2 | **1310** | **1310K** | 43400 | 14100 | 5600 | 6800 | 2.70 | 4.17 | 2.83 | 0.23 | 59 | 101 | 2.0 | 1.21 | **1310** |
| | 110 | 40 | — | 2 | **2310** | **2310K** | 64600 | 20300 | 5100 | 7000 | 1.56 | 2.41 | 1.63 | 0.40 | 59 | 101 | 2.0 | 1.64 | **2310** |
| 55 | 100 | 21 | — | 1.5 | **1211** | **1211K** | 26800 | 10000 | 5800 | 7100 | 3.19 | 4.94 | 3.34 | 0.20 | 63 | 92 | 1.5 | 0.705 | **1211** |
| | 100 | 25 | — | 1.5 | **2211** | **2211K** | 26800 | 10000 | 5800 | 7100 | 2.35 | 3.64 | 2.47 | 0.27 | 63 | 92 | 1.5 | 0.810 | **2211** |
| | 120 | 29 | — | 2 | **1311** | **1311K** | 51300 | 17900 | 5000 | 6200 | 2.70 | 4.18 | 2.83 | 0.23 | 64 | 111 | 2.0 | 1.58 | **1311** |
| | 120 | 43 | — | 2 | **2311** | **2311K** | 75300 | 24000 | 4600 | 6400 | 1.53 | 2.37 | 1.60 | 0.41 | 64 | 111 | 2.0 | 2.10 | **2311** |
| 60 | 110 | 22 | — | 1.5 | **1212** | **1212K** | 30200 | 11500 | 5200 | 6400 | 3.37 | 5.22 | 3.53 | 0.19 | 68 | 102 | 1.5 | 0.900 | **1212** |
| | 110 | 28 | — | 1.5 | **2212** | **2212K** | 34100 | 12600 | 5300 | 6500 | 2.26 | 3.49 | 2.36 | 0.28 | 68 | 102 | 1.5 | 1.09 | **2212** |
| | 130 | 31 | — | 2.1 | **1312** | **1312K** | 57200 | 20800 | 4500 | 5500 | 2.91 | 4.50 | 3.05 | 0.22 | 71 | 119 | 2.0 | 1.96 | **1312** |
| | 130 | 46 | — | 2.1 | **2312** | **2312K** | 87200 | 28300 | 4200 | 5800 | 1.62 | 2.51 | 1.70 | 0.39 | 71 | 119 | 2.0 | 2.60 | **2312** |
| 65 | 120 | 23 | — | 1.5 | **1213** | **1213K** | 31000 | 12500 | 4800 | 5800 | 3.67 | 5.68 | 3.84 | 0.17 | 73 | 112 | 1.5 | 1.15 | **1213** |
| | 120 | 31 | — | 1.5 | **2213** | **2213K** | 43500 | 16400 | 4900 | 5900 | 2.24 | 3.47 | 2.35 | 0.28 | 73 | 112 | 1.5 | 1.46 | **2213** |
| | 140 | 33 | — | 2.1 | **1313** | **1313K** | 61700 | 22900 | 4300 | 5200 | 2.73 | 4.23 | 2.86 | 0.23 | 76 | 129 | 2.0 | 2.45 | **1313** |
| | 140 | 48 | — | 2.1 | **2313** | **2313K** | 95800 | 32500 | 3800 | 5300 | 1.66 | 2.58 | 1.74 | 0.38 | 76 | 129 | 2.0 | 3.23 | **2313** |
| 70 | 125 | 24 | — | 1.5 | **1214** | — | 34600 | 13800 | 4600 | 5700 | 3.48 | 5.38 | 3.64 | 0.18 | 78 | 117 | 1.5 | 1.26 | **1214** |
| | 125 | 31 | — | 1.5 | **2214** | — | 43900 | 17100 | 4600 | 5600 | 2.42 | 3.74 | 2.53 | 0.26 | 78 | 117 | 1.5 | 1.52 | **2214** |
| | 150 | 35 | — | 2.1 | **1314** | — | 74000 | 27700 | 4000 | 4900 | 2.84 | 4.40 | 2.98 | 0.22 | 81 | 139 | 2.0 | 2.99 | **1314** |
| | 150 | 51 | — | 2.1 | **2314** | — | 89600 | 31700 | 3600 | 4900 | 1.82 | 2.82 | 1.91 | 0.35 | 81 | 139 | 2.0 | 4.23 | **2314** |
| 75 | 130 | 25 | — | 1.5 | **1215** | **1215K** | 38800 | 15700 | 4300 | 5300 | 3.60 | 5.58 | 3.77 | 0.17 | 83 | 122 | 1.5 | 1.36 | **1215** |
| | 130 | 31 | — | 1.5 | **2215** | **2215K** | 44200 | 17800 | 4300 | 5300 | 2.49 | 3.85 | 2.61 | 0.25 | 83 | 122 | 1.5 | 1.62 | **2215** |
| | 160 | 37 | — | 2.1 | **1315** | **1315K** | 78900 | 29900 | 4000 | 4900 | 2.80 | 4.33 | 2.93 | 0.23 | 86 | 149 | 2.0 | 3.56 | **1315** |
| | 160 | 55 | — | 2.1 | **2315** | **2315K** | 103000 | 36800 | 3400 | 4600 | 1.86 | 2.88 | 1.95 | 0.34 | 86 | 149 | 2.0 | 5.13 | **2315** |
| 80 | 140 | 26 | — | 2 | **1216** | **1216K** | 39800 | 17000 | 4000 | 4900 | 3.90 | 6.03 | 4.08 | 0.16 | 89 | 131 | 2.0 | 1.67 | **1216** |
| | 140 | 33 | — | 2 | **2216** | **2216K** | 49000 | 19900 | 4100 | 5000 | 2.42 | 3.75 | 2.54 | 0.26 | 89 | 131 | 2.0 | 2.01 | **2216** |
| | 170 | 39 | — | 2.1 | **1316** | **1316K** | 88100 | 33100 | 3500 | 4300 | 2.90 | 4.49 | 3.04 | 0.22 | 91 | 159 | 2.0 | 4.18 | **1316** |
| | 170 | 58 | — | 2.1 | **2316** | **2316K** | 129000 | 45700 | 3100 | 4300 | 1.87 | 2.90 | 1.96 | 0.34 | 91 | 159 | 2.0 | 6.10 | **2316** |

Remarks: 1. Suffix K means with a tapered bore (1/12)
2. Dimension B1 is the width of the ball assembly extends beyond the ring width dimension.

# Self-aligning Ball Bearings

Bore Diameter: 85～110mm

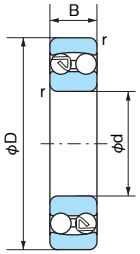


Cylindrical bore

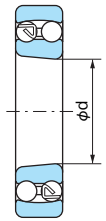


Tapered bore (Taper: 1/12)

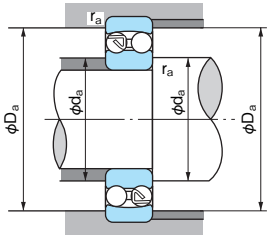


**■Dynamic equivalent radial load**

Pr=XFr+YFa

| $\frac{Fa}{Fr} \leqq e$ | | $\frac{Fa}{Fr} > e$ | |
|---|---|---|---|
| X | Y | X | Y |
| 1 | $Y_1$ | 0.65 | $Y_2$ |

**■Static equivalent radial load**

Por=Fr+YoFa

Values of e, $Y_1$, $Y_2$ and $Y_0$ from table.

1N=0.102kgf

| Boundary dimensions (mm) | | | | | Bearing No. | | Basic dynamic load rating Cr (N) | Basic static load rating Cor (N) | Limiting speed ($min^{-1}$) | | Axial load factor | | | Constant e | Abutment and fillet dimensions (mm) | | | Mass (kg) (Reference) Cylindrical bore | Bearing No. |
|---|---|---|---|---|---|---|---|---|---|---|---|---|---|---|---|---|---|---|---|
| d | D | B | $B_1$ | r (min) | Cylindrical bore | Tapered bore | | | Grease lubrication | Oil lubrication | $Y_1$ | $Y_2$ | $Y_0$ | | da (min) | Da (max) | ra (max) | | |
| 85 | 150 | 28 | — | 2 | **1217** | **1217K** | 49200 | 20800 | 3800 | 4600 | 3.61 | 5.59 | 3.78 | 0.17 | 94 | 141 | 2 | 2.07 | **1217** |
| | 150 | 36 | — | 2 | **2217** | **2217K** | 58300 | 23600 | 3800 | 4600 | 2.49 | 3.85 | 2.61 | 0.25 | 94 | 141 | 2 | 2.52 | **2217** |
| | 180 | 41 | — | 3 | **1317** | **1317K** | 97300 | 37800 | 3300 | 4000 | 2.93 | 4.53 | 3.07 | 0.22 | 98 | 167 | 2.5 | 4.98 | **1317** |
| | 180 | 60 | — | 3 | **2317** | **2317K** | 141000 | 51500 | 3000 | 4100 | 1.82 | 2.82 | 1.91 | 0.35 | 98 | 167 | 2.5 | 7.05 | **2317** |
| 90 | 160 | 30 | — | 2 | **1218** | **1218K** | 56800 | 23400 | 3500 | 4300 | 3.69 | 5.70 | 3.86 | 0.17 | 99 | 151 | 2 | 2.52 | **1218** |
| | 160 | 40 | — | 2 | **2218** | **2218K** | 67700 | 27200 | 3500 | 4300 | 2.39 | 3.71 | 2.51 | 0.26 | 99 | 151 | 2 | 3.40 | **2218** |
| | 190 | 43 | — | 3 | **1318** | **1318K** | 116000 | 44400 | 3100 | 3800 | 2.81 | 4.35 | 2.94 | 0.22 | 103 | 177 | 2.5 | 5.80 | **1318** |
| | 190 | 64 | — | 3 | **2318** | **2318K** | 153000 | 57900 | 2800 | 3900 | 1.84 | 2.85 | 1.93 | 0.34 | 103 | 177 | 2.5 | 8.44 | **2318** |
| 95 | 170 | 32 | — | 2.1 | **1219** | **1219K** | 57000 | 24300 | 3300 | 4000 | 3.63 | 5.62 | 3.80 | 0.17 | 106 | 159 | 2 | 3.10 | **1219** |
| | 170 | 43 | — | 2.1 | **2219** | **2219K** | 82700 | 34300 | 3300 | 4000 | 2.43 | 3.76 | 2.55 | 0.26 | 106 | 159 | 2 | 4.10 | **2219** |
| | 200 | 45 | 48.2 | 3 | **1319** | **1319K** | 132000 | 50800 | 2900 | 3600 | 2.73 | 4.23 | 2.86 | 0.23 | 108 | 187 | 2.5 | 6.69 | **1319** |
| | 200 | 67 | — | 3 | **2319** | **2319K** | 166000 | 64800 | 2700 | 3700 | 1.82 | 2.82 | 1.91 | 0.35 | 108 | 187 | 2.5 | 9.79 | **2319** |
| 100 | 180 | 34 | — | 2.1 | **1220** | **1220K** | 69000 | 29700 | 3100 | 3800 | 3.62 | 5.60 | 3.79 | 0.17 | 111 | 169 | 2 | 3.70 | **1220** |
| | 180 | 46 | — | 2.1 | **2220** | **2220K** | 80900 | 34000 | 3100 | 3800 | 2.57 | 3.98 | 2.70 | 0.24 | 111 | 169 | 2 | 4.98 | **2220** |
| | 215 | 47 | 52 | 3 | **1320** | **1320K** | 143000 | 57300 | 2800 | 3400 | 2.66 | 4.11 | 2.78 | 0.24 | 113 | 202 | 2.5 | 8.30 | **1320** |
| | 215 | 73 | — | 3 | **2320** | **2320K** | 183000 | 73400 | 2400 | 3400 | 1.84 | 2.85 | 1.93 | 0.34 | 113 | 202 | 2.5 | 12.4 | **2320** |
| 105 | 190 | 36 | — | 2.1 | **1221** | — | 77000 | 34000 | 2900 | 3600 | 3.56 | 5.51 | 3.73 | 0.18 | 116 | 179 | 2 | 4.37 | **1221** |
| | 190 | 50 | — | 2.1 | **2221** | — | 94900 | 40100 | 3000 | 3600 | 2.43 | 3.76 | 2.55 | 0.26 | 116 | 179 | 2 | 6.07 | **2221** |
| | 225 | 49 | 54 | 3 | **1321** | — | 149000 | 60200 | 2600 | 3200 | 2.73 | 4.22 | 2.86 | 0.23 | 118 | 212 | 2.5 | 10.0 | **1321** |
| | 225 | 77 | — | 3 | **2321** | — | 187000 | 78000 | 2300 | 3200 | 1.75 | 2.71 | 1.83 | 0.36 | 118 | 212 | 2.5 | 14.3 | **2321** |
| 110 | 200 | 38 | — | 2.1 | **1222** | **1222K** | 80200 | 35200 | 2800 | 3400 | 3.64 | 5.63 | 3.81 | 0.17 | 121 | 189 | 2 | 5.15 | **1222** |
| | 200 | 53 | — | 2.1 | **2222** | **2222K** | 120000 | 48900 | 2800 | 3400 | 2.41 | 3.73 | 2.53 | 0.26 | 121 | 189 | 2 | 7.10 | **2222** |
| | 240 | 50 | 55.2 | 3 | **1322** | **1322K** | 150000 | 63200 | 2400 | 3000 | 2.82 | 4.37 | 2.96 | 0.22 | 123 | 227 | 2.5 | 11.8 | **1322** |
| | 240 | 80 | — | 3 | **2322** | **2322K** | 200000 | 85700 | 2200 | 3000 | 1.82 | 2.82 | 1.91 | 0.35 | 123 | 227 | 2.5 | 17.3 | **2322** |

Remarks: 1. Suffix K means with a tapered bore (1/12)
2. Dimension B1 is the width of the ball assembly extends beyond the ring width dimension.

# Cylindrical Roller Bearings

Tolerance ····· Page 52
Internal clearance ····· Page 64
Axial load capacity ····· Page 34

## ● Designs and Configurations

NACHI Cylindrical Roller Bearings are produced in a wide variety of designs and configurations.

## ● Conventional Design

Cylindrical Roller Bearings of conventional design are available in 10 configurations as shown in Fig. 1. Configurations N, NU, NN and NNU will not sustain axial loading. These configurations must be used as the float end bearing.

Configurations NF, NJ, NUH are designed with the capability of sustaining axial loading in one direction. Configuration NUH is basically an NU bearing with an addition of a guide ring (an "L" ring).

The NUH dimensional data is the same as the NH bearing configuration.

Configuration NF, NJ, and NUH can sustain axial loading in one direction.

Configuration NH, NP, and NUP have bi-directional thrust load-carrying-capability.

- The suffix of the bearing number indicates:
  E: high capacity
  G: polyamide cage
- The bearing with polyamide cage should be used at less than 120˚C operating temperature.

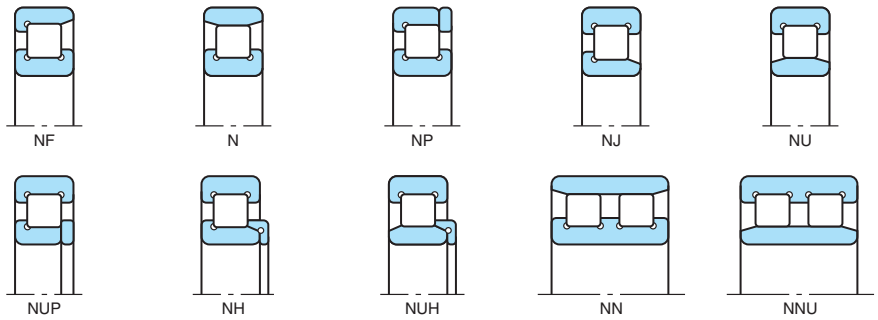


**Fig 1. Cylindrical Roller Bearing Configurations**

**Table 1. Cylindrical Roller Bearing Standard Cage**

| Bearing series | Pressed Steel | Machined Brass |
|---|---|---|
| NU10 | 1007～1038 | 1040～10/500 |
| NU2 | 203～ 228 | 230～ 264 |
| NU22 | 2204～2226 | 2228～2252 |
| NU3 | 304～ 324 | 326～ 352 |
| NU23 | 2304～2319 | 2320～2340 |
| NU4 | 405～ 416 | 417～ 430 |

## ● Interchangeable Bearings

Interchangeable cylindrical roller bearing means that a separable ring can be replaced by another ring of the bearing with the same bearing number without impairing the function of the bearing.

**Table 2. Interchangeable Cylindrical Roller Bearings: Tolerance of Inscribed (Fw) and Circumscribed (Ew) Diameters**

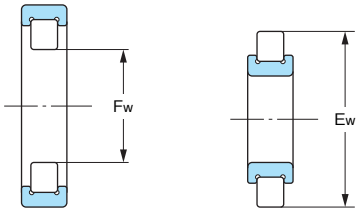


Unit: µm

| Nominal bore dia. d (mm) | | Tolerance of Fw | | Tolerance of Ew | |
|---|---|---|---|---|---|
| Over | Incl. | High | Low | High | Low |
| — | 20 | +10 | 0 | 0 | –10 |
| 20 | 50 | +15 | 0 | 0 | –15 |
| 50 | 120 | +20 | 0 | 0 | –20 |
| 120 | 200 | +25 | 0 | 0 | –25 |
| 200 | 250 | +30 | 0 | 0 | –30 |
| 250 | 315 | +35 | 0 | 0 | –35 |
| 315 | 400 | +40 | 0 | 0 | –40 |
| 400 | 500 | +45 | 0 | — | — |

## ● Radial Internal Clearance

The initial radial internal clearance of the bearing should be determined for optimal bearing operation.

The following procedure should be observed to determine the proper initial radial internal clearance:

(a) Place the bearing in an upright position with inner/outer ring faces parallel.
(b) Place thumbs on inner ring bore and oscillate inner ring two or three times, pressing down firmly. This "seats" the inner ring and rollers.
(c) Position the individual roller assemblies so that a roller is at the top of inner ring - on both sides of the bearing.
(d) Press the two rollers inward to assure contact with the center guide ring as well as the inner ring raceway.
(e) With the rollers in correct position, insert a thin feeler gauge between the rollers and the raceway. Caution : DO NOT ROLL THE BEARING.
(f) Move it carefully over the top roller between the roller and outer raceway.
(g) Repeat this procedure, using progressively thicker feeler gauge until one is found that will not go through.
(h) The gauge thickness that preceded the "No - GO" gauge is the radial internal clearance.

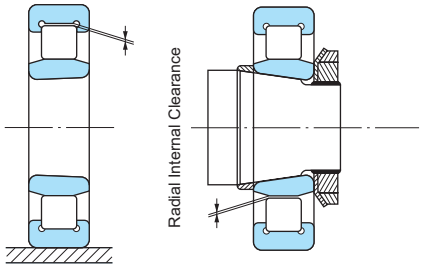






**Table 3. Mounting cylindrical roller bearings with tapered bore**

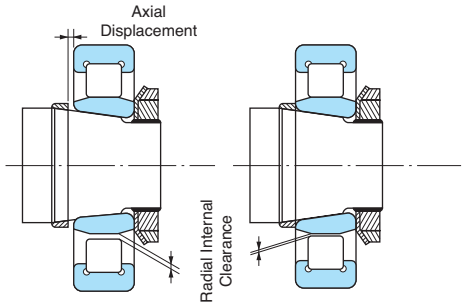


Unit: µm

| Bearing Bore Diameter d (mm) | | Radial Clearance Reduction (mm) | | Axial displacement Taper 1:12 | | | |
|---|---|---|---|---|---|---|---|
| | | | | Direct Mounting on the shaft (mm) | | With Adapter Assemblies (mm) | |
| Over | Incl. | min | max | min | max | max | min |
| 40 | 50 | 0.025 | 0.030 | 0.40 | 0.50 | 0.55 | 0.60 |
| 50 | 65 | 0.030 | 0.035 | 0.50 | 0.55 | 0.60 | 0.70 |
| 65 | 80 | 0.030 | 0.040 | 0.50 | 0.65 | 0.60 | 0.75 |
| 80 | 100 | 0.035 | 0.045 | 0.55 | 0.70 | 0.70 | 0.85 |
| 100 | 120 | 0.040 | 0.050 | 0.65 | 0.80 | 0.75 | 0.90 |
| 120 | 140 | 0.045 | 0.055 | 0.70 | 0.85 | 0.85 | 1.00 |
| 140 | 160 | 0.045 | 0.060 | 0.70 | 0.95 | 0.85 | 1.05 |
| 160 | 180 | 0.050 | 0.065 | 0.80 | 1.00 | 0.90 | 1.15 |
| 180 | 200 | 0.055 | 0.070 | 0.85 | 1.10 | 1.00 | 1.20 |
| 200 | 225 | 0.065 | 0.080 | 1.00 | 1.25 | 1.15 | 1.35 |
| 225 | 250 | 0.070 | 0.085 | 1.10 | 1.30 | 1.20 | 1.45 |
| 250 | 280 | 0.075 | 0.095 | 1.15 | 1.45 | 1.30 | 1.60 |
| 280 | 315 | 0.080 | 0.100 | 1.25 | 1.55 | 1.35 | 1.65 |
| 315 | 355 | 0.095 | 0.115 | 1.45 | 1.75 | 1.60 | 1.90 |
| 355 | 400 | 0.100 | 0.125 | 1.55 | 1.90 | 1.65 | 2.05 |
| 400 | 450 | 0.115 | 0.140 | 1.80 | 2.20 | 1.90 | 2.30 |
| 450 | 500 | 0.130 | 0.160 | 2.00 | 2.50 | 2.10 | 2.60 |

Note: 1. The axial displacement values are applied for mounting on a solid shaft. In case of a hollow shaft, larger axial displacement should be applied.
2. It is imperative to check radial internal clearance after mounting when ;
- The initial unmounted radial internal clearance is in the lower half of the tolerance range.
- There is a temperature difference between the inner and outer rings under operating conditions.
Internal clearance after mounting must be above the values shown in the table.

# Cylindrical Roller Bearings

Bore Diameter: 17～30mm

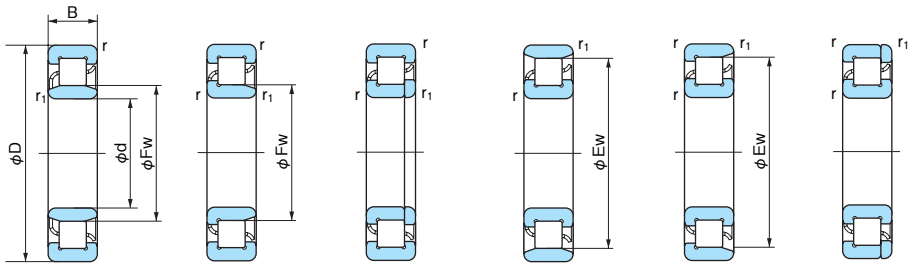


NU NJ NUP N NF NP

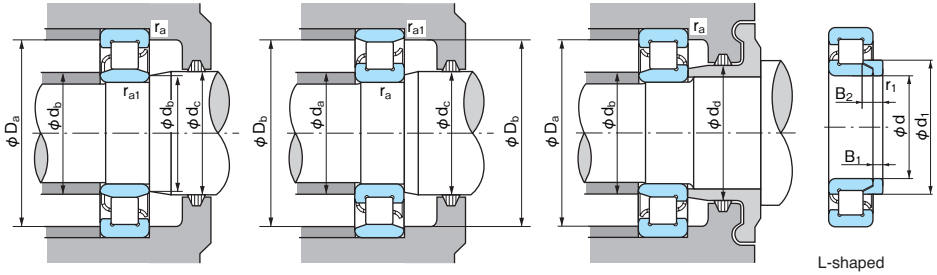


L-shaped thrust collar

1N=0.102kgf

| Boundary dimensions (mm) | | | | | | | Bearing No. | | | | | | Basic dynamic load rating Cr (N) | Basic static load rating Cor (N) | Limiting speed (min⁻¹)(1) | | Abutment and fillet dimensions (mm) | | | | | | | | | | Mass (kg) | | Dimensions of L-shaped thrust collar (mm) | | | | | | |
|---|---|---|---|---|---|---|---|---|---|---|---|---|---|---|---|---|---|---|---|---|---|---|---|---|---|---|---|---|---|---|---|---|---|---|---|
| d | D | B | Ew | Fw | r (min) | r1 (min) | NU | NJ | NUP | N | NF | NP | | | Grease lubrication | Oil lubrication | da (min) | db (min) | db (max) | dc (min) | dd (min) | Da (max) | Db (max) | Db (min) | ra (max) | ra1 (max) | NU | N | Bearing No. | d | d1 (max) | B1 | B2 | r1 (min) | Mass (kg) Reference |
| 17 | 40 | 12 | 33.9 | 22.9 | 0.6 | 0.3 | NU 203 | NJ | NUP | N | NF | NP | 12600 | 7950 | 16000 | 19000 | 22 | 19 | 22 | 24 | 25 | 35 | 34 | 34 | 0.6 | 0.3 | 0.082 | 0.080 | — | — | — | — | — | — | — |
| 20 | 47 | 14 | 40 | 27 | 1 | 0.6 | NU 204 | NJ | NUP | N | NF | NP | 15400 | 12700 | 15000 | 18000 | 26 | 25 | 26 | 29 | 32 | 41 | 42 | 42 | 1 | 0.6 | 0.112 | 0.110 | HJ 204 | 20 | 30 | 3 | 6.75 | 0.6 | 0.012 |
| | 47 | 14 | — | 26.5 | 1 | 0.6 | NU 204 E | NJ | NUP | — | — | — | 25700 | 22600 | 13000 | 16000 | — | 25 | 26 | 29 | 32 | 41 | — | — | 1 | 0.6 | 0.124 | — | HJ 204 E | 20 | 29.8 | 3 | 5.5 | 0.6 | 0.011 |
| | 47 | 18 | — | 27 | 1 | 0.6 | NU 2204 | NJ | NUP | — | — | — | 20700 | 18400 | 14000 | 17000 | — | 25 | 26 | 29 | 32 | 41 | — | — | 1 | 0.6 | 0.144 | — | HJ 2204 | 20 | 30 | 3 | 7.5 | 0.6 | 0.012 |
| | 47 | 18 | — | 26.5 | 1 | 0.6 | NU 2204 E | NJ | NUP | — | — | — | 30500 | 28300 | 13000 | 16000 | — | 25 | 26 | 29 | 32 | 41 | — | — | 1 | 0.6 | 0.162 | — | HJ 2204 E | 20 | 29.8 | 3 | 6.5 | 0.6 | 0.011 |
| | 52 | 15 | 44.5 | 28.5 | 1.1 | 0.6 | NU 304 | NJ | NUP | N | NF | NP | 21400 | 17300 | 12000 | 15000 | 27 | 25 | 27 | 30 | 33 | 45 | 47 | 47 | 1 | 0.6 | 0.154 | 0.150 | HJ 304 | 20 | 31.8 | 4 | 7.5 | 0.6 | 0.017 |
| | 52 | 15 | — | 27.5 | 1.1 | 0.6 | NU 304 EG | NJ | NUP | — | — | — | 31500 | 26900 | 12000 | 15000 | — | 25 | 27 | 30 | 33 | 45 | — | — | 1 | 0.6 | 0.150 | — | HJ 304 E | 20 | 31.4 | 4 | 6.5 | 0.6 | 0.016 |
| | 52 | 21 | — | 28.5 | 1.1 | 0.6 | NU 2304 | NJ | NUP | — | — | — | 30500 | 27200 | 11000 | 14000 | — | 25 | 27 | 30 | 33 | 45 | — | — | 1 | 0.6 | 0.213 | — | HJ 2304 | 20 | 31.8 | 4 | 8.5 | 0.6 | 0.018 |
| | 52 | 21 | — | 27.5 | 1.1 | 0.6 | NU 2304 E | NJ | NUP | — | — | — | 42000 | 39000 | 11000 | 14000 | — | 25 | 27 | 30 | 33 | 45 | — | — | 1 | 0.6 | 0.240 | — | HJ 2304 E | 20 | 31.4 | 4 | 7.5 | 0.6 | 0.017 |
| 25 | 47 | 12 | 41.5 | 30.5 | 0.6 | 0.3 | NU 1005 | — | — | N | — | — | 14300 | 13100 | 15000 | 18000 | 29 | 27.5 | 30 | 32 | — | 42 | 45 | 41.8 | 0.6 | 0.3 | 0.086 | 0.084 | — | — | — | — | — | — | — |
| | 52 | 15 | 45 | 32 | 1 | 0.6 | NU 205 | NJ | NUP | N | NF | NP | 17700 | 15700 | 13000 | 16000 | 31 | 30 | 31 | 34 | 37 | 46 | 47 | 47 | 1 | 0.6 | 0.133 | 0.130 | HJ 205 | 25 | 35 | 3 | 7.25 | 0.6 | 0.015 |
| | 52 | 15 | — | 31.5 | 1 | 0.6 | NU 205 EG | NJ | NUP | — | — | — | 29300 | 27700 | 12000 | 14000 | — | 30 | 31 | 34 | 37 | 46 | — | — | 1 | 0.6 | 0.140 | — | HJ 205 E | 25 | 34.8 | 3 | 6 | 0.6 | 0.013 |
| | 52 | 18 | — | 32 | 1 | 0.6 | NU 2205 | NJ | NUP | — | — | — | 24300 | 23500 | 12000 | 14000 | — | 30 | 31 | 34 | 37 | 46 | — | — | 1 | 0.6 | 0.163 | — | HJ 2205 | 25 | 35 | 3 | 7.5 | 0.6 | 0.016 |
| | 52 | 18 | — | 31.5 | 1 | 0.6 | NU 2205 EG | NJ | NUP | — | — | — | 35000 | 34500 | 12000 | 14000 | — | 30 | 31 | 34 | 37 | 46 | — | — | 1 | 0.6 | 0.185 | — | HJ 2205 E | 25 | 34.8 | 3 | 6.5 | 0.6 | 0.015 |
| | 62 | 17 | 53 | 35 | 1.1 | 1.1 | NU 305 | NJ | NUP | N | NF | NP | 29300 | 25200 | 10000 | 13000 | 32 | 32 | 33 | 37 | 40 | 55 | 55 | 55 | 1 | 1 | 0.238 | 0.230 | HJ 305 | 25 | 39 | 4 | 8 | 1.1 | 0.027 |
| | 62 | 17 | — | 34 | 1.1 | 1.1 | NU 305 EG | NJ | NUP | — | — | — | 41500 | 37500 | 10000 | 12000 | — | 32 | 33 | 37 | 40 | 55 | — | — | 1 | 1 | 0.240 | — | HJ 305 E | 25 | 38.2 | 4 | 7 | 1.1 | 0.024 |
| | 62 | 24 | — | 35 | 1.1 | 1.1 | NU 2305 | NJ | NUP | — | — | — | 42500 | 41000 | 9300 | 11000 | — | 32 | 33 | 37 | 40 | 55 | — | — | 1 | 1 | 0.340 | — | HJ 2305 | 25 | 39 | 4 | 9 | 1.1 | 0.029 |
| | 62 | 24 | — | 34 | 1.1 | 1.1 | NU 2305 E | NJ | NUP | — | — | — | 57000 | 56000 | 9000 | 11000 | — | 32 | 33 | 37 | 40 | 55 | — | — | 1 | 1 | 0.390 | — | HJ 2305 E | 25 | 38.2 | 4 | 8 | 1.1 | 0.026 |
| | 80 | 21 | 62.8 | 38.8 | 1.5 | 1.5 | NU 405 | NJ | NUP | N | NF | NP | 46500 | 40000 | 9000 | 11000 | 33.5 | 33.5 | 38 | 41 | 46 | 71.5 | 71.5 | 64 | 1.5 | 1.5 | 0.564 | 0.550 | HJ 405 | 25 | 43.6 | 6 | 10.5 | 1.5 | 0.054 |
| 30 | 55 | 13 | 48.5 | 36.5 | 1 | 0.6 | NU 1006 | — | — | N | — | — | 19700 | 19600 | 12000 | 15000 | 35 | 33.5 | 35 | 38 | — | 49 | 52 | 49 | 1 | 0.6 | 0.123 | 0.121 | — | — | — | — | — | — | — |
| | 62 | 16 | 53.5 | 38.5 | 1 | 0.6 | NU 206 | NJ | NUP | N | NF | NP | 23500 | 21500 | 11000 | 13000 | 36 | 35 | 37 | 40 | 44 | 56 | 57 | 56 | 1 | 0.6 | 0.204 | 0.200 | HJ 206 | 30 | 41.8 | 4 | 8.25 | 0.6 | 0.026 |
| | 62 | 16 | — | 37.5 | 1 | 0.6 | NU 206 EG | NJ | NUP | — | — | — | 39000 | 37500 | 9500 | 12000 | — | 35 | 37 | 40 | 44 | 56 | — | — | 1 | 0.6 | 0.210 | — | HJ 206 E | 30 | 41.4 | 4 | 7 | 0.6 | 0.024 |
| | 62 | 20 | — | 38.5 | 1 | 0.6 | NU 2206 | NJ | NUP | — | — | — | 33000 | 33000 | 10000 | 12000 | — | 35 | 37 | 40 | 44 | 56 | — | — | 1 | 0.6 | 0.262 | — | HJ 2206 | 30 | 41.8 | 4 | 8.5 | 0.6 | 0.026 |
| | 62 | 20 | — | 37.5 | 1 | 0.6 | NU 2206 EG | NJ | NUP | — | — | — | 49000 | 50000 | 9500 | 12000 | — | 35 | 37 | 40 | 44 | 56 | — | — | 1 | 0.6 | 0.295 | — | HJ 2206 E | 30 | 41.4 | 4 | 7.5 | 0.6 | 0.025 |
| | 72 | 19 | 62 | 42 | 1.1 | 1.1 | NU 306 | NJ | NUP | N | NF | NP | 38500 | 35000 | 8500 | 11000 | 37 | 37 | 40 | 44 | 48 | 65 | 65 | 64 | 1 | 1 | 0.357 | 0.350 | HJ 306 | 30 | 45.9 | 5 | 9.5 | 1.1 | 0.044 |
| | 72 | 19 | — | 40.5 | 1.1 | 1.1 | NU 306 EG | NJ | NUP | — | — | — | 53000 | 50000 | 8500 | 10000 | — | 37 | 40 | 44 | 48 | 65 | — | — | 1 | 1 | 0.370 | — | HJ 306 E | 30 | 45.1 | 5 | 8.5 | 1.1 | 0.041 |
| | 72 | 27 | — | 42 | 1.1 | 1.1 | NU 2306 | NJ | NUP | — | — | — | 51500 | 51000 | 8200 | 9800 | — | 37 | 40 | 44 | 48 | 65 | — | — | 1 | 1 | 0.500 | — | HJ 2306 | 30 | 45.9 | 5 | 11.5 | 1.1 | 0.048 |
| | 72 | 27 | — | 40.5 | 1.1 | 1.1 | NU 2306 E | NJ | NUP | — | — | — | 74500 | 77500 | 8000 | 9500 | — | 37 | 40 | 44 | 48 | 65 | — | — | 1 | 1 | 0.585 | — | HJ 2306 E | 30 | 45.1 | 5 | 9.5 | 1.1 | 0.043 |
| | 90 | 23 | 73 | 45 | 1.5 | 1.5 | NU 406 | NJ | NUP | N | NF | NP | 62500 | 55000 | 7500 | 9500 | 38.5 | 38.5 | 44 | 47 | 52 | 81.5 | 81.5 | 74 | 1.5 | 1.5 | 0.770 | 0.750 | HJ 406 | 30 | 50.5 | 7 | 11.5 | 1.5 | 0.080 |

Note: (1) The dimension table shows limiting speed for bearings made with machined cages. For bearings made with pressed steel cages, multiply the table limits by 0.8.

# Cylindrical Roller Bearings

Bore Diameter: 35～45mm

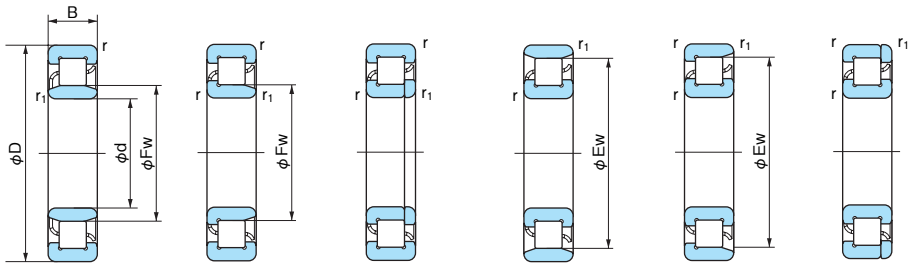


NU NJ NUP N NF NP

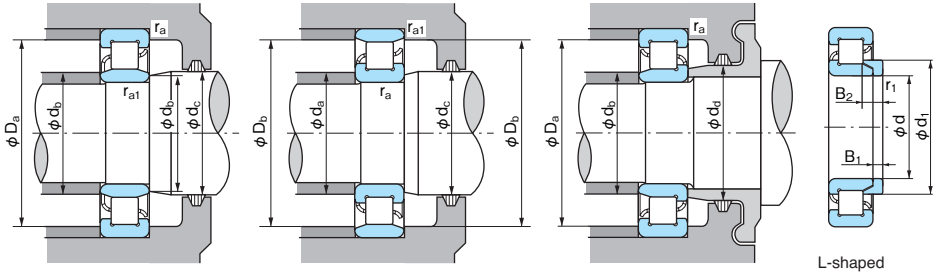


L-shaped thrust collar

1N=0.102kgf

| Boundary dimensions (mm) | | | | | | | Bearing No. | | | | | | Basic dynamic load rating Cr (N) | Basic static load rating Cor (N) | Limiting speed (min⁻¹)(1) | | Abutment and fillet dimensions (mm) | | | | | | | | | | Mass (kg) | | Dimensions of L-shaped thrust collar (mm) | | | | | | |
|---|---|---|---|---|---|---|---|---|---|---|---|---|---|---|---|---|---|---|---|---|---|---|---|---|---|---|---|---|---|---|---|---|---|---|---|
| d | D | B | Ew | Fw | r (min) | r1 (min) | NU | NJ | NUP | N | NF | NP | | | Grease lubrication | Oil lubrication | da (min) | db (min) | db (max) | dc (min) | dd (min) | Da (max) | Db (max) | Db (min) | ra (max) | ra1 (max) | NU | N | Bearing No. | d | d1 (max) | B1 | B2 | r1 (min) | Mass (kg) Reference |
| 35 | 62 | 14 | 55 | 42 | 1 | 0.6 | NU 1007 | — | — | N | — | — | 22600 | 23200 | 11000 | 13000 | 40 | 38.5 | 41 | 44 | — | 56 | 59 | 55.5 | 1 | 0.6 | 0.185 | 0.182 | — | — | — | — | — | — | — |
| | 72 | 17 | 61.8 | 43.8 | 1.1 | 0.6 | NU 207 | NJ | NUP | N | NF | NP | 33500 | 31500 | 9500 | 11000 | 42 | 40 | 43 | 46 | 50 | 65 | 67 | 64 | 1 | 0.6 | 0.295 | 0.290 | HJ 207 | 35 | 47.6 | 4 | 8 | 0.6 | 0.032 |
| | 72 | 17 | — | 44 | 1.1 | 0.6 | NU 207 EG | NJ | NUP | — | — | — | 50500 | 50000 | 8500 | 10000 | — | 40 | 43 | 46 | 50 | 65 | — | — | 1 | 0.6 | 0.300 | — | HJ 207 E | 35 | 48.2 | 4 | 7 | 0.6 | 0.032 |
| | 72 | 23 | — | 43.8 | 1.1 | 0.6 | NU 2207 | NJ | NUP | — | — | — | 49000 | 51000 | 8500 | 10000 | — | 40 | 43 | 46 | 50 | 65 | — | — | 1 | 0.6 | 0.402 | — | HJ 2207 | 35 | 47.6 | 4 | 8.5 | 0.6 | 0.033 |
| | 72 | 23 | — | 44 | 1.1 | 0.6 | NU 2207 EG | NJ | NUP | — | — | — | 61500 | 65000 | 8500 | 10000 | — | 40 | 43 | 46 | 50 | 65 | — | — | 1 | 0.6 | 0.446 | — | HJ 2207 E | 35 | 48.2 | 4 | 8.5 | 0.6 | 0.035 |
| | 80 | 21 | 68.2 | 46.2 | 1.5 | 1.1 | NU 307 | NJ | NUP | N | NF | NP | 49500 | 47000 | 8000 | 9500 | 43.5 | 42 | 45 | 48 | 53 | 71.5 | 73 | 71 | 1.5 | 1 | 0.470 | 0.460 | HJ 307 | 35 | 50.8 | 6 | 11 | 1.1 | 0.060 |
| | 80 | 21 | — | 46.2 | 1.5 | 1.1 | NU 307 EG | NJ | NUP | — | — | — | 66500 | 65500 | 7500 | 9500 | — | 42 | 45 | 48 | 53 | 71.5 | — | — | 1.5 | 1 | 0.490 | — | HJ 307 E | 35 | 51.1 | 6 | 9.5 | 1.1 | 0.058 |
| | 80 | 31 | — | 46.2 | 1.5 | 1.1 | NU 2307 | NJ | NUP | — | — | — | 60500 | 60000 | 7200 | 8600 | — | 42 | 45 | 48 | 53 | 71.5 | — | — | 1.5 | 1 | 0.696 | — | HJ 2307 | 35 | 50.8 | 6 | 14 | 1.1 | 0.067 |
| | 80 | 31 | — | 46.2 | 1.5 | 1.1 | NU 2307 E | NJ | NUP | — | — | — | 99000 | 109000 | 6800 | 8500 | — | 42 | 45 | 48 | 53 | 71.5 | — | — | 1.5 | 1 | 0.780 | — | HJ 2307 E | 35 | 51.1 | 6 | 11 | 1.1 | 0.062 |
| | 100 | 25 | 83 | 53 | 1.5 | 1.5 | NU 407 | NJ | NUP | — | NF | NP | 75500 | 69000 | 6700 | 8000 | 43.5 | 43.5 | 52 | 55 | 61 | 91.5 | 91.5 | 84 | 1.5 | 1.5 | 1.05 | 1.02 | HJ 407 | 35 | 59 | 8 | 13 | 1.5 | 0.120 |
| 40 | 68 | 15 | 61 | 47 | 1 | 0.6 | NU 1008 | — | — | N | — | — | 27300 | 29000 | 10000 | 12000 | 45 | 45 | 46 | 49 | — | 62 | 64 | 61.5 | 1 | 0.6 | 0.226 | 0.223 | — | — | — | — | — | — | — |
| | 80 | 18 | 70 | 50 | 1.1 | 1.1 | NU 208 | NJ | NUP | N | NF | NP | 43500 | 43000 | 8500 | 10000 | 47 | 47 | 49 | 52 | 56 | 73 | 73 | 72 | 1 | 1 | 0.369 | 0.360 | HJ 208 | 40 | 54.2 | 5 | 9 | 1.1 | 0.049 |
| | 80 | 18 | — | 49.5 | 1.1 | 1.1 | NU 208 EG | NJ | NUP | — | — | — | 55500 | 55500 | 9500 | 9000 | — | 47 | 49 | 52 | 56 | 73 | — | — | 1 | 1 | 0.380 | — | HJ 208 E | 40 | 54.1 | 5 | 8.5 | 1.1 | 0.047 |
| | 80 | 23 | — | 50 | 1.1 | 1.1 | NU 2208 | NJ | NUP | — | — | — | 58000 | 62000 | 7500 | 9000 | — | 47 | 49 | 52 | 56 | 73 | — | — | 1 | 1 | 0.490 | — | HJ 2208 | 40 | 54.2 | 5 | 9.5 | 1.1 | 0.050 |
| | 80 | 23 | — | 49.5 | 1.1 | 1.1 | NU 2208 EG | NJ | NUP | — | — | — | 72500 | 77500 | 7500 | 9000 | — | 47 | 49 | 52 | 56 | 73 | — | — | 1 | 1 | 0.743 | — | HJ 2208 E | 40 | 54.1 | 5 | 9 | 1.1 | 0.049 |
| | 90 | 23 | 77.5 | 53.5 | 1.5 | 1.5 | NU 308 | NJ | NUP | N | NF | NP | 58500 | 57000 | 6700 | 8500 | 48.5 | 48.5 | 51 | 55 | 60 | 81.5 | 81.5 | 80 | 1.5 | 1.5 | 0.665 | 0.650 | HJ 308 | 40 | 58.4 | 7 | 12.5 | 1.5 | 0.090 |
| | 90 | 23 | — | 52 | 1.5 | 1.5 | NU 308 EG | NJ | NUP | — | — | — | 83000 | 81500 | 6700 | 8000 | — | 48.5 | 51 | 55 | 60 | 81.5 | — | — | 1.5 | 1.5 | 0.670 | — | HJ 308 E | 40 | 57.7 | 7 | 11 | 1.5 | 0.084 |
| | 90 | 33 | — | 53.5 | 1.5 | 1.5 | NU 2308 | NJ | NUP | — | — | — | 82500 | 88000 | 6500 | 7800 | — | 48.5 | 51 | 55 | 60 | 81.5 | — | — | 1.5 | 1.5 | 0.956 | — | HJ 2308 | 40 | 58.4 | 7 | 14.5 | 1.5 | 0.097 |
| | 90 | 33 | — | 52 | 1.5 | 1.5 | NU 2308 E | NJ | NUP | — | — | — | 114000 | 122000 | 6400 | 7700 | — | 48.5 | 51 | 55 | 60 | 81.5 | — | — | 1.5 | 1.5 | 1.05 | — | HJ 2308 E | 40 | 57.7 | 7 | 12.5 | 1.5 | 0.090 |
| | 110 | 27 | 92 | 58 | 2 | 2 | NU 408 | NJ | NUP | N | NF | NP | 95500 | 89000 | 6000 | 7500 | 50 | 50 | 57 | 60 | 67 | 100 | 100 | 93 | 2 | 2 | 1.33 | 1.30 | HJ 408 | 40 | 64.8 | 8 | 13 | 2 | 0.144 |
| 45 | 75 | 16 | 67.5 | 52.5 | 1 | 0.6 | NU 1009 | — | — | N | — | — | 32500 | 35500 | 9000 | 11000 | 50 | 50 | 52 | 54 | — | 69 | 71 | 68 | 1 | 0.6 | 0.284 | 0.289 | — | — | — | — | — | — | — |
| | 85 | 19 | 75 | 55 | 1.1 | 1.1 | NU 209 | NJ | NUP | N | NF | NP | 46000 | 47000 | 7500 | 9000 | 52 | 52 | 54 | 57 | 61 | 78 | 78 | 77 | 1 | 1 | 0.430 | 0.420 | HJ 209 | 45 | 59 | 5 | 9.5 | 1.1 | 0.054 |
| | 85 | 19 | — | 54.5 | 1.1 | 1.1 | NU 209 EG | NJ | NUP | — | — | — | 63000 | 66500 | 7000 | 8500 | — | 52 | 54 | 57 | 61 | 78 | — | — | 1 | 1 | 0.440 | — | HJ 209 E | 45 | 59.1 | 5 | 8.5 | 1.1 | 0.053 |
| | 85 | 23 | — | 55 | 1.1 | 1.1 | NU 2209 | NJ | NUP | — | — | — | 61500 | 68000 | 7400 | 8900 | — | 52 | 54 | 57 | 61 | 78 | — | — | 1 | 1 | 0.536 | — | HJ 2209 | 45 | 59 | 5 | 9.5 | 1.1 | 0.054 |
| | 85 | 23 | — | 54.5 | 1.1 | 1.1 | NU 2209 EG | NJ | NUP | — | — | — | 76000 | 84500 | 7000 | 8500 | — | 52 | 54 | 57 | 61 | 78 | — | — | 1 | 1 | 0.593 | — | HJ 2209 E | 45 | 59.1 | 5 | 9 | 1.1 | 0.054 |
| | 100 | 25 | 86.5 | 58.5 | 1.5 | 1.5 | NU 309 | NJ | NUP | N | NF | NP | 78500 | 77500 | 6300 | 7500 | 53.5 | 53.5 | 57 | 60 | 66 | 91.5 | 91.5 | 89 | 1.5 | 1.5 | 0.871 | 0.850 | HJ 309 | 45 | 64 | 7 | 12.5 | 1.5 | 0.105 |
| | 100 | 25 | — | 58.5 | 1.5 | 1.5 | NU 309 EG | NJ | NUP | — | — | — | 97500 | 98500 | 6000 | 7500 | — | 53.5 | 57 | 60 | 66 | 91.5 | — | — | 1.5 | 1.5 | 0.910 | — | HJ 309 E | 45 | 64.5 | 7 | 11.5 | 1.5 | 0.103 |
| | 100 | 36 | — | 58.5 | 1.5 | 1.5 | NU 2309 | NJ | NUP | — | — | — | 99000 | 104000 | 6100 | 7300 | — | 53.5 | 57 | 60 | 66 | 91.5 | — | — | 1.5 | 1.5 | 1.25 | — | HJ 2309 | 45 | 64 | 7 | 15 | 1.5 | 0.115 |
| | 100 | 36 | — | 58.5 | 1.5 | 1.5 | NU 2309 E | NJ | NUP | — | — | — | 137000 | 153000 | 6000 | 7200 | — | 53.5 | 57 | 60 | 66 | 91.5 | — | — | 1.5 | 1.5 | 1.40 | — | HJ 2309 E | 45 | 64.5 | 7 | 13 | 1.5 | 0.112 |
| | 120 | 29 | 100.5 | 64.5 | 2 | 2 | NU 409 | NJ | NUP | N | NF | NP | 107000 | 102000 | 5600 | 6700 | 55 | 55 | 63 | 66 | 74 | 110 | 110 | 102 | 2 | 2 | 1.67 | 1.64 | HJ 409 | 45 | 71.8 | 8 | 13.5 | 2 | 0.176 |

Note: (1) The dimension table shows limiting speed for bearings made with machined cages. For bearings made with pressed steel cages, multiply the table limits by 0.8.

# Cylindrical Roller Bearings

Bore Diameter: 50～60mm

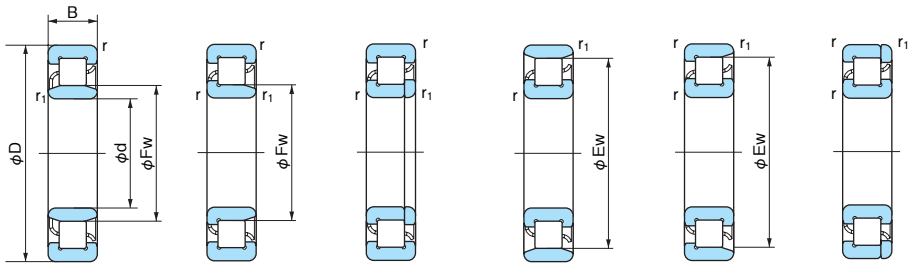


NU NJ NUP N NF NP

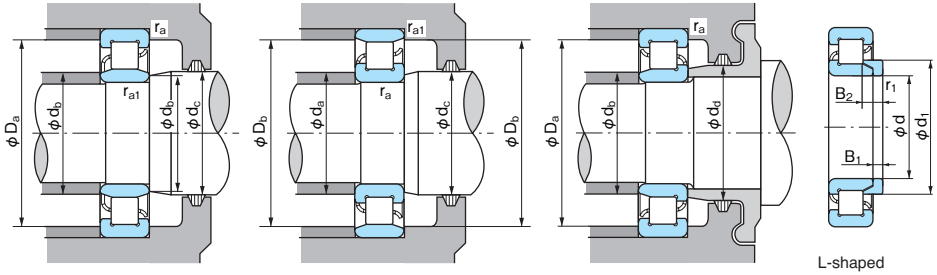


L-shaped thrust collar

1N=0.102kgf

| Boundary dimensions (mm) | | | | | | | Bearing No. | | | | | | Basic dynamic load rating Cr (N) | Basic static load rating Cor (N) | Limiting speed (min⁻¹)(1) | | Abutment and fillet dimensions (mm) | | | | | | | | | | Mass (kg) | | Dimensions of L-shaped thrust collar (mm) | | | | | | |
|---|---|---|---|---|---|---|---|---|---|---|---|---|---|---|---|---|---|---|---|---|---|---|---|---|---|---|---|---|---|---|---|---|---|---|---|
| d | D | B | Ew | Fw | r (min) | r1 (min) | NU | NJ | NUP | N | NF | NP | | | Grease lubrication | Oil lubrication | da (min) | db (min) | db (max) | dc (min) | dd (min) | Da (max) | Db (max) | Db (min) | ra (max) | ra1 (max) | NU | N | Bearing No. | d | d1 (max) | B1 | B2 | r1 (min) | Mass (kg) Reference |
| 50 | 80 | 16 | 72.5 | 57.5 | 1 | 0.6 | NU 1010 | — | — | N | — | — | 32000 | 36000 | 8500 | 10000 | 53 | 55 | 57 | 59 | — | 74 | 76 | 73 | 1 | 0.6 | 0.310 | 0.306 | — | — | — | — | — | — | — |
| | 90 | 20 | 80.4 | 60.4 | 1.1 | 1.1 | NU 210 | NJ | NUP | N | NF | NP | 48000 | 51000 | 7100 | 8500 | 57 | 57 | 58 | 62 | 67 | 83 | 83 | 83 | 1 | 1 | 0.481 | 0.470 | HJ 210 | 50 | 64.6 | 5 | 10 | 1.1 | 0.063 |
| | 90 | 20 | — | 59.5 | 1.1 | 1.1 | NU 210 EG | NJ | NUP | — | — | — | 69000 | 76500 | 6400 | 7700 | — | 57 | 58 | 62 | 67 | 83 | — | — | 1 | 1 | 0.490 | — | HJ 210 E | 50 | 64.1 | 5 | 9 | 1.1 | 0.059 |
| | 90 | 23 | — | 60.4 | 1.1 | 1.1 | NU 2210 | NJ | NUP | — | — | — | 64000 | 73500 | 6500 | 8000 | — | 57 | 58 | 62 | 67 | 83 | — | — | 1 | 1 | 0.580 | — | HJ 2210 | 50 | 64.6 | 5 | 9.5 | 1.1 | 0.062 |
| | 90 | 23 | — | 59.5 | 1.1 | 1.1 | NU 2210 EG | NJ | NUP | — | — | — | 83500 | 97000 | 6400 | 8000 | — | 57 | 58 | 62 | 67 | 83 | — | — | 1 | 1 | 0.632 | — | HJ 2210 E | 50 | 64.1 | 5 | 9 | 1.1 | 0.059 |
| | 110 | 27 | 95 | 65 | 2 | 2 | NU 310 | NJ | NUP | N | NF | NP | 87000 | 86000 | 5600 | 6700 | 60 | 60 | 63 | 67 | 73 | 100 | 100 | 98 | 2 | 2 | 1.17 | 1.14 | HJ 310 | 50 | 71 | 8 | 14 | 2 | 0.145 |
| | 110 | 27 | — | 65 | 2 | 2 | NU 310 EG | NJ | NUP | — | — | — | 110000 | 113000 | 5400 | 6500 | — | 60 | 63 | 67 | 73 | 100 | — | — | 2 | 2 | 1.17 | — | HJ 310 E | 50 | 71.4 | 8 | 13 | 2 | 0.145 |
| | 110 | 40 | — | 65 | 2 | 2 | NU 2310 | NJ | NUP | — | — | — | 121000 | 131000 | 5400 | 6500 | — | 60 | 63 | 67 | 73 | 100 | — | — | 2 | 2 | 1.69 | — | HJ 2310 | 50 | 71 | 8 | 17 | 2 | 0.159 |
| | 110 | 40 | — | 65 | 2 | 2 | NU 2310 E | NJ | NUP | — | — | — | 163000 | 187000 | 5400 | 6500 | — | 60 | 63 | 67 | 73 | 100 | — | — | 2 | 2 | 1.85 | — | HJ 2310 E | 50 | 71.4 | 8 | 14.5 | 2 | 0.152 |
| | 130 | 31 | 110.8 | 70.8 | 2.1 | 2.1 | NU 410 | NJ | NUP | N | NF | NP | 138000 | 136000 | 5000 | 6000 | 62 | 62 | 69 | 73 | 81 | 118 | 118 | 112 | 2 | 2 | 2.05 | 2.01 | HJ 410 | 50 | 78.8 | 9 | 14.5 | 2.1 | 0.230 |
| 55 | 90 | 18 | 80.5 | 64.5 | 1.1 | 1 | NU 1011 | — | — | N | — | — | 37500 | 44000 | 7500 | 9000 | 61.5 | 61 | 63 | 66 | — | 83 | 85 | 81.5 | 1 | 1 | 0.449 | 0.445 | — | — | — | — | — | — | — |
| | 100 | 21 | 88.5 | 66.5 | 1.5 | 1.1 | NU 211 | NJ | NUP | N | NF | NP | 58000 | 62500 | 6300 | 7500 | 63.5 | 62 | 65 | 68 | 73 | 91.5 | 93 | 91 | 1.5 | 1 | 0.634 | 0.630 | HJ 211 | 55 | 70.8 | 6 | 11 | 1.1 | 0.086 |
| | 100 | 21 | — | 66 | 1.5 | 1.1 | NU 211 EG | NJ | NUP | — | — | — | 86500 | 98500 | 5800 | 7100 | — | 62 | 65 | 68 | 73 | 91.5 | — | — | 1.5 | 1 | 0.670 | — | HJ 211 E | 55 | 70.9 | 6 | 9.5 | 1.1 | 0.083 |
| | 100 | 25 | — | 66.5 | 1.5 | 1.1 | NU 2211 | NJ | NUP | — | — | — | 75500 | 87000 | 6200 | 7400 | — | 62 | 65 | 68 | 73 | 91.5 | — | — | 1.5 | 1 | 0.780 | — | HJ 2211 | 55 | 70.8 | 6 | 11 | 1.1 | 0.086 |
| | 100 | 25 | — | 66 | 1.5 | 1.1 | NU 2211 EG | NJ | NUP | — | — | — | 101000 | 122000 | 5800 | 7100 | — | 62 | 65 | 68 | 73 | 91.5 | — | — | 1.5 | 1 | 0.870 | — | HJ 2211 E | 55 | 70.9 | 6 | 10 | 1.1 | 0.085 |
| | 120 | 29 | 104.5 | 70.5 | 2 | 2 | NU 311 | NJ | NUP | N | NF | NP | 111000 | 111000 | 5000 | 6300 | 65 | 65 | 69 | 72 | 80 | 110 | 110 | 107 | 2 | 2 | 1.43 | 1.40 | HJ 311 | 55 | 77.2 | 9 | 15 | 2 | 0.186 |
| | 120 | 29 | — | 70.5 | 2 | 2 | NU 311 EG | NJ | NUP | — | — | — | 137000 | 143000 | 4800 | 5600 | — | 65 | 69 | 72 | 80 | 110 | — | — | 2 | 2 | 1.50 | — | HJ 311 E | 55 | 77.6 | 9 | 14 | 2 | 0.186 |
| | 120 | 43 | — | 70.5 | 2 | 2 | NU 2311 | NJ | NUP | — | — | — | 148000 | 162000 | 4800 | 5600 | — | 65 | 69 | 72 | 80 | 110 | — | — | 2 | 2 | 2.10 | — | HJ 2311 | 55 | 77.2 | 9 | 18.5 | 2 | 0.206 |
| | 120 | 43 | — | 70.5 | 2 | 2 | NU 2311 E | NJ | NUP | — | — | — | 201000 | 233000 | 4800 | 5600 | — | 65 | 69 | 72 | 80 | 110 | — | — | 2 | 2 | 2.35 | — | HJ 2311 E | 55 | 77.6 | 9 | 15.5 | 2 | 0.195 |
| | 140 | 33 | 117.2 | 77.2 | 2.1 | 2.1 | NU 411 | NJ | NUP | N | NF | NP | 139000 | 138000 | 4800 | 5600 | 67 | 67 | 76 | 79 | 87 | 128 | 128 | 119 | 2 | 2 | 2.54 | 2.51 | HJ 411 | 55 | 85.2 | 10 | 16.5 | 2.1 | 0.292 |
| 60 | 95 | 18 | 85.5 | 69.5 | 1.1 | 1 | NU 1012 | — | — | N | — | — | 40000 | 48500 | 6700 | 8500 | 66.5 | 66 | 68 | 71 | — | 88 | 90 | 86.5 | 1 | 1 | 0.484 | 0.477 | — | — | — | — | — | — | — |
| | 110 | 22 | 97.5 | 73.5 | 1.5 | 1.5 | NU 212 | NJ | NUP | N | NF | NP | 68500 | 75000 | 6000 | 7100 | 68.5 | 68.5 | 71 | 75 | 80 | 101.5 | 101.5 | 100 | 1.5 | 1.5 | 0.835 | 0.820 | HJ 212 | 60 | 78.4 | 6 | 11 | 1.5 | 0.109 |
| | 110 | 22 | — | 72 | 1.5 | 1.5 | NU 212 E | NJ | NUP | — | — | — | 97500 | 107000 | 5300 | 6300 | — | 68.5 | 71 | 75 | 80 | 101.5 | — | — | 1.5 | 1.5 | 0.921 | — | HJ 212 E | 60 | 77.7 | 6 | 10 | 1.5 | 0.104 |
| | 110 | 28 | — | 73.5 | 1.5 | 1.5 | NU 2212 | NJ | NUP | — | — | — | 96000 | 116000 | 5300 | 6300 | — | 68.5 | 71 | 75 | 80 | 101.5 | — | — | 1.5 | 1.5 | 1.07 | — | HJ 2212 | 60 | 78.4 | 6 | 11 | 1.5 | 0.109 |
| | 110 | 28 | — | 72 | 1.5 | 1.5 | NU 2212 E | NJ | NUP | — | — | — | 131000 | 157000 | 5300 | 6300 | — | 68.5 | 71 | 75 | 80 | 101.5 | — | — | 1.5 | 1.5 | 1.23 | — | HJ 2212 E | 60 | 77.7 | 6 | 10 | 1.5 | 0.104 |
| | 130 | 31 | 113 | 77 | 2.1 | 2.1 | NU 312 | NJ | NUP | N | NF | NP | 124000 | 126000 | 4800 | 5600 | 72 | 72 | 75 | 79 | 86 | 118 | 118 | 116 | 2 | 2 | 1.82 | 1.78 | HJ 312 | 60 | 84.2 | 9 | 15.5 | 2.1 | 0.224 |
| | 130 | 31 | — | 77 | 2.1 | 2.1 | NU 312 EG | NJ | NUP | — | — | — | 150000 | 157000 | 4300 | 5000 | — | 72 | 75 | 79 | 86 | 118 | — | — | 2 | 2 | 1.87 | — | HJ 312 E | 60 | 84.5 | 9 | 14.5 | 2.1 | 0.222 |
| | 130 | 46 | — | 77 | 2.1 | 2.1 | NU 2312 | NJ | NUP | — | — | — | 169000 | 188000 | 4300 | 5300 | — | 72 | 75 | 79 | 86 | 118 | — | — | 2 | 2 | 2.69 | — | HJ 2312 | 60 | 84.2 | 9 | 19 | 2.1 | 0.248 |
| | 130 | 46 | — | 77 | 2.1 | 2.1 | NU 2312 E | NJ | NUP | — | — | — | 222000 | 262000 | 4300 | 5300 | — | 72 | 75 | 79 | 86 | 118 | — | — | 2 | 2 | 3.01 | — | HJ 2312 E | 60 | 84.5 | 9 | 16 | 2.1 | 0.232 |
| | 150 | 35 | 127 | 83 | 2.1 | 2.1 | NU 412 | NJ | NUP | N | NF | NP | 167000 | 168000 | 4300 | 5300 | 72 | 72 | 82 | 85 | 94 | 118 | 118 | 128 | 2 | 2 | 3.05 | 3.02 | HJ 412 | 60 | 91.8 | 10 | 16.5 | 2.1 | 0.336 |

Note: (1) The dimension table shows limiting speed for bearings made with machined cages. For bearings made with pressed steel cages, multiply the table limits by 0.8.

# Cylindrical Roller Bearings

Bore Diameter: 65～75mm

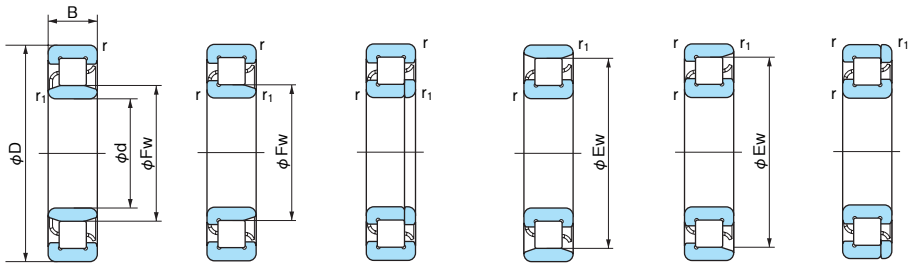


NU NJ NUP N NF NP

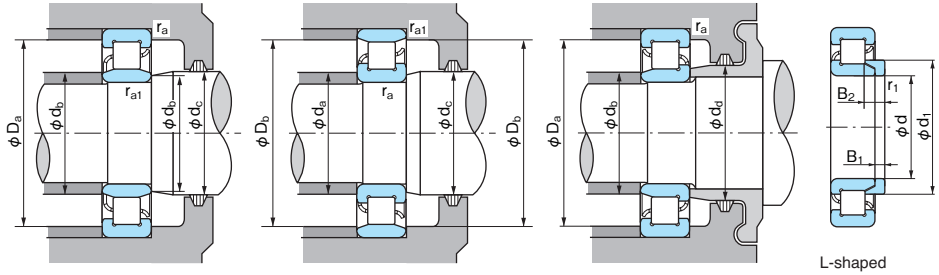


L-shaped thrust collar

1N=0.102kgf

| Boundary dimensions (mm) | | | | | | | Bearing No. | | | | | | Basic dynamic load rating Cr (N) | Basic static load rating Cor (N) | Limiting speed (min⁻¹)(1) | | Abutment and fillet dimensions (mm) | | | | | | | | | | Mass (kg) | | Dimensions of L-shaped thrust collar (mm) | | | | | | |
|---|---|---|---|---|---|---|---|---|---|---|---|---|---|---|---|---|---|---|---|---|---|---|---|---|---|---|---|---|---|---|---|---|---|---|---|
| d | D | B | Ew | Fw | r (min) | r1 (min) | NU | NJ | NUP | N | NF | NP | | | Grease lubrication | Oil lubrication | da (min) | db (min) | db (max) | dc (min) | dd (min) | Da (max) | Db (max) | Db (min) | ra (max) | ra1 (max) | NU | N | Bearing No. | d | d1 (max) | B1 | B2 | r1 (min) | Mass (kg) Reference |
| 65 | 100 | 18 | 90.5 | 74.5 | 1.1 | 1 | NU 1013 | — | — | N | — | — | 41000 | 51000 | 6300 | 8000 | 71.5 | 71 | 73 | 75 | — | 93 | 95 | 91.5 | 1 | 1 | 0.514 | 0.560 | — | — | — | — | — | — | — |
| | 120 | 23 | 105.6 | 79.6 | 1.5 | 1.5 | NU 213 | NJ | NUP | N | NF | NP | 84000 | 94500 | 5300 | 6300 | 73.5 | 73.5 | 77 | 81 | 87 | 111.5 | 111.5 | 108 | 1.5 | 1.5 | 1.06 | 1.04 | HJ 213 | 65 | 84.8 | 6 | 11 | 1.5 | 0.127 |
| | 120 | 23 | — | 78.5 | 1.5 | 1.5 | NU 213 E | NJ | NUP | — | — | — | 108000 | 119000 | 4800 | 5600 | — | 73.5 | 77 | 81 | 87 | 111.5 | — | — | 1.5 | 1.5 | 1.18 | — | HJ 213 E | 65 | 84.5 | 6 | 10 | 1.5 | 0.123 |
| | 120 | 31 | — | 79.6 | 1.5 | 1.5 | NU 2213 | NJ | NUP | — | — | — | 120000 | 149000 | 4800 | 6000 | — | 73.5 | 77 | 81 | 87 | 111.5 | — | — | 1.5 | 1.5 | 1.43 | — | HJ 2213 | 65 | 84.8 | 6 | 11.5 | 1.5 | 0.130 |
| | 120 | 31 | — | 78.5 | 1.5 | 1.5 | NU 2213 E | NJ | NUP | — | — | — | 149000 | 181000 | 4800 | 6000 | — | 73.5 | 77 | 81 | 87 | 111.5 | — | — | 1.5 | 1.5 | 1.65 | — | HJ 2213 E | 65 | 84.5 | 6 | 10.5 | 1.5 | 0.126 |
| | 140 | 33 | 121.5 | 83.5 | 2.1 | 2.1 | NU 313 | NJ | NUP | N | NF | NP | 135000 | 139000 | 4500 | 5300 | 77 | 77 | 81 | 85 | 93 | 128 | 128 | 125 | 2 | 2 | 2.27 | 2.22 | HJ 313 | 65 | 91 | 10 | 17 | 2.1 | 0.286 |
| | 140 | 33 | — | 82.5 | 2.1 | 2.1 | NU 313 E | NJ | NUP | — | — | — | 181000 | 191000 | 4000 | 4800 | — | 77 | 81 | 85 | 93 | 128 | — | — | 2 | 2 | 2.55 | — | HJ 313 E | 65 | 90.6 | 10 | 15.5 | 2.1 | 0.274 |
| | 140 | 48 | — | 83.5 | 2.1 | 2.1 | NU 2313 | NJ | NUP | — | — | — | 188000 | 212000 | 4000 | 4800 | — | 77 | 81 | 85 | 93 | 128 | — | — | 2 | 2 | 3.25 | — | HJ 2313 | 65 | 91 | 10 | 20 | 2.1 | 0.309 |
| | 140 | 48 | — | 82.5 | 2.1 | 2.1 | NU 2313 E | NJ | NUP | — | — | — | 247000 | 287000 | 3800 | 4800 | — | 77 | 81 | 85 | 93 | 128 | — | — | 2 | 2 | 3.56 | — | HJ 2313 E | 65 | 90.6 | 10 | 18 | 2.1 | 0.309 |
| | 160 | 37 | 135.3 | 89.3 | 2.1 | 2.1 | NU 413 | NJ | NUP | N | NF | NP | 195000 | 203000 | 4000 | 4800 | 77 | 77 | 88 | 91 | 100 | 148 | 148 | 137 | 2 | 2 | 3.68 | 3.58 | HJ 413 | 65 | 98.5 | 11 | 18 | 2.1 | 0.417 |
| 70 | 110 | 20 | 100 | 80 | 1.1 | 1 | NU 1014 | — | — | N | — | — | 58500 | 70500 | 6000 | 7100 | 76.5 | 76 | 78 | 82 | — | 103 | 105 | 100.5 | 1 | 1 | 0.712 | 0.702 | — | — | — | — | — | — | — |
| | 125 | 24 | 110.5 | 84.5 | 1.5 | 1.5 | NU 214 | NJ | NUP | N | NF | NP | 83500 | 95000 | 5000 | 6300 | 78.5 | 78.5 | 82 | 86 | 92 | 116.5 | 116.5 | 114 | 1.5 | 1.5 | 1.16 | 1.14 | HJ 214 | 70 | 89.6 | 7 | 12.5 | 1.5 | 0.154 |
| | 125 | 24 | — | 83.5 | 1.5 | 1.5 | NU 214 E | NJ | NUP | — | — | — | 119000 | 137000 | 4600 | 5600 | — | 78.5 | 82 | 86 | 92 | 116.5 | — | — | 1.5 | 1.5 | 1.26 | — | HJ 214 E | 70 | 89.5 | 7 | 11 | 1.5 | 0.149 |
| | 125 | 31 | — | 84.5 | 1.5 | 1.5 | NU 2214 | NJ | NUP | — | — | — | 119000 | 151000 | 4800 | 5600 | — | 78.5 | 82 | 86 | 92 | 116.5 | — | — | 1.5 | 1.5 | 1.52 | — | HJ 2214 | 70 | 89.6 | 7 | 12.5 | 1.5 | 0.154 |
| | 125 | 31 | — | 83.5 | 1.5 | 1.5 | NU 2214 E | NJ | NUP | — | — | — | 156000 | 194000 | 4600 | 5600 | — | 78.5 | 82 | 86 | 92 | 116.5 | — | — | 1.5 | 1.5 | 1.68 | — | HJ 2214 E | 70 | 89.5 | 7 | 11.5 | 1.5 | 0.152 |
| | 150 | 35 | 130 | 90 | 2.1 | 2.1 | NU 314 | NJ | NUP | N | NF | NP | 158000 | 220000 | 4000 | 5000 | 82 | 82 | 87 | 92 | 100 | 138 | 138 | 134 | 2 | 2 | 2.73 | 2.68 | HJ 314 | 70 | 98 | 10 | 17.5 | 2.1 | 0.336 |
| | 150 | 35 | — | 89 | 2.1 | 2.1 | NU 314 E | NJ | NUP | — | — | — | 205000 | 222000 | 3600 | 4300 | — | 82 | 87 | 92 | 100 | 138 | — | — | 2 | 2 | 3.15 | — | HJ 314 E | 70 | 97.5 | 10 | 15.5 | 2.1 | 0.315 |
| | 150 | 51 | — | 90 | 2.1 | 2.1 | NU 2314 | NJ | NUP | — | — | — | 223000 | 262000 | 3800 | 4500 | — | 82 | 87 | 92 | 100 | 138 | — | — | 2 | 2 | 3.97 | — | HJ 2314 | 70 | 98 | 10 | 20.5 | 2.1 | 0.362 |
| | 150 | 51 | — | 89 | 2.1 | 2.1 | NU 2314 E | NJ | NUP | — | — | — | 274000 | 325000 | 3600 | 4500 | — | 82 | 87 | 92 | 100 | 138 | — | — | 2 | 2 | 4.30 | — | HJ 2314 E | 70 | 97.5 | 10 | 18.5 | 2.1 | 0.343 |
| | 180 | 42 | 152 | 100 | 3 | 3 | NU 414 | NJ | NUP | N | NF | NP | 228000 | 236000 | 3600 | 4300 | 84 | 84 | 99 | 102 | 112 | 166 | 166 | 153 | 2.5 | 2.5 | 5.40 | 5.26 | HJ 414 | 70 | 110.5 | 12 | 20 | 3 | 0.607 |
| 75 | 115 | 20 | 105 | 85 | 1.1 | 1 | NU 1015 | — | — | N | — | — | 60000 | 74500 | 5600 | 6700 | 81.5 | 81 | 83 | 87 | — | 108 | 110 | 105.5 | 1 | 1 | 0.745 | 0.735 | — | — | — | — | — | — | — |
| | 130 | 25 | 116.5 | 88.5 | 1.5 | 1.5 | NU 215 | NJ | NUP | N | NF | NP | 96500 | 111000 | 4800 | 6000 | 83.5 | 83.5 | 87 | 90 | 96 | 121.5 | 121.5 | 120 | 1.5 | 1.5 | 1.24 | 1.22 | HJ 215 | 75 | 94 | 7 | 12.5 | 1.5 | 0.161 |
| | 130 | 25 | — | 88.5 | 1.5 | 1.5 | NU 215 E | NJ | NUP | — | — | — | 130000 | 156000 | 4300 | 5300 | — | 83.5 | 87 | 90 | 96 | 121.5 | — | — | 1.5 | 1.5 | 1.38 | — | HJ 215 E | 75 | 94.5 | 7 | 11 | 1.5 | 0.159 |
| | 130 | 31 | — | 88.5 | 1.5 | 1.5 | NU 2215 | NJ | NUP | — | — | — | 130000 | 162000 | 4500 | 5300 | — | 83.5 | 87 | 90 | 96 | 121.5 | — | — | 1.5 | 1.5 | 1.57 | — | HJ 2215 | 75 | 94 | 7 | 12.5 | 1.5 | 0.161 |
| | 130 | 31 | — | 88.5 | 1.5 | 1.5 | NU 2215 E | NJ | NUP | — | — | — | 162000 | 207000 | 4300 | 5300 | — | 83.5 | 87 | 90 | 96 | 121.5 | — | — | 1.5 | 1.5 | 1.80 | — | HJ 2215 E | 75 | 94.5 | 7 | 11.5 | 1.5 | 0.162 |
| | 160 | 37 | 139.5 | 95.5 | 2.1 | 2.1 | NU 315 | NJ | NUP | N | NF | NP | 190000 | 205000 | 3800 | 4800 | 87 | 87 | 93 | 97 | 106 | 148 | 148 | 143 | 2 | 2 | 3.21 | 3.15 | HJ 315 | 75 | 104.2 | 11 | 18.5 | 2.1 | 0.406 |
| | 160 | 37 | — | 95 | 2.1 | 2.1 | NU 315 E | NJ | NUP | — | — | — | 240000 | 263000 | 3400 | 4000 | — | 87 | 93 | 97 | 106 | 148 | — | — | 2 | 2 | 3.70 | — | HJ 315 E | 75 | 104.2 | 11 | 16.5 | 2.1 | 0.389 |
| | 160 | 55 | — | 95.5 | 2.1 | 2.1 | NU 2315 | NJ | NUP | — | — | — | 258000 | 300000 | 3400 | 4300 | — | 87 | 93 | 97 | 106 | 148 | — | — | 2 | 2 | 4.84 | — | HJ 2315 | 75 | 104.2 | 11 | 21.5 | 2.1 | 0.437 |
| | 160 | 55 | — | 95 | 2.1 | 2.1 | NU 2315 E | NJ | NUP | — | — | — | 330000 | 395000 | 3400 | 4300 | — | 87 | 93 | 97 | 106 | 148 | — | — | 2 | 2 | 5.30 | — | HJ 2315 E | 75 | 104.2 | 11 | 19.5 | 2.1 | 0.421 |
| | 190 | 45 | 160.5 | 104.5 | 3 | 3 | NU 415 | NJ | NUP | N | NF | NP | 262000 | 274000 | 3400 | 4000 | 89 | 89 | 103 | 107 | 118 | 176 | 176 | 162 | 2.5 | 2.5 | 6.40 | 6.25 | HJ 415 | 75 | 116 | 13 | 21.5 | 3 | 0.710 |

Note: (1) The dimension table shows limiting speed for bearings made with machined cages. For bearings made with pressed steel cages, multiply the table limits by 0.8.

# Cylindrical Roller Bearings

Bore Diameter: 80～90mm

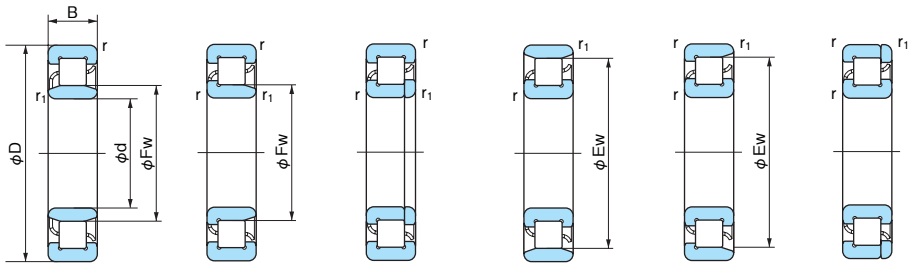


NU NJ NUP N NF NP

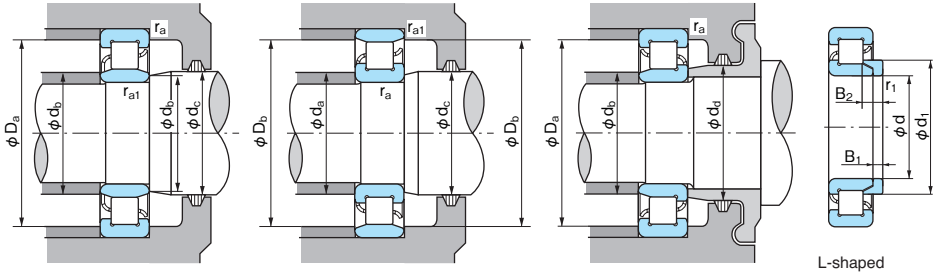


L-shaped thrust collar

1N=0.102kgf

| Boundary dimensions (mm) | | | | | | | Bearing No. | | | | | | Basic dynamic load rating Cr (N) | Basic static load rating Cor (N) | Limiting speed ($min^{-1}$)(1) | | Abutment and fillet dimensions (mm) | | | | | | | | | | Mass (kg) | | Dimensions of L-shaped thrust collar (mm) | | | | | | |
|---|---|---|---|---|---|---|---|---|---|---|---|---|---|---|---|---|---|---|---|---|---|---|---|---|---|---|---|---|---|---|---|---|---|---|---|
| d | D | B | Ew | Fw | r (min) | r1 (min) | NU | NJ | NUP | N | NF | NP | | | Grease lubrication | Oil lubrication | da (min) | db (min) | db (max) | dc (min) | dd (min) | Da (max) | Db (max) | Db (min) | ra (max) | ra1 (max) | NU | N | Bearing No. | d | d1 (max) | B1 | B2 | r1 (min) | Mass (kg) Reference |
| 80 | 125 | 22 | 113.5 | 91.5 | 1.1 | 1 | NU 1016 | — | — | N | — | — | 72500 | 90500 | 5300 | 6300 | 86.5 | 86 | 90 | 94 | — | 118 | 120 | 113.5 | 1 | 1 | 1.03 | 0.994 | — | — | — | — | — | — | — |
| | 140 | 26 | 125.3 | 95.3 | 2 | 2 | NU 216 | NJ | NUP | N | NF | NP | 106000 | 122000 | 4500 | 5300 | 90 | 90 | 94 | 97 | 104 | 130 | 130 | 128 | 2 | 2 | 1.53 | 1.50 | HJ 216 | 80 | 101.2 | 8 | 13.5 | 2 | 0.214 |
| | 140 | 26 | — | 95.3 | 2 | 2 | NU 216 E | NJ | NUP | — | — | — | 139000 | 167000 | 4000 | 4800 | — | 90 | 94 | 97 | 104 | 130 | — | — | 2 | 2 | 1.66 | — | HJ 216 E | 80 | 101.6 | 8 | 12.5 | 2 | 0.213 |
| | 140 | 33 | — | 95.3 | 2 | 2 | NU 2216 | NJ | NUP | — | — | — | 147000 | 186000 | 4000 | 5000 | — | 90 | 94 | 97 | 104 | 130 | — | — | 2 | 2 | 1.96 | — | HJ 2216 | 80 | 101.2 | 8 | 13.5 | 2 | 0.214 |
| | 140 | 33 | — | 95.3 | 2 | 2 | NU 2216 E | NJ | NUP | — | — | — | 186000 | 243000 | 4000 | 5000 | — | 90 | 94 | 97 | 104 | 130 | — | — | 2 | 2 | 2.15 | — | HJ 2216 E | 80 | 101.6 | 8 | 12.5 | 2 | 0.213 |
| | 170 | 39 | 147 | 103 | 2.1 | 2.1 | NU 316 | NJ | NUP | N | NF | NP | 190000 | 207000 | 3600 | 4300 | 92 | 92 | 99 | 105 | 114 | 158 | 158 | 151 | 2 | 2 | 3.93 | 3.83 | HJ 316 | 80 | 111.8 | 11 | 19.5 | 2.1 | 0.479 |
| | 170 | 39 | — | 101 | 2.1 | 2.1 | NU 316 E | NJ | NUP | — | — | — | 256000 | 282000 | 3200 | 3800 | — | 92 | 99 | 105 | 114 | 158 | — | — | 2 | 2 | 4.38 | — | HJ 316 E | 80 | 110.6 | 11 | 17 | 2.1 | 0.440 |
| | 170 | 58 | — | 103 | 2.1 | 2.1 | NU 2316 | NJ | NUP | — | — | — | 274000 | 330000 | 3200 | 4000 | — | 92 | 99 | 105 | 114 | 158 | — | — | 2 | 2 | 5.83 | — | HJ 2316 | 80 | 111.8 | 11 | 23 | 2.1 | 0.517 |
| | 170 | 58 | — | 101 | 2.1 | 2.1 | NU 2316 E | NJ | NUP | — | — | — | 355000 | 430000 | 3200 | 4000 | — | 92 | 99 | 105 | 114 | 158 | — | — | 2 | 2 | 6.35 | — | HJ 2316 E | 80 | 110.6 | 11 | 20 | 2.1 | 0.475 |
| | 200 | 48 | 170 | 110 | 3 | 3 | NU 416 | NJ | NUP | N | NF | NP | 299000 | 315000 | 3200 | 3800 | 94 | 94 | 109 | 112 | 124 | 186 | 186 | 172 | 2.5 | 2.5 | 7.45 | 7.28 | HJ 416 | 80 | 122 | 13 | 22 | 3 | 0.779 |
| 85 | 130 | 22 | 118.5 | 96.5 | 1.1 | 1 | NU 1017 | — | — | N | — | — | 74500 | 95500 | 5000 | 6000 | 91.5 | 91 | 95 | 99 | — | 123 | 125 | 118.5 | 1 | 1 | 1.06 | 1.04 | — | — | — | — | — | — | — |
| | 150 | 28 | 133.8 | 101.8 | 2 | 2 | NU 217 | NJ | NUP | N | NF | NP | 120000 | 140000 | 4300 | 5000 | 95 | 95 | 99 | 104 | 110 | 140 | 140 | 137 | 2 | 2 | 1.92 | 1.87 | HJ 217 | 85 | 108.2 | 8 | 14 | 2 | 0.253 |
| | 150 | 28 | — | 100.5 | 2 | 2 | NU 217 E | NJ | NUP | — | — | — | 167000 | 199000 | 3800 | 4500 | — | 95 | 99 | 104 | 110 | 140 | — | — | 2 | 2 | 2.10 | — | HJ 217 E | 85 | 107.6 | 8 | 12.5 | 2 | 0.239 |
| | 150 | 36 | — | 101.8 | 2 | 2 | NU 2217 | NJ | NUP | — | — | — | 170000 | 218000 | 3800 | 4500 | — | 95 | 99 | 104 | 110 | 140 | — | — | 2 | 2 | 2.50 | — | HJ 2217 | 85 | 108.2 | 8 | 14 | 2 | 0.253 |
| | 150 | 36 | — | 100.5 | 2 | 2 | NU 2217 E | NJ | NUP | — | — | — | 217000 | 279000 | 3800 | 4500 | — | 95 | 99 | 104 | 110 | 140 | — | — | 2 | 2 | 2.75 | — | HJ 2217 E | 85 | 107.6 | 8 | 13 | 2 | 0.243 |
| | 180 | 41 | 156 | 108 | 3 | 3 | NU 317 | NJ | NUP | N | NF | NP | 224000 | 247000 | 3400 | 4000 | 99 | 99 | 106 | 110 | 119 | 166 | 166 | 160 | 2.5 | 2.5 | 4.54 | 4.44 | HJ 317 | 85 | 117.5 | 12 | 20.5 | 3 | 0.560 |
| | 180 | 41 | — | 108 | 3 | 3 | NU 317 E | NJ | NUP | — | — | — | 291000 | 330000 | 3000 | 3600 | — | 99 | 106 | 110 | 119 | 166 | — | — | 2.5 | 2.5 | 5.12 | — | HJ 317 E | 85 | 117.9 | 12 | 18.5 | 3 | 0.545 |
| | 180 | 60 | — | 108 | 3 | 3 | NU 2317 | NJ | NUP | — | — | — | 315000 | 380000 | 3000 | 3800 | — | 99 | 106 | 110 | 119 | 166 | — | — | 2.5 | 2.5 | 6.62 | — | HJ 2317 | 85 | 117.5 | 12 | 24 | 3 | 0.603 |
| | 180 | 60 | — | 108 | 3 | 3 | NU 2317 E | NJ | NUP | — | — | — | 390000 | 485000 | 3000 | 3600 | — | 99 | 106 | 110 | 119 | 166 | — | — | 2.5 | 2.5 | 7.35 | — | HJ 2317 E | 85 | 117.9 | 12 | 22 | 3 | 0.590 |
| | 210 | 52 | 177 | 113 | 4 | 4 | NU 417 | NJ | NUP | N | NF | NP | 330000 | 350000 | 3000 | 3800 | 103 | 103 | 111 | 115 | 128 | 192 | 192 | 179 | 3 | 3 | 9.10 | 8.68 | HJ 417 | 85 | 126 | 14 | 24 | 4 | 0.876 |
| 90 | 140 | 24 | 127 | 103 | 1.5 | 1.1 | NU 1018 | — | — | N | — | — | 88000 | 114000 | 4800 | 5600 | 98 | 97 | 101 | 106 | — | 131.5 | 133.5 | 127.5 | 1.5 | 1 | 1.36 | 1.34 | — | — | — | — | — | 5 | — |
| | 160 | 30 | 143 | 107 | 2 | 2 | NU 218 | NJ | NUP | N | NF | NP | 152000 | 178000 | 4000 | 4800 | 100 | 100 | 105 | 109 | 116 | 150 | 150 | 146 | 2 | 2 | 2.30 | 2.25 | HJ 218 | 90 | 114.2 | 9 | 15 | 2 | 0.311 |
| | 160 | 30 | — | 107 | 2 | 2 | NU 218 E | NJ | NUP | — | — | — | 182000 | 217000 | 3600 | 4300 | — | 100 | 105 | 109 | 116 | 150 | — | — | 2 | 2 | 2.53 | — | HJ 218 E | 90 | 114.4 | 9 | 14 | 2 | 0.306 |
| | 160 | 40 | — | 107 | 2 | 2 | NU 2218 | NJ | NUP | — | — | — | 207000 | 265000 | 3600 | 4300 | — | 100 | 105 | 109 | 116 | 150 | — | — | 2 | 2 | 3.10 | — | HJ 2218 | 90 | 114.2 | 9 | 16 | 2 | 0.320 |
| | 160 | 40 | — | 107 | 2 | 2 | NU 2218 E | NJ | NUP | — | — | — | 242000 | 315000 | 3600 | 4300 | — | 100 | 105 | 109 | 116 | 150 | — | — | 2 | 2 | 3.48 | — | HJ 2218 E | 90 | 114.4 | 9 | 15 | 2 | 0.315 |
| | 190 | 43 | 165 | 115 | 3 | 3 | NU 318 | NJ | NUP | N | NF | NP | 240000 | 265000 | 3200 | 3800 | 104 | 104 | 111 | 117 | 127 | 176 | 176 | 169 | 2.5 | 2.5 | 5.37 | 5.25 | HJ 318 | 90 | 125 | 12 | 21 | 3 | 0.644 |
| | 190 | 43 | — | 113.5 | 3 | 3 | NU 318 E | NJ | NUP | — | — | — | 335000 | 380000 | 2800 | 3400 | — | 104 | 111 | 117 | 127 | 176 | — | — | 2.5 | 2.5 | 5.92 | — | HJ 318 E | 90 | 124.2 | 12 | 18.5 | 3 | 0.601 |
| | 190 | 64 | — | 115 | 3 | 3 | NU 2318 | NJ | NUP | — | — | — | 325000 | 395000 | 2800 | 3600 | — | 104 | 111 | 117 | 127 | 176 | — | — | 2.5 | 2.5 | 7.90 | — | HJ 2318 | 90 | 125 | 12 | 26 | 3 | 0.713 |
| | 190 | 64 | — | 113.5 | 3 | 3 | NU 2318 E | NJ | NUP | — | — | — | 435000 | 535000 | 2800 | 3400 | — | 104 | 111 | 117 | 127 | 176 | — | — | 2.5 | 2.5 | 8.72 | — | HJ 2318 E | 90 | 124.2 | 12 | 22 | 3 | 0.653 |
| | 225 | 54 | 191.5 | 123.5 | 4 | 4 | NU 418 | NJ | NUP | N | NF | NP | 375000 | 400000 | 2800 | 3400 | 108 | 108 | 122 | 125 | 139 | 207 | 207 | 194 | 3 | 3 | 10.6 | 10.3 | HJ 418 | 90 | 137 | 14 | 24 | 4 | 1.06 |

Note: (1) The dimension table shows limiting speed for bearings made with machined cages. For bearings made with pressed steel cages, multiply the table limits by 0.8.

# Cylindrical Roller Bearings

Bore Diameter: 95～110mm

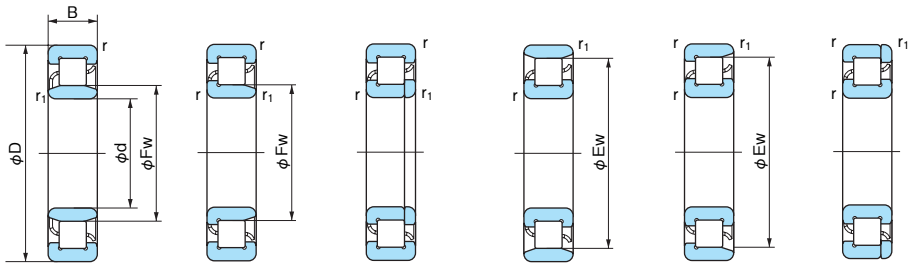


NU NJ NUP N NF NP

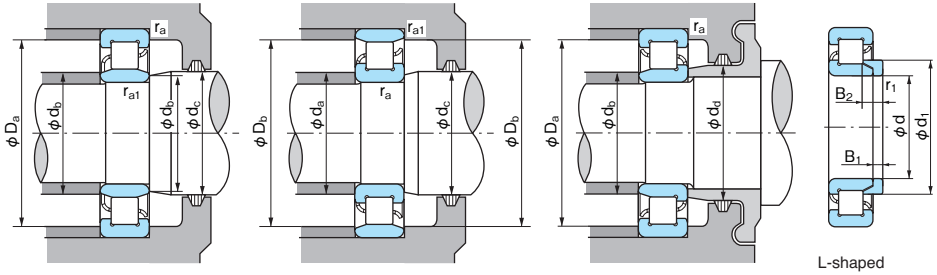


L-shaped thrust collar

1N=0.102kgf

| Boundary dimensions (mm) | | | | | | | Bearing No. | | | | | | Basic dynamic load rating Cr (N) | Basic static load rating Cor (N) | Limiting speed (min⁻¹)(1) | | Abutment and fillet dimensions (mm) | | | | | | | | | | Mass (kg) | | Dimensions of L-shaped thrust collar (mm) | | | | | | |
|---|---|---|---|---|---|---|---|---|---|---|---|---|---|---|---|---|---|---|---|---|---|---|---|---|---|---|---|---|---|---|---|---|---|---|---|
| d | D | B | Ew | Fw | r (min) | r1 (min) | NU | NJ | NUP | N | NF | NP | | | Grease lubrication | Oil lubrication | da (min) | db (min) | db (max) | dc (min) | dd (min) | Da (max) | Db (max) | Db (min) | ra (max) | ra1 (max) | NU | N | Bearing No. | d | d1 (max) | B1 | B2 | r1 (min) | Mass (kg) Reference |
| 95 | 145 | 24 | 132 | 108 | 1.5 | 1.1 | NU 1019 | — | — | N | — | — | 90500 | 120000 | 4500 | 5300 | 103 | 102 | 106 | 111 | — | 136.5 | 138.5 | 132.5 | 1.5 | 1 | 1.42 | 1.40 | — | — | — | — | — | — | — |
| | 170 | 32 | 151.5 | 113.5 | 2.1 | 2.1 | NU 219 | NJ | NUP | N | NF | NP | 165000 | 195000 | 3800 | 4500 | 107 | 107 | 111 | 116 | 123 | 158 | 158 | 155 | 2 | 2 | 2.81 | 2.75 | HJ 219 | 95 | 121 | 9 | 15.5 | 2.1 | 0.357 |
| | 170 | 32 | — | 112.5 | 2.1 | 2.1 | NU 219 E | NJ | NUP | — | — | — | 222000 | 259000 | 3400 | 4000 | — | 107 | 111 | 116 | 123 | 158 | — | — | 2 | 2 | 3.08 | — | HJ 219 E | 95 | 120.6 | 9 | 14 | 2.1 | 0.340 |
| | 170 | 43 | — | 113.5 | 2.1 | 2.1 | NU 2219 | NJ | NUP | — | — | — | 230000 | 298000 | 3400 | 4000 | — | 107 | 111 | 116 | 123 | 158 | — | — | 2 | 2 | 3.85 | — | HJ 2219 | 95 | 121 | 9 | 16.5 | 2.1 | 0.367 |
| | 170 | 43 | — | 112.5 | 2.1 | 2.1 | NU 2219 E | NJ | NUP | — | — | — | 286000 | 370000 | 3400 | 4000 | — | 107 | 111 | 116 | 123 | 158 | — | — | 2 | 2 | 4.23 | — | HJ 2219 E | 95 | 120.6 | 9 | 15.5 | 2.1 | 0.357 |
| | 200 | 45 | 173.5 | 121.5 | 3 | 3 | NU 319 | NJ | NUP | N | NF | NP | 259000 | 289000 | 3000 | 3600 | 109 | 109 | 119 | 124 | 134 | 186 | 186 | 178 | 2.5 | 2.5 | 6.23 | 6.13 | HJ 319 | 95 | 132 | 13 | 22.5 | 3 | 0.774 |
| | 200 | 45 | — | 121.5 | 3 | 3 | NU 319 E | NJ | NUP | — | — | — | 335000 | 385000 | 2600 | 3200 | — | 109 | 119 | 124 | 134 | 186 | — | — | 2.5 | 2.5 | 6.92 | — | HJ 319 E | 95 | 132.2 | 13 | 20.5 | 3 | 0.750 |
| | 200 | 67 | — | 121.5 | 3 | 3 | NU 2319 | NJ | NUP | — | — | — | 370000 | 460000 | 2600 | 3400 | — | 109 | 119 | 124 | 134 | 186 | — | — | 2.5 | 2.5 | 9.39 | — | HJ 2319 | 95 | 132 | 13 | 26.5 | 3 | 0.836 |
| | 200 | 67 | — | 121.5 | 3 | 3 | NU 2319 E | NJ | NUP | — | — | — | 460000 | 585000 | 2600 | 3200 | — | 109 | 119 | 124 | 134 | 186 | — | — | 2.5 | 2.5 | 10.3 | — | HJ 2319 E | 95 | 132.2 | 13 | 20.5 | 3 | 0.750 |
| | 240 | 55 | 201.5 | 133.5 | 4 | 4 | NU 419 | NJ | NUP | N | NF | NP | 400000 | 445000 | 2600 | 3200 | 113 | 113 | 132 | 136 | 149 | 222 | 222 | 204 | 3 | 3 | 14.0 | 13.6 | HJ 419 | 95 | 147 | 15 | 25.5 | 4 | 1.32 |
| 100 | 150 | 24 | 137 | 113 | 1.5 | 1.1 | NU 1020 | — | — | N | — | — | 93000 | 126000 | 4300 | 5300 | 108 | 107 | 111 | 116 | — | 141.5 | 143.5 | 137.5 | 1.5 | 1 | 1.48 | 1.46 | — | — | — | — | — | — | — |
| | 180 | 34 | 160 | 120 | 2.1 | 2.1 | NU 220 | NJ | NUP | N | NF | NP | 183000 | 217000 | 3600 | 4300 | 112 | 112 | 117 | 122 | 130 | 168 | 168 | 164 | 2 | 2 | 3.30 | 3.23 | HJ 220 | 100 | 128 | 10 | 17 | 2.1 | 0.448 |
| | 180 | 34 | — | 119 | 2.1 | 2.1 | NU 220 E | NJ | NUP | — | — | — | 250000 | 305000 | 3200 | 3800 | — | 112 | 117 | 122 | 130 | 168 | — | — | 2 | 2 | 3.73 | — | HJ 220 E | 100 | 127.5 | 10 | 15 | 2.1 | 0.421 |
| | 180 | 46 | — | 120 | 2.1 | 2.1 | NU 2220 | NJ | NUP | — | — | — | 257000 | 335000 | 3200 | 3800 | — | 112 | 117 | 122 | 130 | 168 | — | — | 2 | 2 | 4.67 | — | HJ 2220 | 100 | 128 | 10 | 18 | 2.1 | 0.459 |
| | 180 | 46 | — | 119 | 2.1 | 2.1 | NU 2220 E | NJ | NUP | — | — | — | 335000 | 445000 | 3200 | 3800 | — | 112 | 117 | 122 | 130 | 168 | — | — | 2 | 2 | 5.13 | — | HJ 2220 E | 100 | 127.5 | 10 | 16 | 2.1 | 0.433 |
| | 215 | 47 | 185.5 | 129.5 | 3 | 3 | NU 320 | NJ | NUP | N | NF | NP | 300000 | 335000 | 2800 | 3400 | 114 | 114 | 125 | 132 | 143 | 201 | 201 | 190 | 2.5 | 2.5 | 7.70 | 7.53 | HJ 320 | 100 | 140.5 | 13 | 22.5 | 3 | 0.892 |
| | 215 | 47 | — | 127.5 | 3 | 3 | NU 320 E | NJ | NUP | — | — | — | 380000 | 425000 | 2400 | 3000 | — | 114 | 125 | 132 | 143 | 201 | — | — | 2.5 | 2.5 | 8.45 | — | HJ 320 E | 100 | 139.6 | 13 | 20.5 | 3 | 0.850 |
| | 215 | 73 | — | 129.5 | 3 | 3 | NU 2320 | NJ | NUP | — | — | — | 435000 | 545000 | 2400 | 3200 | — | 114 | 125 | 132 | 143 | 201 | — | — | 2.5 | 2.5 | 11.9 | — | HJ 2320 | 100 | 140.5 | 13 | 27.5 | 3 | 0.977 |
| | 215 | 73 | — | 127.5 | 3 | 3 | NU 2320 E | NJ | NUP | — | — | — | 570000 | 715000 | 2400 | 3000 | — | 114 | 125 | 132 | 143 | 201 | — | — | 2.5 | 2.5 | 12.9 | — | HJ 2320 E | 100 | 139.6 | 13 | 23.5 | 3 | 0.906 |
| | 250 | 58 | 211 | 139 | 4 | 4 | NU 420 | NJ | NUP | N | NF | NP | 450000 | 500000 | 2600 | 3000 | 118 | 118 | 137 | 141 | 156 | 232 | 232 | 213 | 3 | 3 | 14.4 | 14.0 | HJ 420 | 100 | 153.5 | 16 | 27 | 4 | 1.52 |
| 105 | 160 | 26 | 145.5 | 119.5 | 2 | 1.1 | NU 1021 | — | — | N | — | — | 109000 | 149000 | 4000 | 4800 | 114 | 112 | 118 | 122 | — | 150 | 153.5 | 146.5 | 2 | 1 | 1.88 | 1.85 | — | — | — | — | — | — | — |
| | 190 | 36 | 168.8 | 126.8 | 2.1 | 2.1 | NU 221 | NJ | NUP | N | NF | NP | 202000 | 241000 | 3400 | 4000 | 117 | 117 | 124 | 129 | 137 | 178 | 178 | 173 | 2 | 2 | 4.03 | 3.95 | HJ 221 | 105 | 135 | 10 | 17.5 | 2.1 | 0.507 |
| | 225 | 49 | 195 | 135 | 3 | 3 | NU 321 | NJ | NUP | N | NF | NP | 340000 | 385000 | 2600 | 3200 | 119 | 119 | 132 | 137 | 149 | 211 | 211 | 199 | 2.5 | 2.5 | 8.73 | 8.51 | HJ 321 | 105 | 147 | 13 | 22.5 | 3 | 0.977 |
| | 260 | 60 | 220.5 | 144.5 | 4 | 4 | NU 421 | NJ | NUP | N | NF | NP | 495000 | 555000 | 2400 | 3000 | 123 | 123 | 143 | 147 | 162 | 242 | 242 | 223 | 3 | 3 | 19.5 | 19.1 | HJ 421 | 105 | 159.5 | 16 | 27 | 4 | 1.62 |
| 110 | 170 | 28 | 155 | 125 | 2 | 1.1 | NU 1022 | — | — | N | — | — | 131000 | 174000 | 3800 | 4500 | 119 | 117 | 124 | 128 | — | 160 | 163.5 | 156 | 2 | 1 | 2.34 | 2.31 | — | — | — | — | — | — | — |
| | 200 | 38 | 178.5 | 132.5 | 2.1 | 2.1 | NU 222 | NJ | NUP | N | NF | NP | 240000 | 290000 | 3200 | 3800 | 122 | 122 | 130 | 135 | 144 | 188 | 188 | 182 | 2 | 2 | 4.64 | 4.58 | HJ 222 | 110 | 141.5 | 11 | 18.5 | 2.1 | 0.608 |
| | 200 | 38 | — | 132.5 | 2.1 | 2.1 | NU 222 E | NJ | NUP | — | — | — | 293000 | 365000 | 2800 | 3400 | — | 122 | 130 | 135 | 144 | 188 | — | — | 2 | 2 | 5.17 | — | HJ 222 E | 110 | 141.7 | 11 | 17 | 2.1 | 0.593 |
| | 200 | 53 | — | 132.5 | 2.1 | 2.1 | NU 2222 | NJ | NUP | — | — | — | 320000 | 440000 | 2800 | 3400 | — | 122 | 130 | 135 | 144 | 188 | — | — | 2 | 2 | 6.93 | — | HJ 2222 | 110 | 141.5 | 11 | 20.5 | 2.1 | 0.600 |
| | 200 | 53 | — | 132.5 | 2.1 | 2.1 | NU 2222 E | NJ | NUP | — | — | — | 385000 | 515000 | 2800 | 3400 | — | 122 | 130 | 135 | 144 | 188 | — | — | 2 | 2 | 7.32 | — | HJ 2222 E | 110 | 141.7 | 11 | 19.5 | 2.1 | 0.629 |
| | 240 | 50 | 207 | 143 | 3 | 3 | NU 322 | NJ | NUP | N | NF | NP | 380000 | 435000 | 2600 | 3000 | 124 | 124 | 140 | 145 | 158 | 226 | 226 | 211 | 2.5 | 2.5 | 10.4 | 10.2 | HJ 322 | 110 | 155.5 | 14 | 23 | 3 | 1.17 |
| | 240 | 50 | — | 143 | 3 | 3 | NU 322 E | NJ | NUP | — | — | — | 450000 | 525000 | 2200 | 2800 | — | 124 | 140 | 145 | 158 | 226 | — | — | 2.5 | 2.5 | 11.1 | — | HJ 322 E | 110 | 155.8 | 14 | 22 | 3 | 1.16 |
| | 240 | 80 | — | 143 | 3 | 3 | NU 2322 | NJ | NUP | — | — | — | 570000 | 735000 | 2200 | 2800 | — | 124 | 140 | 145 | 158 | 226 | — | — | 2.5 | 2.5 | 18.8 | — | HJ 2322 | 110 | 155.5 | 14 | 28 | 3 | 1.27 |
| | 240 | 80 | — | 143 | 3 | 3 | NU 2322 E | NJ | NUP | — | — | — | 670000 | 880000 | 2200 | 2800 | — | 124 | 140 | 145 | 158 | 226 | — | — | 2.5 | 2.5 | 18.5 | — | HJ 2322 E | 110 | 155.8 | 14 | 26.5 | 3 | 1.26 |
| | 280 | 65 | 235 | 155 | 4 | 4 | NU 422 | NJ | NUP | N | NF | NP | 550000 | 620000 | 2200 | 2800 | 128 | 128 | 153 | 157 | 173 | 262 | 262 | 237 | 3 | 3 | 20.5 | 19.9 | HJ 422 | 110 | 171 | 17 | 29.5 | 4 | 2.05 |

Note: (1) The dimension table shows limiting speed for bearings made with machined cages. For bearings made with pressed steel cages, multiply the table limits by 0.8.

# Cylindrical Roller Bearings

Bore Diameter: 120～140mm

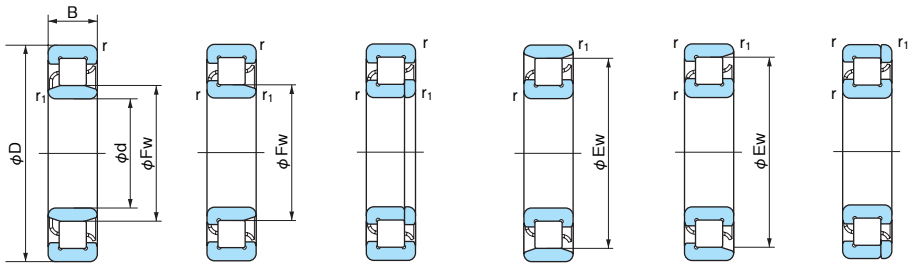


NU NJ NUP N NF NP

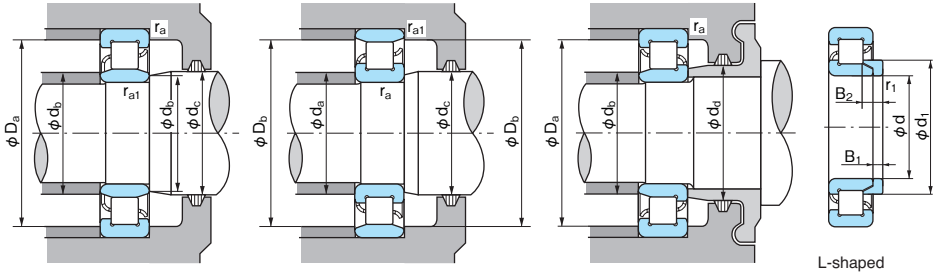


L-shaped thrust collar

1N=0.102kgf

| Boundary dimensions (mm) | | | | | | | Bearing No. | | | | | | Basic dynamic load rating Cr (N) | Basic static load rating Cor (N) | Limiting speed (min⁻¹)(1) | | Abutment and fillet dimensions (mm) | | | | | | | | | | Mass (kg) | | Dimensions of L-shaped thrust collar (mm) | | | | | | |
|---|---|---|---|---|---|---|---|---|---|---|---|---|---|---|---|---|---|---|---|---|---|---|---|---|---|---|---|---|---|---|---|---|---|---|---|
| d | D | B | Ew | Fw | r (min) | r1 (min) | NU | NJ | NUP | N | NF | NP | | | Grease lubrication | Oil lubrication | da (min) | db (min) | db (max) | dc (min) | dd (min) | Da (max) | Db (max) | Db (min) | ra (max) | ra1 (max) | NU | N | Bearing No. | d | d1 (max) | B1 | B2 | r1 (min) | Mass (kg) Reference |
| 120 | 180 | 28 | 165 | 135 | 2 | 1.1 | NU 1024 | — | — | N | — | — | 139000 | 191000 | 3400 | 4300 | 129 | 127 | 134 | 138 | — | 170 | 173.5 | 166 | 2 | 1 | 2.51 | 2.47 | — | — | — | — | — | — | — |
| | 215 | 40 | 191.5 | 143.5 | 2.1 | 2.1 | NU 224 | NJ | NUP | N | NF | NP | 260000 | 320000 | 3000 | 3400 | 132 | 132 | 141 | 146 | 156 | 203 | 203 | 196 | 2 | 2 | 5.61 | 5.50 | HJ 224 | 120 | 153 | 11 | 19 | 2.1 | 0.700 |
| | 215 | 40 | — | 143.5 | 2.1 | 2.1 | NU 224 E | NJ | NUP | — | — | — | 335000 | 420000 | 2600 | 3200 | — | 132 | 141 | 146 | 156 | 203 | — | — | 2 | 2 | 6.25 | — | HJ 224 E | 120 | 153.4 | 11 | 17 | 2.1 | 0.680 |
| | 215 | 58 | — | 143.5 | 2.1 | 2.1 | NU 2224 | NJ | NUP | — | — | — | 365000 | 490000 | 2600 | 3200 | — | 132 | 141 | 146 | 156 | 203 | — | — | 2 | 2 | 8.56 | — | HJ 2224 | 120 | 153 | 11 | 22 | 2.1 | 0.749 |
| | 215 | 58 | — | 143.5 | 2.1 | 2.1 | NU 2224 E | NJ | NUP | — | — | — | 450000 | 620000 | 2600 | 3200 | — | 132 | 141 | 146 | 156 | 203 | — | — | 2 | 2 | 9.35 | — | HJ 2224 E | 120 | 153.4 | 11 | 20 | 2.1 | 0.731 |
| | 260 | 55 | 226 | 154 | 3 | 3 | NU 324 | NJ | NUP | N | NF | NP | 450000 | 510000 | 2200 | 2800 | 134 | 134 | 151 | 156 | 171 | 246 | 246 | 230 | 2.5 | 2.5 | 15.4 | 15.1 | HJ 324 | 120 | 168.5 | 14 | 23.5 | 3 | 1.38 |
| | 260 | 55 | — | 154 | 3 | 3 | NU 324 E | NJ | NUP | — | — | — | 530000 | 610000 | 2000 | 2600 | — | 134 | 151 | 156 | 171 | 246 | — | — | 2.5 | 2.5 | 15.2 | — | HJ 324 E | 120 | 168.6 | 14 | 22.5 | 3 | 1.36 |
| | 260 | 86 | — | 154 | 3 | 3 | NU 2324 | NJ | NUP | — | — | — | 710000 | 920000 | 2000 | 2600 | — | 134 | 151 | 156 | 171 | 246 | — | — | 2.5 | 2.5 | 23.1 | — | HJ 2324 | 120 | 168.5 | 14 | 28 | 3 | 1.51 |
| | 260 | 86 | — | 154 | 3 | 3 | NU 2324 E | NJ | NUP | — | — | — | 795000 | 1030000 | 2000 | 2600 | — | 134 | 151 | 156 | 171 | 246 | — | — | 2.5 | 2.5 | 22.9 | — | HJ 2324 E | 120 | 168.6 | 14 | 26 | 3 | 1.46 |
| | 310 | 72 | 260 | 170 | 5 | 5 | NU 424 | NJ | NUP | N | NF | NP | 675000 | 770000 | 2000 | 2400 | 142 | 142 | 168 | 172 | 190 | 288 | 288 | 262 | 4 | 4 | 28.7 | 28.0 | HJ 424 | 120 | 188 | 17 | 30.5 | 5 | 2.55 |
| 130 | 200 | 33 | 182 | 148 | 2 | 1.1 | NU 1026 | — | — | N | — | — | 172000 | 238000 | 3200 | 3800 | 139 | 137 | 146 | 151 | — | 190 | 193.5 | 183 | 2 | 1 | 3.83 | 3.77 | — | — | — | — | — | — | — |
| | 230 | 40 | 204 | 156 | 3 | 3 | NU 226 | NJ | NUP | N | NF | NP | 270000 | 340000 | 2600 | 3200 | 144 | 144 | 151 | 158 | 168 | 216 | 216 | 208 | 2.5 | 2.5 | 7.60 | 7.39 | HJ 226 | 130 | 165.5 | 11 | 19 | 3 | 0.805 |
| | 230 | 40 | — | 153.5 | 3 | 3 | NU 226 E | NJ | NUP | — | — | — | 365000 | 455000 | 2400 | 2800 | — | 144 | 151 | 158 | 168 | 216 | — | — | 2.5 | 2.5 | 7.50 | — | HJ 226 E | 130 | 164.2 | 11 | 17 | 3 | 0.775 |
| | 230 | 64 | — | 156 | 3 | 3 | NU 2226 | NJ | NUP | — | — | — | 380000 | 530000 | 2400 | 3000 | — | 144 | 151 | 158 | 168 | 216 | — | — | 2.5 | 2.5 | 11.2 | — | HJ 2226 | 130 | 165.5 | 11 | 25 | 3 | 0.911 |
| | 230 | 64 | — | 153.5 | 3 | 3 | NU 2226 E | NJ | NUP | — | — | — | 530000 | 735000 | 2400 | 3000 | — | 144 | 151 | 158 | 168 | 216 | — | — | 2.5 | 2.5 | 12.5 | — | HJ 2226 E | 130 | 164.2 | 11 | 21 | 3 | 0.833 |
| | 280 | 58 | 243 | 167 | 4 | 4 | NU 326 | NJ | NUP | N | NF | NP | 555000 | 665000 | 2200 | 2600 | 148 | 148 | 164 | 169 | 184 | 262 | 262 | 247 | 3 | 3 | 18.2 | 17.8 | HJ 326 | 130 | 182 | 14 | 24 | 4 | 1.61 |
| | 280 | 58 | — | 167 | 4 | 4 | NU 326 E | NJ | NUP | — | — | — | 615000 | 735000 | 1900 | 2400 | — | 148 | 164 | 169 | 184 | 262 | — | — | 3 | 3 | 18.5 | — | HJ 326 E | 130 | 182.3 | 14 | 23 | 4 | 1.59 |
| | 280 | 93 | — | 167 | 4 | 4 | NU 2326 | NJ | NUP | — | — | — | 840000 | 1130000 | 1900 | 2400 | — | 148 | 164 | 169 | 184 | 262 | — | — | 3 | 3 | 29.1 | — | HJ 2326 | 130 | 182 | 14 | 29.5 | 4 | 1.78 |
| | 280 | 93 | — | 167 | 4 | 4 | NU 2326 E | NJ | NUP | — | — | — | 920000 | 1230000 | 1900 | 2400 | — | 148 | 164 | 169 | 184 | 262 | — | — | 3 | 3 | 28.5 | — | HJ 2326 E | 130 | 182.3 | 14 | 28 | 4 | 1.75 |
| | 340 | 78 | 285 | 185 | 5 | 5 | NU 426 | NJ | NUP | N | NF | NP | 825000 | 955000 | 1800 | 2200 | 152 | 152 | 183 | 187 | 208 | 318 | 318 | 287 | 4 | 4 | 36.9 | 36.1 | HJ 426 | 130 | 205 | 18 | 32 | 5 | 3.23 |
| 140 | 210 | 33 | 192 | 158 | 2 | 1.1 | NU 1028 | — | — | N | — | — | 176000 | 250000 | 3000 | 3600 | 149 | 147 | 156 | 161 | — | 200 | 203.5 | 193 | 2 | 1 | 4.07 | 4.00 | — | — | — | — | — | — | — |
| | 250 | 42 | 221 | 169 | 3 | 3 | NU 228 | NJ | NUP | N | NF | NP | 310000 | 420000 | 2400 | 3000 | 154 | 154 | 166 | 171 | 182 | 236 | 236 | 228 | 2.5 | 2.5 | 9.49 | 9.26 | HJ 228 | 140 | 179.5 | 11 | 19 | 3 | 0.968 |
| | 250 | 42 | — | 169 | 3 | 3 | NU 228 E | NJ | NUP | — | — | — | 395000 | 515000 | 2200 | 2600 | — | 154 | 166 | 171 | 182 | 236 | — | — | 2.5 | 2.5 | 8.90 | — | HJ 228 E | 140 | 180 | 11 | 18 | 3 | 0.966 |
| | 250 | 68 | — | 169 | 3 | 3 | NU 2228 | NJ | NUP | — | — | — | 465000 | 670000 | 2200 | 2800 | — | 154 | 166 | 171 | 182 | 236 | — | — | 2.5 | 2.5 | 14.3 | — | HJ 2228 | 140 | 179.5 | 11 | 25 | 3 | 1.09 |
| | 250 | 68 | — | 169 | 3 | 3 | NU 2228 E | NJ | NUP | — | — | — | 570000 | 835000 | 2200 | 2600 | — | 154 | 166 | 171 | 182 | 236 | — | — | 2.5 | 2.5 | 14.9 | — | HJ 2228 E | 140 | 180 | 11 | 23 | 3 | 1.08 |
| | 300 | 62 | 260 | 180 | 4 | 4 | NU 328 | NJ | NUP | N | NF | NP | 595000 | 745000 | 2000 | 2400 | 158 | 158 | 176 | 182 | 198 | 282 | 282 | 268 | 3 | 3 | 22.4 | 21.8 | HJ 328 | 140 | 196 | 15 | 26 | 4 | 2.01 |
| | 300 | 62 | — | 180 | 4 | 4 | NU 328 E | NJ | NUP | — | — | — | 665000 | 795000 | 1800 | 2200 | — | 158 | 176 | 182 | 198 | 282 | — | — | 3 | 3 | 21.8 | — | HJ 328 E | 140 | 196 | 15 | 25 | 4 | 1.97 |
| | 300 | 102 | — | 180 | 4 | 4 | NU 2328 | NJ | NUP | — | — | — | 920000 | 1250000 | 1800 | 2200 | — | 158 | 176 | 182 | 198 | 282 | — | — | 3 | 3 | 36.8 | — | HJ 2328 | 140 | 196 | 15 | 33.5 | 4 | 2.27 |
| | 300 | 102 | — | 180 | 4 | 4 | NU 2328 E | NJ | NUP | — | — | — | 1020000 | 1380000 | 1800 | 2200 | — | 158 | 176 | 182 | 198 | 282 | — | — | 3 | 3 | 35.9 | — | HJ 2328 E | 140 | 196 | 15 | 31 | 4 | 2.18 |
| | 360 | 82 | 302 | 198 | 5 | 5 | NU 428 | NJ | NUP | N | NF | NP | 875000 | 1020000 | 1700 | 2000 | 162 | 162 | 195 | 200 | 222 | 338 | 338 | 304 | 4 | 4 | 48.0 | 46.8 | HJ 428 | 140 | 219 | 18 | 33 | 5 | 3.70 |

Note: (1) The dimension table shows limiting speed for bearings made with machined cages. For bearings made with pressed steel cages, multiply the table limits by 0.8.

# Cylindrical Roller Bearings

Bore Diameter: 150～180mm

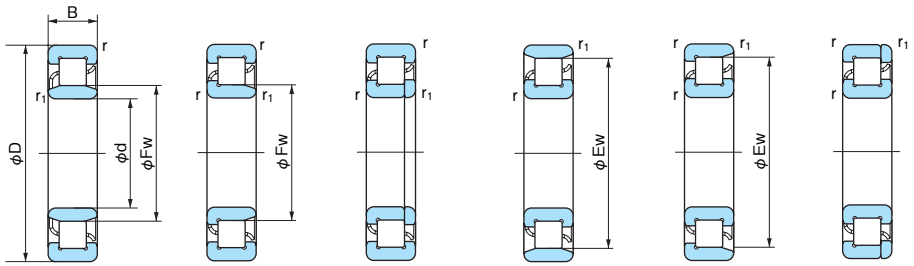


NU NJ NUP N NF NP

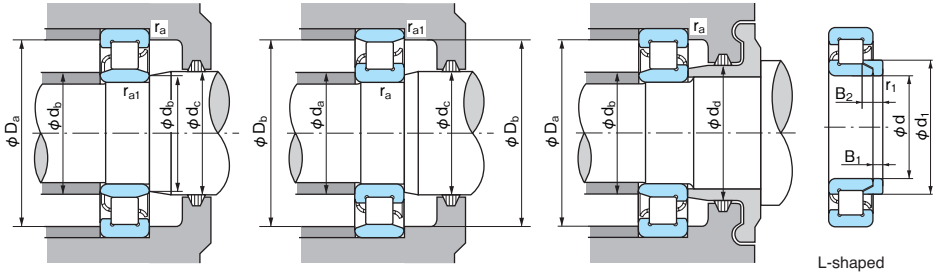


L-shaped thrust collar

1N=0.102kgf

| Boundary dimensions (mm) | | | | | | | Bearing No. | | | | | | Basic dynamic load rating Cr (N) | Basic static load rating Cor (N) | Limiting speed (min⁻¹)(1) | | Abutment and fillet dimensions (mm) | | | | | | | | | | Mass (kg) | | Dimensions of L-shaped thrust collar (mm) | | | | | | |
|---|---|---|---|---|---|---|---|---|---|---|---|---|---|---|---|---|---|---|---|---|---|---|---|---|---|---|---|---|---|---|---|---|---|---|---|
| d | D | B | Ew | Fw | r (min) | r1 (min) | NU | NJ | NUP | N | NF | NP | | | Grease lubrication | Oil lubrication | da (min) | db (min) | db (max) | dc (min) | dd (min) | Da (max) | Db (max) | Db (min) | ra (max) | ra1 (max) | NU | N | Bearing No. | d | d1 (max) | B1 | B2 | r1 (min) | Mass (kg) Reference |
| 150 | 225 | 35 | 205.5 | 169.5 | 2.1 | 1.5 | NU 1030 | — | — | N | — | — | 202000 | 294000 | 2800 | 3400 | 161 | 158.5 | 167 | 173 | — | 213 | 217 | 207 | 2 | 1.5 | 4.90 | 4.83 | — | — | — | — | — | — | — |
| | 270 | 45 | 238 | 182 | 3 | 3 | NU 230 | NJ | NUP | N | NF | NP | 375000 | 490000 | 2200 | 2800 | 164 | 164 | 179 | 184 | 196 | 256 | 256 | 245 | 2.5 | 2.5 | 11.9 | 11.7 | HJ 230 | 150 | 193 | 12 | 20.5 | 3 | 1.22 |
| | 270 | 45 | — | 182 | 3 | 3 | NU 230 E | NJ | NUP | — | — | — | 450000 | 595000 | 2000 | 2400 | — | 164 | 179 | 184 | 196 | 256 | — | — | 2.5 | 2.5 | 11.5 | — | HJ 230 E | 150 | 193.7 | 12 | 19.5 | 3 | 1.23 |
| | 270 | 73 | — | 182 | 3 | 3 | NU 2230 | NJ | NUP | — | — | — | 545000 | 800000 | 2000 | 2600 | — | 164 | 179 | 184 | 196 | 256 | — | — | 2.5 | 2.5 | 18.7 | — | HJ 2230 | 150 | 193 | 12 | 26.5 | 3 | 1.36 |
| | 270 | 73 | — | 182 | 3 | 3 | NU 2230 E | NJ | NUP | — | — | — | 660000 | 990000 | 2000 | 2400 | — | 164 | 179 | 184 | 196 | 256 | — | — | 2.5 | 2.5 | 18.5 | — | HJ 2230 E | 150 | 193.7 | 12 | 24.5 | 3 | 1.35 |
| | 320 | 65 | 277 | 193 | 4 | 4 | NU 330 | NJ | NUP | N | NF | NP | 660000 | 805000 | 1800 | 2200 | 168 | 168 | 190 | 195 | 213 | 302 | 302 | 287 | 3 | 3 | 26.5 | 25.9 | HJ 330 | 150 | 210 | 15 | 26.5 | 4 | 2.32 |
| | 320 | 65 | — | 193 | 4 | 4 | NU 330 E | NJ | NUP | — | — | — | 755000 | 920000 | 1600 | 2000 | — | 168 | 190 | 195 | 213 | 302 | — | — | 3 | 3 | 28.8 | — | HJ 330 E | 150 | 210 | 15 | 25 | 4 | 2.26 |
| | 320 | 108 | — | 193 | 4 | 4 | NU 2330 | NJ | NUP | — | — | — | 1020000 | 1400000 | 1700 | 2000 | — | 168 | 190 | 195 | 213 | 302 | — | — | 3 | 3 | 44.7 | — | HJ 2330 | 150 | 210 | 15 | 34 | 4 | 2.62 |
| | 320 | 108 | — | 193 | 4 | 4 | NU 2330 E | NJ | NUP | — | — | — | 1160000 | 1600000 | 1600 | 2000 | — | 168 | 190 | 195 | 213 | 302 | — | — | 3 | 3 | 48.2 | — | HJ 2330 E | 150 | 210 | 15 | 31.5 | 4 | 2.52 |
| | 380 | 85 | 317 | 213 | 5 | 5 | NU 430 | NJ | NUP | N | NF | NP | 930000 | 1120000 | 1600 | 2000 | 172 | 172 | 210 | 216 | 237 | 358 | 358 | 319 | 4 | 4 | 54.5 | 53.3 | HJ 430 | 150 | 234 | 20 | 36.5 | 5 | 4.61 |
| 160 | 240 | 38 | 220 | 180 | 2.1 | 1.5 | NU 1032 | — | — | N | — | — | 238000 | 340000 | 2600 | 3200 | 171 | 168.5 | 178 | 184 | — | 228 | 232 | 220 | 2 | 1.5 | 6.01 | 5.93 | — | — | — | — | — | — | — |
| | 290 | 48 | 255 | 195 | 3 | 3 | NU 232 | NJ | NUP | N | NF | NP | 430000 | 570000 | 2200 | 2600 | 174 | 174 | 192 | 197 | 210 | 276 | 276 | 262 | 2.5 | 2.5 | 14.5 | 14.2 | HJ 232 | 160 | 207 | 12 | 21 | 3 | 1.44 |
| | 290 | 48 | — | 195 | 3 | 3 | NU 232 E | NJ | NUP | — | — | — | 500000 | 665000 | 1900 | 2200 | — | 174 | 192 | 197 | 210 | 276 | — | — | 2.5 | 2.5 | 15.6 | — | HJ 232 E | 160 | 207.3 | 12 | 20 | 3 | 1.43 |
| | 290 | 80 | — | 195 | 3 | 3 | NU 2232 | NJ | NUP | — | — | — | 630000 | 940000 | 1900 | 2400 | — | 174 | 192 | 197 | 210 | 276 | — | — | 2.5 | 2.5 | 24.1 | — | HJ 2232 | 160 | 205 | 12 | 28 | 3 | 1.50 |
| | 290 | 80 | — | 193 | 3 | 3 | NU 2232 E | NJ | NUP | — | — | — | 810000 | 1190000 | 1900 | 2400 | — | 174 | 192 | 197 | 210 | 276 | — | — | 2.5 | 2.5 | 25.9 | — | HJ 2232 E | 160 | 206.1 | 12 | 24.5 | 3 | 1.54 |
| | 340 | 68 | 292 | 208 | 4 | 4 | NU 332 | NJ | NUP | N | NF | NP | 700000 | 875000 | 1700 | 2000 | 178 | 178 | 200 | 211 | 228 | 322 | 322 | 304 | 3 | 3 | 31.2 | 30.6 | HJ 332 | 160 | 225 | 15 | 28 | 4 | 2.71 |
| | 340 | 68 | — | 204 | 4 | 4 | NU 332 E | NJ | NUP | — | — | — | 860000 | 1050000 | 1700 | 2000 | — | 178 | 200 | 211 | 228 | 322 | — | — | 3 | 3 | 34.1 | — | HJ 332 E | 160 | 222.1 | 15 | 25 | 4 | 2.49 |
| | 340 | 114 | — | 208 | 4 | 4 | NU 2332 | NJ | NUP | — | — | — | 1070000 | 1520000 | 1500 | 1900 | — | 178 | 200 | 211 | 228 | 322 | — | — | 3 | 3 | 52.5 | — | HJ 2332 | 160 | 225 | 15 | 37 | 4 | 3.09 |
| | 340 | 114 | — | 204 | 4 | 4 | NU 2332 E | NJ | NUP | — | — | — | 1310000 | 1820000 | 1600 | 1900 | — | 178 | 200 | 211 | 228 | 322 | — | — | 3 | 3 | 57.2 | — | HJ 2332 E | 160 | 222.1 | 15 | 32 | 4 | 2.80 |
| 170 | 260 | 42 | 237 | 193 | 2.1 | 2.1 | NU 1034 | — | — | N | — | — | 287000 | 415000 | 2400 | 2800 | 181 | 182 | 190 | 197 | — | 248 | 249 | 237 | 2 | 2 | 8.02 | 7.90 | — | — | — | — | — | — | — |
| | 310 | 52 | 272 | 208 | 4 | 4 | NU 234 | NJ | NUP | N | NF | NP | 475000 | 635000 | 2000 | 2400 | 188 | 188 | 204 | 211 | 223 | 292 | 292 | 284 | 3 | 3 | 17.9 | 17.6 | HJ 234 | 170 | 220.5 | 12 | 22 | 4 | 1.67 |
| | 310 | 52 | — | 207 | 4 | 4 | NU 234 E | NJ | NUP | — | — | — | 605000 | 800000 | 1900 | 2300 | — | 188 | 204 | 211 | 223 | 292 | — | — | 3 | 3 | 19.3 | — | HJ 234 E | 170 | 220.8 | 12 | 20 | 4 | 1.64 |
| | 310 | 86 | — | 208 | 4 | 4 | NU 2234 | NJ | NUP | — | — | — | 725000 | 1100000 | 1800 | 2200 | — | 188 | 204 | 211 | 223 | 292 | — | — | 3 | 3 | 29.6 | — | HJ 2234 | 170 | 219 | 12 | 29 | 4 | 1.78 |
| | 310 | 86 | — | 205 | 4 | 4 | NU 2234 E | NJ | NUP | — | — | — | 970000 | 1400000 | 1900 | 2300 | — | 188 | 204 | 211 | 223 | 292 | — | — | 3 | 3 | 31.9 | — | HJ 2234 E | 170 | 219.5 | 12 | 24 | 4 | 1.76 |
| | 360 | 72 | 310 | 220 | 4 | 4 | NU 334 | NJ | NUP | N | NF | NP | 795000 | 1010000 | 1600 | 2000 | 188 | 188 | 216 | 223 | 241 | 342 | 342 | 314 | 3 | 3 | 37.1 | 36.1 | HJ 334 | 170 | 238 | 16 | 29.5 | 4 | 3.20 |
| | 360 | 120 | — | 220 | 4 | 4 | NU 2334 | NJ | NUP | — | — | — | 1220000 | 1750000 | 1400 | 1800 | — | 188 | 216 | 223 | 241 | 342 | — | — | 3 | 3 | 62.7 | — | HJ 2334 | 170 | 238 | 16 | 38.5 | 4 | 3.62 |
| 180 | 280 | 46 | 255 | 205 | 2.1 | 2.1 | NU 1036 | — | — | N | — | — | 355000 | 510000 | 2200 | 2600 | 191 | 192 | 203 | 209 | — | 268 | 269 | 256 | 2 | 2 | 10.8 | 10.5 | — | — | — | — | — | — | — |
| | 320 | 52 | 282 | 218 | 4 | 4 | NU 236 | NJ | NUP | N | NF | NP | 495000 | 675000 | 1900 | 2200 | 198 | 198 | 214 | 221 | 233 | 302 | 302 | 294 | 3 | 3 | 19.3 | 18.3 | HJ 236 | 180 | 230.5 | 12 | 22 | 4 | 1.76 |
| | 320 | 52 | — | 217 | 4 | 4 | NU 236 E | NJ | NUP | — | — | — | 625000 | 850000 | 1800 | 2200 | — | 198 | 214 | 221 | 233 | 302 | — | — | 3 | 3 | 20.5 | — | HJ 236 E | 180 | 230.8 | 12 | 20 | 4 | 1.73 |
| | 320 | 86 | — | 218 | 4 | 4 | NU 2236 | NJ | NUP | — | — | — | 775000 | 1210000 | 1700 | 2000 | — | 198 | 214 | 221 | 233 | 302 | — | — | 3 | 3 | 30.4 | — | HJ 2236 | 180 | 229 | 12 | 29 | 4 | 1.87 |
| | 320 | 86 | — | 215 | 4 | 4 | NU 2236 E | NJ | NUP | — | — | — | 1010000 | 1510000 | 1800 | 2200 | — | 198 | 214 | 221 | 233 | 302 | — | — | 3 | 3 | 34.5 | — | HJ 2236 E | 180 | 229.5 | 12 | 24 | 4 | 1.85 |
| | 380 | 75 | 328 | 232 | 4 | 4 | NU 336 | NJ | NUP | N | NF | NP | 9050000 | 1150000 | 1500 | 1800 | 198 | 198 | 227 | 235 | 255 | 362 | 362 | 332 | 3 | 3 | 42.8 | 41.9 | HJ 336 | 180 | 252 | 17 | 30.5 | 4 | 3.80 |
| | 380 | 126 | — | 232 | 4 | 4 | NU 2336 | NJ | NUP | — | — | — | 1380000 | 1990000 | 1300 | 1700 | — | 198 | 227 | 235 | 255 | 362 | — | — | 3 | 3 | 73.1 | — | HJ 2336 | 180 | 252 | 17 | 40 | 4 | 4.35 |

Note: (1) The dimension table shows limiting speed for bearings made with machined cages. For bearings made with pressed steel cages, multiply the table limits by 0.8.

# Cylindrical Roller Bearings

Bore Diameter: 190～380mm

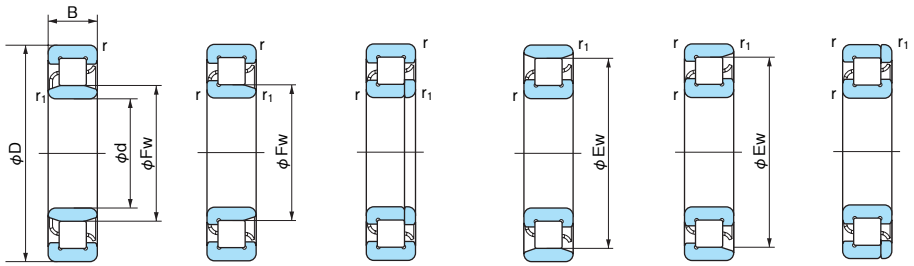


NU NJ NUP N NF NP

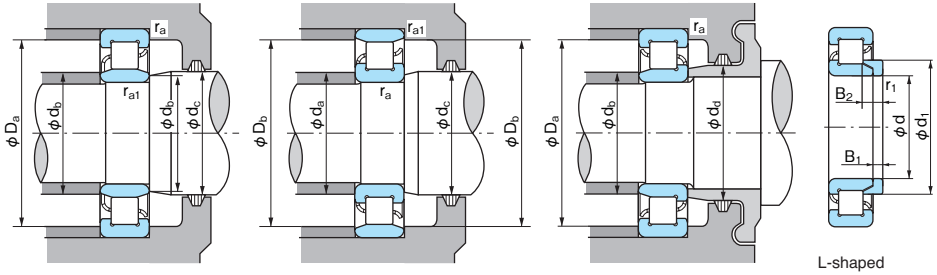


L-shaped thrust collar

1N=0.102kgf

| Boundary dimensions (mm) | | | | | | | Bearing No. | | | | | | Basic dynamic load rating Cr (N) | Basic static load rating Cor (N) | Limiting speed (min⁻¹)(1) | | Abutment and fillet dimensions (mm) | | | | | | | | | | Mass (kg) | | Dimensions of L-shaped thrust collar (mm) | | | | | | |
|---|---|---|---|---|---|---|---|---|---|---|---|---|---|---|---|---|---|---|---|---|---|---|---|---|---|---|---|---|---|---|---|---|---|---|---|
| d | D | B | Ew | Fw | r (min) | r1 (min) | NU | NJ | NUP | N | NF | NP | | | Grease lubrication | Oil lubrication | da (min) | db (min) | db (max) | dc (min) | dd (min) | Da (max) | Db (max) | Db (min) | ra (max) | ra1 (max) | NU | N | Bearing No. | d | d1 (max) | B1 | B2 | r1 (min) | Mass (kg) Reference |
| 190 | 290 | 46 | 265 | 215 | 2.1 | 2.1 | NU 1038 | — | — | N | — | — | 365000 | 535000 | 2000 | 2600 | 201 | 202 | 213 | 219 | — | 278 | 279 | 266 | 2 | 2 | 11.2 | 10.9 | — | — | — | — | — | — | — |
| | 340 | 55 | 299 | 231 | 4 | 4 | NU 238 | NJ | NUP | N | NF | NP | 555000 | 770000 | 1800 | 2200 | 208 | 208 | 227 | 234 | 247 | 322 | 322 | 311 | 3 | 3 | 22.6 | 22.1 | HJ 238 | 190 | 244.5 | 13 | 23.5 | 4 | 2.16 |
| | 340 | 55 | — | 230 | 4 | 4 | NU 238 E | NJ | NUP | — | — | — | 695000 | 955000 | 1700 | 2000 | — | 208 | 227 | 234 | 247 | 322 | — | — | 3 | 3 | 26.0 | — | HJ 238 E | 190 | 244.5 | 13 | 21.5 | 4 | 2.11 |
| | 340 | 92 | — | 231 | 4 | 4 | NU 2238 | NJ | NUP | — | — | — | 830000 | 1290000 | 1600 | 2000 | — | 208 | 227 | 234 | 247 | 322 | — | — | 3 | 3 | 37.5 | — | HJ 2238 | 190 | 243 | 13 | 31.5 | 4 | 2.32 |
| | 340 | 92 | — | 228 | 4 | 4 | NU 2238 E | NJ | NUP | — | — | — | 1100000 | 1670000 | 1700 | 2000 | — | 208 | 227 | 234 | 247 | 322 | — | — | 3 | 3 | 45.2 | — | HJ 2238 E | 190 | 243.2 | 13 | 26.5 | 4 | 2.28 |
| | 400 | 78 | 345 | 245 | 5 | 5 | NU 338 | NJ | NUP | N | NF | NP | 975000 | 1260000 | 1400 | 1700 | 212 | 212 | 240 | 248 | 268 | 378 | 378 | 349 | 4 | 4 | 49.4 | 48.3 | HJ 338 | 190 | 265 | 18 | 32 | 5 | 4.36 |
| | 400 | 132 | — | 245 | 5 | 5 | NU 2338 | NJ | NUP | — | — | — | 1520000 | 2220000 | 1300 | 1600 | — | 212 | 240 | 248 | 268 | 378 | — | — | 4 | 4 | 85.0 | — | HJ 2338 | 190 | 265 | 18 | 41.5 | 5 | 4.92 |
| 200 | 310 | 51 | 281 | 229 | 2.1 | 2.1 | NU 1040 | — | — | N | — | — | 390000 | 580000 | 2000 | 2400 | 211 | 212 | 226 | 233 | — | 298 | 299 | 283 | 2 | 2 | 14.4 | 14.1 | — | — | — | — | — | — | — |
| | 360 | 58 | 316 | 244 | 4 | 4 | NU 240 | NJ | NUP | N | NF | NP | 620000 | 865000 | 1500 | 1800 | 218 | 218 | 240 | 247 | 261 | 342 | 342 | 328 | 3 | 3 | 26.8 | 26.2 | HJ 240 | 200 | 258 | 14 | 25 | 4 | 2.59 |
| | 360 | 58 | — | 243 | 4 | 4 | NU 240 E | NJ | NUP | — | — | — | 765000 | 1060000 | 1600 | 1900 | — | 218 | 240 | 247 | 261 | 342 | — | — | 3 | 3 | 29.5 | — | HJ 240 E | 200 | 258.2 | 14 | 23 | 4 | 2.54 |
| | 360 | 98 | — | 244 | 4 | 4 | NU 2240 | NJ | NUP | — | — | — | 925000 | 1440000 | 1500 | 1800 | — | 218 | 240 | 247 | 261 | 342 | — | — | 3 | 3 | 45.4 | — | HJ 2240 | 200 | 258 | 14 | 34 | 4 | 2.95 |
| | 360 | 98 | — | 241 | 4 | 4 | NU 2240 E | NJ | NUP | — | — | — | 1220000 | 1870000 | 1500 | 1800 | — | 218 | 240 | 247 | 261 | 342 | — | — | 3 | 3 | 52.3 | — | HJ 2240 E | 200 | 256.9 | 14 | 28 | 4 | 2.73 |
| | 420 | 80 | 360 | 260 | 5 | 5 | NU 340 | NJ | NUP | N | NF | NP | 975000 | 1270000 | 1300 | 1600 | 222 | 222 | 254 | 263 | 283 | 398 | 398 | 364 | 4 | 4 | 55.8 | 54.5 | HJ 340 | 200 | 280 | 18 | 33 | 5 | 4.91 |
| | 420 | 138 | — | 260 | 5 | 5 | NU 2340 | NJ | NUP | — | — | — | 1510000 | 2240000 | 1200 | 1500 | — | 222 | 254 | 263 | 283 | 398 | — | — | 4 | 4 | 96.8 | — | HJ 2340 | 200 | 280 | 18 | 44.5 | 5 | 5.63 |
| 220 | 340 | 56 | 310 | 250 | 3 | 3 | NU 1044 | — | — | N | — | — | 500000 | 750000 | 1800 | 2300 | 233 | 234 | 248 | 254 | — | 326 | 327 | 311 | 2.5 | 2.5 | 18.8 | 18.5 | — | — | — | — | — | — | — |
| | 400 | 65 | 350 | 270 | 4 | 4 | NU 244 | NJ | NUP | N | NF | NP | 760000 | 1080000 | 1500 | 1800 | 238 | 238 | 266 | 273 | 289 | 382 | 382 | 362 | 3 | 3 | 37.8 | 37.0 | HJ 244 | 220 | 286 | 15 | 27.5 | 4 | 3.53 |
| | 400 | 108 | — | 270 | 4 | 4 | NU 2244 | NJ | NUP | — | — | — | 1140000 | 1810000 | 1400 | 1700 | — | 238 | 266 | 273 | 289 | 382 | — | — | 3 | 3 | 61.8 | — | HJ 2244 | 220 | 286 | 15 | 36.5 | 4 | 3.99 |
| | 460 | 88 | 396 | 284 | 5 | 5 | NU 344 | NJ | NUP | N | NF | NP | 1200000 | 1570000 | 1200 | 1500 | 242 | 242 | 279 | 287 | 307 | 438 | 438 | 400 | 4 | 4 | 73.6 | 71.7 | HJ 344 | 220 | 307 | 20 | 36 | 5 | 6.53 |
| 240 | 360 | 56 | 330 | 270 | 3 | 3 | NU 1048 | — | — | N | — | — | 530000 | 820000 | 1700 | 2100 | 253 | 254 | 268 | 275 | — | 346 | 347 | 331 | 2.5 | 2.5 | 20.4 | 20.1 | — | — | — | — | — | — | — |
| | 440 | 72 | 385 | 295 | 4 | 4 | NU 248 | NJ | NUP | N | NF | NP | 935000 | 1340000 | 1400 | 1600 | 258 | 258 | 293 | 298 | 316 | 422 | 422 | 397 | 3 | 3 | 51.1 | 50.0 | HJ 248 | 240 | 313 | 16 | 29.5 | 4 | 4.57 |
| | 440 | 120 | — | 295 | 4 | 4 | NU 2248 | NJ | NUP | — | — | — | 1440000 | 2320000 | 1300 | 1600 | — | 258 | 293 | 298 | 316 | 422 | — | — | 3 | 3 | 83.5 | — | HJ 2248 | 240 | 313 | 16 | 38.5 | 4 | 5.14 |
| | 500 | 95 | 430 | 310 | 5 | 5 | NU 348 | NJ | NUP | N | NF | NP | 1430000 | 1950000 | 1100 | 1300 | 262 | 262 | 305 | 313 | 333 | 478 | 478 | 434 | 4 | 4 | 93.0 | 90.9 | HJ 348 | 240 | 335 | 22 | 39.5 | 5 | 8.55 |
| 260 | 400 | 65 | 364 | 296 | 4 | 4 | NU 1052 | — | — | N | — | — | 645000 | 1000000 | 1600 | 1800 | 278 | 278 | 292 | 300 | — | 382 | 382 | 365 | 3 | 3 | 29.6 | 29.2 | — | — | — | — | — | — | — |
| | 480 | 80 | 420 | 320 | 5 | 5 | NU 252 | NJ | NUP | N | NF | NP | 1140000 | 1660000 | 1300 | 1500 | 282 | 282 | 318 | 323 | 343 | 458 | 458 | 432 | 4 | 4 | 69.0 | 66.7 | HJ 252 | 260 | 340 | 18 | 33 | 5 | 6.12 |
| | 480 | 130 | — | 320 | 5 | 5 | NU 2252 | NJ | NUP | — | — | — | 1780000 | 2930000 | 1100 | 1300 | — | 282 | 318 | 323 | 343 | 458 | 458 | — | 4 | 4 | 106 | — | HJ 2252 | 260 | 340 | 18 | 40.5 | 5 | 6.69 |
| | 540 | 102 | 464 | 336 | 6 | 6 | NU 352 | NJ | NUP | N | NF | NP | 1620000 | 2230000 | 1000 | 1200 | 288 | 288 | 331 | 339 | 359 | 512 | 512 | 468 | 5 | 5 | 117 | 114 | HJ 352 | 260 | 362 | 24 | 43 | 6 | 8.77 |
| 280 | 420 | 65 | 384 | 316 | 4 | 4 | NU 1056 | — | — | N | — | — | 660000 | 1050000 | 1500 | 1700 | 298 | 298 | 313 | 320 | — | 402 | 402 | 385 | 3 | 3 | 33.0 | 32.5 | — | — | — | — | — | — | — |
| | 500 | 80 | 440 | 340 | 5 | 5 | NU 256 | NJ | NUP | N | NF | NP | 1140000 | 1680000 | 1200 | 1400 | 302 | 302 | 336 | 343 | 365 | 478 | 478 | 452 | 4 | 4 | 71.5 | 70.0 | HJ 256 | 280 | 360 | 18 | 33 | 5 | 6.52 |
| 300 | 460 | 74 | 420 | 340 | 4 | 4 | NU 1060 | — | — | N | — | — | 885000 | 1400000 | 1400 | 1500 | 318 | 318 | 337 | 344 | — | 442 | 442 | 421 | 3 | 3 | 44.7 | 44.1 | — | — | — | — | — | — | — |
| | 540 | 85 | 476 | 364 | 5 | 5 | NU 260 | NJ | NUP | N | NF | NP | 1400000 | 2070000 | 1100 | 1300 | 322 | 322 | 361 | 368 | 392 | 518 | 518 | 487 | 4 | 4 | 88.9 | 87.0 | HJ 260 | 300 | 387 | 20 | 34.5 | 5 | 8.33 |
| 320 | 480 | 74 | 440 | 360 | 4 | 4 | NU 1064 | — | — | N | — | — | 905000 | 1470000 | 1300 | 1400 | 338 | 338 | 356 | 365 | — | 462 | 462 | 441 | 3 | 3 | 49.3 | 48.4 | — | — | — | — | — | — | — |
| | 580 | 92 | 510 | 390 | 5 | 5 | NU 264 | NJ | NUP | N | NF | NP | 1600000 | 2390000 | 1000 | 1200 | 342 | 342 | 386 | 393 | 419 | 558 | 558 | 522 | 4 | 4 | 113 | 111 | HJ 264 | 320 | 415 | 21 | 37 | 5 | 10.3 |
| 340 | 520 | 82 | 475 | 385 | 5 | 5 | NU 1068 | — | — | N | — | — | 1080000 | 1740000 | 1200 | 1300 | 362 | 362 | 381 | 390 | — | 498 | 498 | 476 | 4 | 4 | 65.9 | 64.8 | — | — | — | — | — | — | — |
| 360 | 540 | 82 | 495 | 405 | 5 | 5 | NU 1072 | — | — | N | — | — | 1110000 | 1830000 | 1100 | 1300 | 382 | 382 | 401 | 410 | — | 518 | 518 | 496 | 4 | 4 | 68.8 | 67.7 | — | — | — | — | — | — | — |
| 380 | 560 | 82 | 515 | 425 | 5 | 5 | NU 1076 | — | — | N | — | — | 1140000 | 1910000 | 1000 | 1200 | 402 | 402 | 421 | 430 | — | 538 | 538 | 516 | 4 | 4 | 72.3 | 71.1 | — | — | — | — | — | — | — |

Note: (1) The dimension table shows limiting speed for bearings made with machined cages. For bearings made with pressed steel cages, multiply the table limits by 0.8.

# Cylindrical Roller Bearings

Bore Diameter: 400～500mm

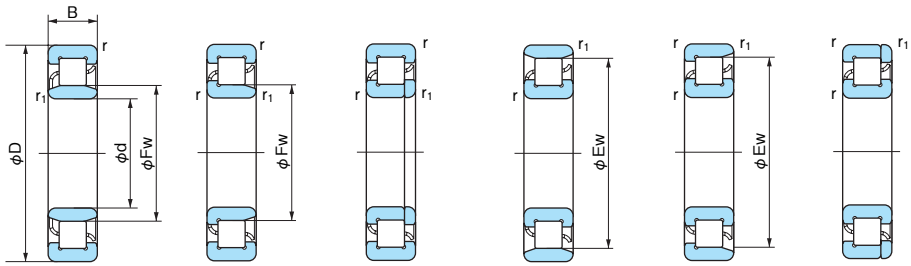


NU NJ NUP N NF NP

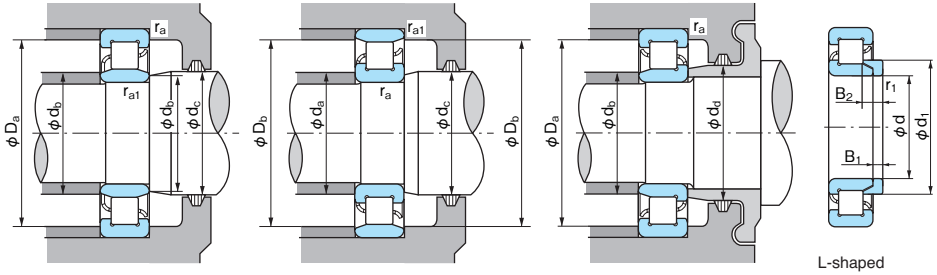


L-shaped thrust collar

1N=0.102kgf

| Boundary dimensions (mm) | | | | | | | Bearing No. | | | | | | Basic dynamic load rating Cr (N) | Basic static load rating Cor (N) | Limiting speed (min⁻¹)(1) | | Abutment and fillet dimensions (mm) | | | | | | | | | | Mass (kg) | | Dimensions of L-shaped thrust collar (mm) | | | | | | |
|---|---|---|---|---|---|---|---|---|---|---|---|---|---|---|---|---|---|---|---|---|---|---|---|---|---|---|---|---|---|---|---|---|---|---|---|
| d | D | B | Ew | Fw | r (min) | r1 (min) | NU | NJ | NUP | N | NF | NP | | | Grease lubrication | Oil lubrication | da (min) | db (min) | db (max) | dc (min) | dd (min) | Da (max) | Db (max) | Db (min) | ra (max) | ra1 (max) | NU | N | Bearing No. | d | d1 (max) | B1 | B2 | r1 (min) | Mass (kg) Reference |
| **400** | 600 | 90 | 550 | 450 | 5 | 5 | **NU 1080** | — | — | **N** | — | — | 1360000 | 2280000 | 950 | 1100 | 422 | 422 | 446 | 455 | — | 578 | 578 | 551 | 4 | 4 | 92.5 | 92.4 | — | — | — | — | — | — | — |
| **420** | 620 | 90 | 570 | 470 | 5 | 5 | **NU 1084** | — | — | **N** | — | — | 1390000 | 2380000 | 900 | 1100 | 442 | 442 | 466 | 475 | — | 598 | 598 | 571 | 4 | 4 | 97.6 | 95.8 | — | — | — | — | — | — | — |
| **440** | 650 | 94 | 597 | 493 | 6 | 6 | **NU 1088** | — | — | **N** | — | — | 1530000 | 2530000 | 850 | 1050 | 468 | 468 | 489 | 498 | — | 622 | 622 | 598 | 5 | 5 | 112 | 110 | — | — | — | — | — | — | — |
| **460** | 680 | 100 | 624 | 516 | 6 | 6 | **NU 1092** | — | — | **N** | — | — | 1630000 | 2740000 | 800 | 1000 | 488 | 488 | 512 | 520 | — | 652 | 652 | 625 | 5 | 5 | 130 | 128 | — | — | — | — | — | — | — |
| **480** | 700 | 100 | 644 | 536 | 6 | 6 | **NU 1096** | — | — | **N** | — | — | 1620000 | 2860000 | 780 | 950 | 508 | 508 | 532 | 541 | — | 672 | 672 | 645 | 5 | 5 | 135 | 132 | — | — | — | — | — | — | — |
| **500** | 720 | 100 | 664 | 556 | 6 | 6 | **NU 10/500** | — | — | **N** | — | — | 1700000 | 2970000 | 750 | 900 | 528 | 528 | 552 | 561 | — | 692 | 692 | 665 | 5 | 5 | 140 | 137 | — | — | — | — | — | — | — |

Note: (1) The dimension table shows limiting speed for bearings made with machined cages. For bearings made with pressed steel cages, multiply the table limits by 0.8.

# Double-row Cylindrical Roller Bearings

Bore Diameter: 25～180mm

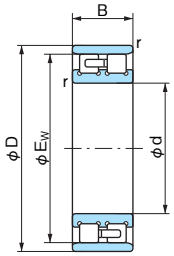


NN
Cylindrical bore

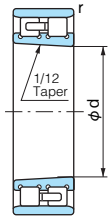


NN
Tapered bore (Taper: 1/12)

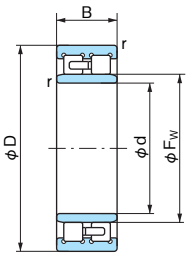


NNU
Cylindrical bore

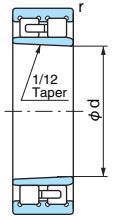


NNU
Tapered bore (Taper: 1/12)

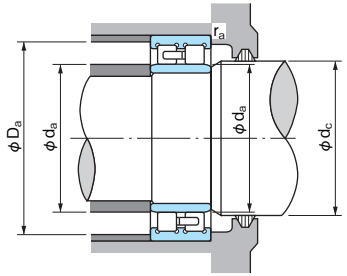


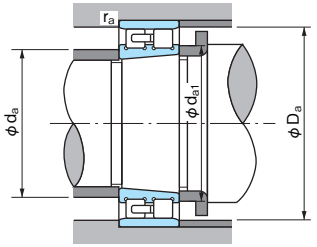


1N=0.102kgf

| Boundary dimensions (mm) | | | | | | Bearing No. | | Basic dynamic load rating Cr (N) | Basic static load rating Cor (N) | Limiting speed (min-1) | | Abutment and fillet dimensions (mm) | | | | | | | Mass (kg) (Reference Tapered bore) | Bearing No. |
|---|---|---|---|---|---|---|---|---|---|---|---|---|---|---|---|---|---|---|---|---|
| d | D | B | Ew | Fw | r (min) | Cylindrical bore | Tapered bore | | | Grease lubrication | Oil lubrication | da (min) | da (max) | da1 (min) | dc (min) | Da (max) | Da (min) | ra (max) | | |
| 25 | 47 | 16 | 41.3 | — | 0.6 | NN3005 | NN3005K | 25800 | 30000 | 15000 | 17000 | 30 | — | 30 | — | 42 | 41.8 | 0.6 | 0.123 | NN3005K |
| 30 | 55 | 19 | 48.5 | — | 1 | NN3006 | NN3006K | 31000 | 37000 | 12000 | 15000 | 36 | — | 37 | — | 49 | 49 | 1 | 0.199 | NN3006K |
| 35 | 62 | 20 | 55 | — | 1 | NN3007 | NN3007K | 39500 | 50000 | 11000 | 13000 | 41 | — | 42 | — | 56 | 56 | 1 | 0.258 | NN3007K |
| 40 | 68 | 21 | 61 | — | 1 | NN3008 | NN3008K | 43500 | 55500 | 9800 | 11000 | 46 | — | 48 | — | 62 | 62 | 1 | 0.312 | NN3008K |
| 45 | 75 | 23 | 67.5 | — | 1 | NN3009 | NN3009K | 52000 | 68500 | 8800 | 10000 | 51 | — | 52 | — | 69 | 69 | 1 | 0.405 | NN3009K |
| 50 | 80 | 23 | 72.5 | — | 1 | NN3010 | NN3010K | 53000 | 72500 | 8200 | 9600 | 56 | — | 58 | — | 74 | 74 | 1 | 0.454 | NN3010K |
| 55 | 90 | 26 | 81 | — | 1.1 | NN3011 | NN3011K | 69500 | 96500 | 7300 | 8600 | 62 | — | 64 | — | 83 | 82 | 1 | 0.651 | NN3011K |
| 60 | 95 | 26 | 86.1 | — | 1.1 | NN3012 | NN3012K | 73500 | 106000 | 6800 | 8000 | 67 | — | 68 | — | 88 | 87 | 1 | 0.704 | NN3012K |
| 65 | 100 | 26 | 91 | — | 1.1 | NN3013 | NN3013K | 77000 | 116000 | 6400 | 7600 | 72 | — | 74 | — | 93 | 92 | 1 | 0.758 | NN3013K |
| 70 | 110 | 30 | 100 | — | 1.1 | NN3014 | NN3014K | 97500 | 148000 | 5700 | 6800 | 77 | — | 78 | — | 103 | 101 | 1 | 1.04 | NN3014K |
| 75 | 115 | 30 | 105 | — | 1.1 | NN3015 | NN3015K | 96500 | 149000 | 5500 | 6400 | 82 | — | 84 | — | 108 | 106 | 1 | 1.14 | NN3015K |
| 80 | 125 | 34 | 113 | — | 1.1 | NN3016 | NN3016K | 119000 | 186000 | 5000 | 6000 | 87 | — | 90 | — | 118 | 114 | 1 | 1.52 | NN3016K |
| 85 | 130 | 34 | 118 | — | 1.1 | NN3017 | NN3017K | 125000 | 201000 | 4800 | 5600 | 92 | — | 96 | — | 123 | 119 | 1 | 1.61 | NN3017K |
| 90 | 140 | 37 | 127 | — | 1.5 | NN3018 | NN3018K | 143000 | 228000 | 4500 | 5200 | 98.5 | — | 100 | — | 131.5 | 129 | 1.5 | 2.07 | NN3018K |
| 95 | 145 | 37 | 132 | — | 1.5 | NN3019 | NN3019K | 150000 | 246000 | 4300 | 5000 | 103.5 | — | 106 | — | 136.5 | 134 | 1.5 | 2.17 | NN3019K |
| 100 | 140 | 40 | — | 113 | 1.1 | NNU4920 | NNU4920K | 155000 | 305000 | 4200 | 5000 | 106.5 | 111 | 110 | 115 | 133.5 | — | 1 | 1.77 | NNU4920K |
| | 150 | 37 | 137 | — | 1.5 | NN3020 | NN3020K | 157000 | 265000 | 4000 | 4800 | 108.5 | — | 112 | — | 141.5 | 139 | 1.5 | 2.26 | NN3020K |
| 105 | 145 | 40 | — | 118 | 1.1 | NNU4921 | NNU4921K | 161000 | 325000 | 4000 | 4800 | 111.5 | 116 | 115 | 120 | 138.5 | — | 1 | 1.85 | NNU4921K |
| | 160 | 41 | 146 | — | 2 | NN3021 | NN3021K | 198000 | 320000 | 3800 | 4500 | 115 | — | 116 | — | 150 | 148 | 2 | 2.89 | NN3021K |
| 110 | 150 | 40 | — | 123 | 1.1 | NNU4922 | NNU4922K | 167000 | 335000 | 3900 | 4600 | 116.5 | 121 | 120 | 125 | 143.5 | — | 1 | 1.93 | NNU4922K |
| | 170 | 45 | 155 | — | 2 | NN3022 | NN3022K | 229000 | 375000 | 3600 | 4300 | 120 | — | 122 | — | 160 | 157 | 2 | 3.68 | NN3022K |
| 120 | 165 | 45 | — | 134.5 | 1.1 | NNU4924 | NNU4924K | 183000 | 360000 | 3500 | 4200 | 126.5 | 133 | 130 | 137 | 158.5 | — | 1 | 2.65 | NNU4924K |
| | 180 | 46 | 165 | — | 2 | NN3024 | NN3024K | 239000 | 405000 | 3300 | 3900 | 130 | — | 132 | — | 170 | 167 | 2 | 3.98 | NN3024K |
| 130 | 180 | 50 | — | 146 | 1.5 | NNU4926 | NNU4926K | 275000 | 565000 | 3200 | 3800 | 138 | 144 | 142 | 148 | 172 | — | 1.5 | 3.55 | NNU4926K |
| | 200 | 52 | 182 | — | 2 | NN3026 | NN3026K | 284000 | 475000 | 3000 | 3600 | 140 | — | 144 | — | 190 | 183 | 2 | 5.92 | NN3026K |
| 140 | 190 | 50 | — | 156 | 1.5 | NNU4928 | NNU4928K | 283000 | 585000 | 3000 | 3600 | 148 | 154 | 151 | 158 | 182 | — | 1.5 | 3.80 | NNU4928K |
| | 210 | 53 | 192 | — | 2 | NN3028 | NN3028K | 298000 | 515000 | 2800 | 3400 | 150 | — | 154 | — | 200 | 194 | 2 | 6.44 | NN3028K |
| 150 | 210 | 60 | — | 168.5 | 2 | NNU4930 | NNU4930K | 350000 | 715000 | 2700 | 3300 | 159 | 166 | 162 | 171 | 201 | — | 2 | 5.95 | NNU4930K |
| | 225 | 56 | 206 | — | 2.1 | NN3030 | NN3030K | 335000 | 585000 | 2600 | 3100 | 162 | — | 164 | — | 213 | 208 | 2 | 7.81 | NN3030K |
| 160 | 220 | 60 | — | 178.5 | 2 | NNU4932 | NNU4932K | 365000 | 760000 | 2600 | 3100 | 169 | 176 | 172 | 182 | 211 | — | 2 | 6.25 | NNU4932K |
| | 240 | 60 | 219 | — | 2.1 | NN3032 | NN3032K | 375000 | 660000 | 2500 | 2900 | 172 | — | 174 | — | 228 | 221 | 2 | 8.92 | NN3032K |
| 170 | 230 | 60 | — | 188.5 | 2 | NNU4934 | NNU4934K | 375000 | 805000 | 2400 | 2900 | 179 | 186 | 182 | 192 | 221 | — | 2 | 6.60 | NNU4934K |
| | 260 | 67 | 236 | — | 2.1 | NN3034 | NN3034K | 450000 | 805000 | 2300 | 2700 | 182 | — | 184 | — | 248 | 238 | 2 | 12.6 | NN3034K |
| 180 | 250 | 69 | — | 202 | 2 | NNU4936 | NNU4936K | 480000 | 1020000 | 2200 | 2700 | 189 | 199 | 194 | 205 | 241 | — | 2 | 9.50 | NNU4936K |
| | 280 | 74 | 255 | — | 2.1 | NN3036 | NN3036K | 565000 | 995000 | 2100 | 2500 | 192 | — | 196 | — | 268 | 257 | 2 | 16.6 | NN3036K |

# Double-row Cylindrical Roller Bearings

Bore Diameter: 190～320mm

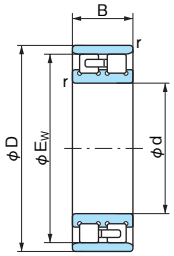


NN
Cylindrical bore

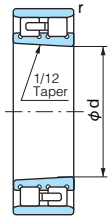


NN
Tapered bore (Taper: 1/12)

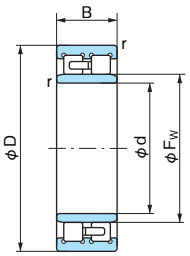


NNU
Cylindrical bore

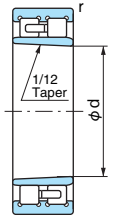


NNU
Tapered bore (Taper: 1/12)

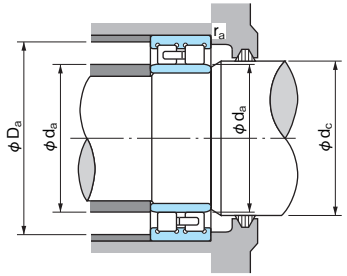


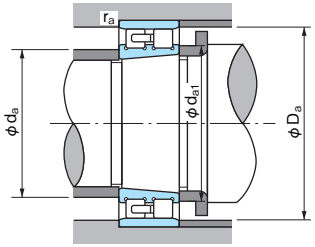


1N=0.102kgf

| Boundary dimensions (mm) | | | | | | Bearing No. | | Basic dynamic load rating Cr (N) | Basic static load rating Cor (N) | Limiting speed (min-1) | | Abutment and fillet dimensions (mm) | | | | | | | Mass (kg) (Reference Tapered bore) | Bearing No. |
|---|---|---|---|---|---|---|---|---|---|---|---|---|---|---|---|---|---|---|---|---|
| d | D | B | Ew | Fw | r (min) | Cylindrical bore | Tapered bore | | | Grease lubrication | Oil lubrication | da (min) | da (max) | da1 (min) | dc (min) | Da (max) | Da (min) | ra (max) | | |
| 190 | 260 | 69 | — | 212 | 2 | NNU4938 | NNU4938K | 485000 | 1060000 | 2100 | 2600 | 199 | 209 | 204 | 215 | 251 | — | 2 | 10.0 | NNU4938K |
| | 290 | 75 | 265 | — | 2.1 | NN3038 | NN3038K | 595000 | 1080000 | 2000 | 2400 | 202 | — | 206 | — | 278 | 267 | 2 | 17.5 | NN3038K |
| 200 | 280 | 80 | — | 225 | 2.1 | NNU4940 | NNU4940K | 570000 | 1220000 | 2000 | 2400 | 211 | 222 | 214 | 228 | 269 | — | 2 | 10.1 | NNU4940K |
| | 310 | 82 | 282 | — | 2.1 | NN3040 | NN3040K | 655000 | 1170000 | 1900 | 2200 | 212 | — | 216 | — | 298 | 285 | 2 | 21.6 | NN3040K |
| 220 | 300 | 80 | — | 245 | 2.1 | NNU4944 | NNU4944K | 600000 | 1330000 | 1800 | 2200 | 231 | 242 | 234 | 248 | 289 | — | 2 | 15.5 | NNU4944K |
| | 340 | 90 | 310 | — | 3 | NN3044 | NN3044K | 815000 | 1480000 | 1700 | 2000 | 234 | — | 238 | — | 326 | 313 | 2.5 | 28.4 | NN3044K |
| 240 | 320 | 80 | — | 265 | 2.1 | NNU4948 | NNU4948K | 625000 | 1450000 | 1700 | 2000 | 251 | 262 | 254 | 269 | 309 | — | 2 | 17.0 | NNU4948K |
| | 360 | 92 | 330 | — | 3 | NN3048 | NN3048K | 855000 | 1600000 | 1600 | 1900 | 254 | — | 256 | — | 346 | 333 | 2.5 | 31.8 | NN3048K |
| 260 | 360 | 100 | — | 292 | 2.1 | NNU4952 | NNU4952K | 935000 | 2100000 | 1500 | 1800 | 271 | 288 | 276 | 296 | 349 | — | 2 | 28.3 | NNU4952K |
| | 400 | 104 | 364 | — | 4 | NN3052 | NN3052K | 1080000 | 2070000 | 1400 | 1700 | 278 | — | 280 | — | 382 | 367 | 3 | 46.0 | NN3052K |
| 280 | 380 | 100 | — | 312 | 2.1 | NNU4956 | NNU4956K | 960000 | 2230000 | 1400 | 1700 | 291 | 308 | 296 | 316 | 369 | — | 2 | 30.3 | NNU4956K |
| | 420 | 106 | 384 | — | 4 | NN3056 | NN3056K | 1080000 | 2080000 | 1300 | 1600 | 298 | — | 300 | — | 402 | 387 | 3 | 49.6 | NN3056K |
| 300 | 420 | 118 | — | 339 | 3 | NNU4960 | NNU4960K | 1230000 | 2880000 | 1300 | 1500 | 313 | 335 | 320 | 343 | 407 | — | 2.5 | 46.7 | NNU4960K |
| | 460 | 118 | 418 | — | 4 | NN3060 | NN3060K | 1430000 | 2740000 | 1200 | 1400 | 318 | — | 325 | — | 442 | 421 | 3 | 68.7 | NN3060K |
| 320 | 440 | 118 | — | 359 | 3 | NNU4964 | NNU4964K | 1270000 | 3050000 | 1200 | 1400 | 333 | 335 | 340 | 363 | 427 | — | 2.5 | 49.6 | NNU4964 |
| | 480 | 121 | 438 | — | 4 | NN3064 | NN3064K | 1430000 | 2750000 | 1200 | 1400 | 338 | — | 345 | — | 462 | 442 | 3 | 74.0 | NN3064K |

# Tapered Roller Bearings

Tolerance / Metric series ····· Page 57
/ Inch series ····· Page 60
Internal clearance / Double-row
Tapered Roller Bearings ····· Page 64

## ● Interchangeability

Bearings designated as E ..... J (E prefix and J suffix) comply with ISO standards in sub-unit dimensions. The cups and cones of these bearings are internationally interchangeable.

α : Contact angle
C : Cup width
E : Cup smallest internal diameter

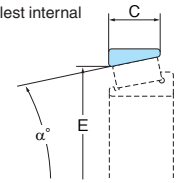


**Fig 1. Sub-unit dimensions**

## ● Combination and Double-row Tapered Roller Bearings

When radial loads act on a Tapered roller bearing, an axial load is generated from the reaction of the internal contact angle of the bearing. This induced axial load creates a separating force on the cup and cone which is normally offset by mounting Tapered roller bearings in pairs or as multi-row sets.
Table 1 shows combination and double-row mounting of Tapered roller bearings.

## ● Inch Series

NACHI manufactures inch-dimensioned series Tapered Roller Bearings to ABMA (ANSI) standards.

**Table 1. Double-row Tapered Roller Bearing Configurations and Features**

| Series or Configuration | Cross section | Example Bearing Number | Adjustment |
|---|---|---|---|
| Back-to-back (DB mounting) | 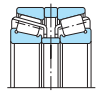 | E32208JDB10 | Combination of two standard single-row Tapered roller bearings. Two mounting systems are used; one using preset spacers, and the other requiring adjustment using either torque or end-play control. |
| Face-to-face (DF mounting) | 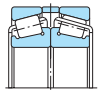 | E32208JDF | |
| KBE KDE | 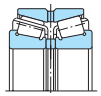 | 150KBE030 | Either double inner or outer ring. Adjustment is normally done using spacers. If spacers are not used, please contact NACHI for end-play specifications. |
| KBD | 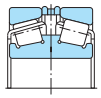 | 150KBD030 | |

# Tapered Roller Bearings

## Metric Series

Bore Diameter: 15～35mm

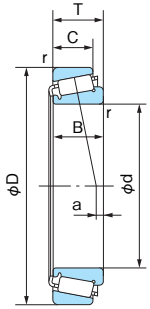


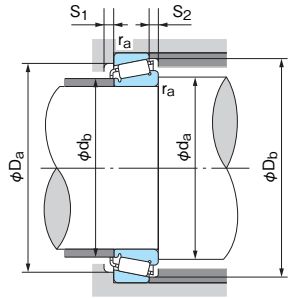


**■Dynamic equivalent radial load**

Pr=XFr+YFa

| $\frac{Fa}{Fr} \leqq e$ | | $\frac{Fa}{Fr} > e$ | |
|---|---|---|---|
| X | Y | X | Y |
| 1 | 0 | 0.4 | $Y_1$ |

Values e and $Y_1$ from table.

**■Static equivalent radial load**

Larger value of following to be used:

Por=0.5Fr+$Y_0$Fa

Por=Fr

Values $Y_0$ from table.

1N=0.102kgf

| Boundary dimensions (mm) | | | | | | | Bearing No. | (Ref.) ISO355 Dimension series | Basic dynamic load rating Cr (N) | Basic static load rating Cor (N) | Limiting speed (min⁻¹) | | Abutment and fillet dimensions (mm) | | | | | | | | Load center (mm) a (1) | Constant e | Axial load factor | | Mass(kg) Reference | Bearing No. |
|---|---|---|---|---|---|---|---|---|---|---|---|---|---|---|---|---|---|---|---|---|---|---|---|---|---|---|
| d | D | T | B | C | Cone r (min) | Cup r (min) | | | | | Grease lubrication | Oil lubrication | da (min) | db (max) | Da (min) | Db (min) | $S_1$ (min) | $S_2$ (min) | Cone ra (max) | Cup ra (max) | | | $Y_1$ | $Y_0$ | | |
| 15 | 35 | 11.75 | 11 | 10 | 0.6 | 0.6 | H-E30202 | — | 15800 | 14500 | 12000 | 16000 | 19.5 | 20 | 29 | 33 | 2 | 1.7 | 0.6 | 0.6 | 3.4 | 0.32 | 1.88 | 1.04 | 0.054 | H-E30202 |
| | 42 | 14.25 | 13 | 11 | 1 | 1 | H-E30302J | 2FB | 21900 | 19200 | 10000 | 14000 | 20.5 | 22 | 36.5 | 38 | 2 | 3 | 1 | 1 | 4.3 | 0.29 | 2.11 | 1.16 | 0.098 | H-E30302J |
| 17 | 40 | 13.25 | 12 | 11 | 1 | 1 | H-E30203J | 2DB | 20800 | 20700 | 10000 | 14000 | 22.5 | 23 | 33 | 37 | 2 | 2 | 1 | 1 | 3.2 | 0.35 | 1.74 | 0.96 | 0.081 | H-E30203J |
| | 47 | 15.25 | 14 | 12 | 1 | 1 | H-E30303J | 2FB | 27400 | 24500 | 9200 | 12000 | 22.5 | 25 | 40 | 42 | 2 | 3 | 1 | 1 | 4.3 | 0.29 | 2.11 | 1.16 | 0.133 | H-E30303J |
| | 47 | 20.25 | 19 | 16 | 1 | 1 | H-32303 | — | 31900 | 29900 | 9400 | 13000 | 22.5 | 25 | 39 | 43 | 2 | 4 | 1 | 1 | 7.9 | 0.29 | 1.97 | 1.08 | 0.176 | H-32303 |
| 20 | 42 | 15 | 15 | 12 | 0.6 | 0.6 | H-E32004J | 3CC | 27300 | 31500 | 9300 | 13000 | 24.5 | 25 | 35 | 39 | 3 | 3 | 0.6 | 0.6 | 4.5 | 0.37 | 1.60 | 0.88 | 0.102 | H-E32004J |
| | 47 | 15.25 | 14 | 12 | 1 | 1 | H-E30204J | 2DB | 27000 | 27200 | 8700 | 12000 | 25.5 | 27 | 39 | 44 | 2 | 3 | 1 | 1 | 3.5 | 0.35 | 1.74 | 0.95 | 0.127 | H-E30204J |
| | 47 | 19.25 | 18 | 15 | 1 | 1 | H-E32204 | — | 32500 | 34800 | 8700 | 12000 | 25.5 | 27 | 39 | 43 | 2 | 4 | 1 | 1 | 6.2 | 0.35 | 1.73 | 0.95 | 0.156 | H-E32204 |
| | 52 | 16.25 | 16 | 13 | 1.5 | 1.5 | H-E30304J | — | 36400 | 35200 | 8300 | 11000 | 28.5 | 28 | 44 | 47 | 2 | 3 | 1.5 | 1.5 | 3.0 | 0.30 | 2.00 | 1.10 | 0.179 | H-E30304J |
| | 52 | 22.25 | 21 | 18 | 1.5 | 1.5 | H-E32304J | 2FD | 45100 | 46700 | 8400 | 11000 | 28.5 | 27 | 43 | 47 | 3 | 4 | 1.5 | 1.5 | 7.8 | 0.30 | 2.00 | 1.10 | 0.239 | H-E32304J |
| 25 | 47 | 15 | 15 | 11.5 | 0.6 | 0.6 | H-E32005J | 4CC | 30200 | 37700 | 8300 | 11000 | 29.5 | 30 | 40 | 44 | 3 | 3.5 | 0.6 | 0.6 | 3.2 | 0.43 | 1.39 | 0.77 | 0.118 | H-E32005J |
| | 47 | 17 | 17 | 14 | 0.6 | 0.6 | H-E33005J | 2CE | 33500 | 42300 | 8300 | 11000 | 29.5 | 30 | 41 | 44 | 3 | 3 | 0.6 | 0.6 | 6.1 | 0.29 | 2.07 | 1.14 | 0.131 | H-E33005J |
| | 52 | 16.25 | 15 | 13 | 1 | 1 | H-E30205J | 3CC | 31500 | 33700 | 7500 | 10000 | 30.5 | 31 | 44 | 48 | 2 | 3 | 1 | 1 | 3.3 | 0.37 | 1.60 | 0.88 | 0.156 | H-E30205J |
| | 52 | 19.25 | 18 | 16 | 1 | 1 | H-E32205J | 2CD | 39800 | 44800 | 7900 | 11000 | 30.5 | 31 | 43 | 48 | 2 | 4 | 1 | 1 | 5.7 | 0.36 | 1.67 | 0.92 | 0.188 | H-E32205J |
| | 52 | 22 | 22 | 18 | 1 | 1 | H-E33205J | 2DE | 48900 | 58500 | 7900 | 10000 | 30.5 | 30 | 43 | 49 | 4 | 4 | 1 | 1 | 7.9 | 0.35 | 1.71 | 0.94 | 0.225 | H-E33205J |
| | 62 | 18.25 | 17 | 15 | 1.5 | 1.5 | H-E30305J | 2FB | 48200 | 46900 | 6800 | 9000 | 33.5 | 34 | 54 | 57 | 2 | 3 | 1.5 | 1.5 | 5.4 | 0.30 | 2.00 | 1.10 | 0.273 | H-E30305J |
| | 62 | 18.25 | 17 | 13 | 1.5 | 1.5 | H-E30305DJ | 7FB | 39800 | 42500 | 5700 | 8000 | 33.5 | 34 | 47 | 58.5 | 3 | 5 | 1.5 | 1.5 | −2.2 | 0.83 | 0.73 | 0.40 | 0.269 | H-E30305DJ |
| | 62 | 25.25 | 24 | 20 | 1.5 | 1.5 | H-E32305J | 2FD | 61200 | 64100 | 6900 | 9100 | 33.5 | 33 | 52 | 57 | 3 | 5 | 1.5 | 1.5 | 8.6 | 0.30 | 2.00 | 1.10 | 0.386 | H-E32305J |
| 30 | 55 | 17 | 17 | 13 | 1 | 1 | H-E32006J | 4CC | 38200 | 48000 | 7000 | 9400 | 35.5 | 35 | 47 | 52 | 3 | 4 | 1 | 1 | 3.4 | 0.43 | 1.39 | 0.77 | 0.177 | H-E32006J |
| | 55 | 20 | 20 | 16 | 1 | 1 | H-E33006J | 2CE | 43200 | 55200 | 7000 | 9400 | 35.5 | 36 | 48 | 52 | 3 | 4 | 1 | 1 | 7.0 | 0.29 | 2.06 | 1.13 | 0.203 | H-E33006J |
| | 62 | 17.25 | 16 | 14 | 1 | 1 | H-E30206J | 3DB | 41500 | 44800 | 6500 | 8700 | 35.5 | 37 | 53 | 57 | 2 | 3 | 1 | 1 | 3.1 | 0.37 | 1.60 | 0.88 | 0.236 | H-E30206J |
| | 62 | 21.25 | 20 | 17 | 1 | 1 | H-E32206J | 3DC | 50700 | 57900 | 6500 | 8700 | 35.5 | 37 | 52 | 58 | 2 | 4 | 1 | 1 | 5.3 | 0.37 | 1.60 | 0.88 | 0.292 | H-E32206J |
| | 62 | 25 | 25 | 19.5 | 1 | 1 | H-E33206J | 2DE | 66400 | 79400 | 6500 | 8700 | 35.5 | 36 | 53 | 58 | 2 | 5.5 | 1 | 1 | 8.7 | 0.34 | 1.76 | 0.97 | 0.359 | H-E33206J |
| | 72 | 20.75 | 19 | 16 | 1.5 | 1.5 | H-E30306J | 2FB | 59600 | 60100 | 5800 | 7700 | 38.5 | 40 | 62 | 66 | 3 | 4.5 | 1.5 | 1.5 | 5.1 | 0.31 | 1.90 | 1.05 | 0.411 | H-E30306J |
| | 72 | 20.75 | 19 | 14 | 1.5 | 1.5 | H-E30306DJ | 7FB | 50900 | 54900 | 4900 | 6800 | 38.5 | 40 | 55 | 68 | 3 | 6.5 | 1.5 | 1.5 | −2.9 | 0.83 | 0.73 | 0.04 | 0.400 | H-E30306DJ |
| | 72 | 28.75 | 27 | 23 | 1.5 | 1.5 | H-E32306J | 2FD | 82200 | 91600 | 5900 | 7900 | 38.5 | 39 | 59 | 66 | 3 | 5.5 | 1.5 | 1.5 | 9.8 | 0.31 | 1.90 | 1.05 | 0.588 | H-E32306J |
| 35 | 55 | 14 | 14 | 11.5 | 0.6 | 0.6 | E32907J | 2BD | 26100 | 36500 | 6600 | 8800 | 39.5 | 40 | 49 | 52 | 2.5 | 2.5 | 0.6 | 0.6 | 3.1 | 0.29 | 2.06 | 1.13 | 0.120 | E32907J |
| | 62 | 18 | 18 | 14 | 1 | 1 | H-E32007J | 4CC | 45500 | 59400 | 6200 | 8200 | 40.5 | 40 | 54 | 59 | 4 | 4 | 1 | 1 | 2.9 | 0.45 | 1.32 | 0.73 | 0.231 | H-E32007J |
| | 62 | 21 | 21 | 17 | 1 | 1 | H-E33007J | 2CE | 51300 | 68000 | 6200 | 8200 | 40.5 | 41 | 55 | 59 | 3 | 4 | 1 | 1 | 6.8 | 0.31 | 1.97 | 1.08 | 0.263 | H-E33007J |
| | 72 | 18.25 | 17 | 15 | 1.5 | 1.5 | H-E30207J | 3DB | 55100 | 60900 | 5600 | 7400 | 43.5 | 44 | 62 | 67 | 3 | 3 | 1.5 | 1.5 | 2.9 | 0.37 | 1.60 | 0.88 | 0.344 | H-E30207J |
| | 72 | 24.25 | 23 | 19 | 1.5 | 1.5 | H-E32207J | 3DC | 69600 | 82400 | 5600 | 7500 | 43.5 | 43 | 61 | 67 | 3 | 5 | 1.5 | 1.5 | 6.0 | 0.37 | 1.60 | 0.88 | 0.453 | H-E32207J |
| | 72 | 28 | 28 | 22 | 1.5 | 1.5 | H-E33207J | 2DE | 86700 | 107000 | 5700 | 7500 | 43.5 | 42 | 61 | 68 | 5 | 6 | 1.5 | 1.5 | 9.6 | 0.35 | 1.70 | 0.93 | 0.551 | H-E33207J |
| | 80 | 22.75 | 21 | 18 | 2 | 1.5 | H-E30307J | 2FB | 76200 | 78900 | 5200 | 6900 | 45 | 45 | 70 | 74 | 3 | 4.5 | 2 | 1.5 | 5.8 | 0.31 | 1.90 | 1.05 | 0.527 | H-E30307J |
| | 80 | 22.75 | 21 | 15 | 2 | 1.5 | H-E30307DJ | 7FB | 63100 | 69100 | 4300 | 6000 | 45 | 44 | 66 | 76.5 | 3 | 7.5 | 2 | 1.5 | −4.1 | 0.83 | 0.73 | 0.40 | 0.536 | H-E30307DJ |
| | 80 | 32.75 | 31 | 25 | 2 | 1.5 | H-E32307J | 2FE | 101000 | 114000 | 5300 | 7000 | 45 | 44 | 66 | 74 | 3 | 7.5 | 2 | 1.5 | 12.2 | 0.31 | 1.90 | 1.05 | 0.776 | H-E32307J |

Note: (1) Minus value of load center "a" indicates that the center is located outside of cone backface.

# Tapered Roller Bearings

## Metric Series

Bore Diameter: 40～50mm

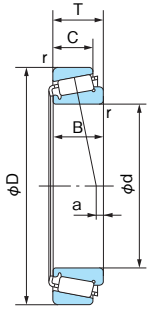


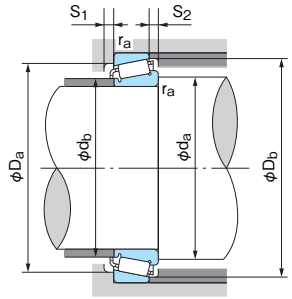


**■Dynamic equivalent radial load**

Pr=XFr+YFa

| $\frac{Fa}{Fr} \leqq e$ | | $\frac{Fa}{Fr} > e$ | |
|---|---|---|---|
| X | Y | X | Y |
| 1 | 0 | 0.4 | $Y_1$ |

Values e and $Y_1$ from table.

**■Static equivalent radial load**

Larger value of following to be used:

$P_{or}=0.5F_r+Y_0F_a$

$P_{or}=F_r$

Values $Y_0$ from table.

1N=0.102kgf

| Boundary dimensions (mm) | | | | | | | Bearing No. | (Ref.) ISO355 Dimension series | Basic dynamic load rating Cr (N) | Basic static load rating Cor (N) | Limiting speed (min⁻¹) | | Abutment and fillet dimensions (mm) | | | | | | | | Load center (mm) | Constant | Axial load factor | | Mass(kg) Reference | Bearing No. |
|---|---|---|---|---|---|---|---|---|---|---|---|---|---|---|---|---|---|---|---|---|---|---|---|---|---|---|
| d | D | T | B | C | Cone r (min) | Cup r (min) | | | | | Grease lubrication | Oil lubrication | da (min) | db (max) | Da (min) | Db (min) | $S_1$ (min) | $S_2$ (min) | Cone ra (max) | Cup ra (max) | a (1) | e | $Y_1$ | $Y_0$ | | |
| 40 | 62 | 15 | 15 | 12 | 0.6 | 0.6 | **H-E32908J** | 2BC | 33500 | 48500 | 5900 | 7800 | 44.5 | 45 | 55 | 59 | 3 | 3 | 0.6 | 0.6 | 3.1 | 0.29 | 2.07 | 1.14 | 0.164 | **H-E32908J** |
| | 68 | 19 | 19 | 14.5 | 1 | 1 | **H-E32008J** | 3CD | 53500 | 71400 | 5600 | 7400 | 45.5 | 46 | 60 | 65 | 4 | 4.5 | 1 | 1 | 3.9 | 0.38 | 1.58 | 0.87 | 0.282 | **H-E32008J** |
| | 68 | 22 | 22 | 18 | 1 | 1 | **H-E33008J** | 2BE | 60400 | 84600 | 5500 | 7400 | 45.5 | 46 | 60 | 65 | 3 | 4 | 1 | 1 | 7.3 | 0.28 | 2.12 | 1.17 | 0.326 | **H-E33008J** |
| | 75 | 26 | 26 | 20.5 | 1.5 | 1.5 | **H-E33108J** | 2CE | 82200 | 108000 | 5200 | 6900 | 48.5 | 47 | 65 | 71 | 4 | 5.5 | 1.5 | 1.5 | 7.7 | 0.36 | 1.69 | 0.93 | 0.508 | **H-E33108J** |
| | 80 | 19.75 | 18 | 16 | 1.5 | 1.5 | **H-E30208J** | 3DB | 62900 | 69200 | 5000 | 6700 | 48.5 | 49 | 69 | 75 | 3 | 3.5 | 1.5 | 1.5 | 2.7 | 0.37 | 1.60 | 0.88 | 0.434 | **H-E30208J** |
| | 80 | 24.75 | 23 | 19 | 1.5 | 1.5 | **H-E32208J** | 3DC | 77700 | 90800 | 5000 | 6600 | 48.5 | 48 | 68 | 75 | 3 | 5.5 | 1.5 | 1.5 | 5.3 | 0.37 | 1.60 | 0.88 | 0.554 | **H-E32208J** |
| | 80 | 32 | 32 | 25 | 1.5 | 1.5 | **H-E33208J** | 2DE | 108000 | 139000 | 5000 | 6700 | 48.5 | 47 | 67 | 76 | 5 | 7 | 1.5 | 1.5 | 11.3 | 0.36 | 1.68 | 0.92 | 0.758 | **H-E33208J** |
| | 90 | 25.25 | 23 | 20 | 2 | 1.5 | **H-E30308J** | 2FB | 90600 | 101000 | 4500 | 6100 | 50 | 52 | 77 | 82 | 3 | 5 | 2 | 1.5 | 5.4 | 0.35 | 1.74 | 0.96 | 0.757 | **H-E30308J** |
| | 90 | 25.25 | 23 | 17 | 2 | 1.5 | **H-E30308DJ** | 7FB | 80500 | 90200 | 3800 | 5300 | 50 | 51 | 71 | 86 | 3 | 8 | 2 | 1.5 | –4.6 | 0.83 | 0.73 | 0.40 | 0.757 | **H-E30308DJ** |
| | 90 | 35.25 | 33 | 27 | 2 | 1.5 | **H-E32308J** | 2FD | 116000 | 139000 | 4600 | 6200 | 50 | 50 | 73 | 82 | 3 | 8 | 2 | 1.5 | 10.9 | 0.35 | 1.74 | 0.96 | 1.06 | **H-E32308J** |
| 45 | 68 | 15 | 15 | 12 | 0.6 | 0.6 | **H-E32909J** | 2BC | 34700 | 52400 | 5300 | 7100 | 49.5 | 50 | 61 | 64 | 3 | 3 | 0.6 | 0.6 | 2.5 | 0.32 | 1.88 | 1.04 | 0.190 | **H-E32909J** |
| | 75 | 20 | 20 | 15.5 | 1 | 1 | **H-E32009J** | 3CC | 62800 | 86500 | 5000 | 6600 | 50.5 | 51 | 67 | 72 | 4 | 4.5 | 1 | 1 | 3.5 | 0.39 | 1.53 | 0.84 | 0.354 | **H-E32009J** |
| | 75 | 24 | 24 | 19 | 1 | 1 | **H-E33009J** | 2CE | 69600 | 101000 | 5000 | 6700 | 50.5 | 51 | 67 | 71 | 4 | 5 | 1 | 1 | 7.6 | 0.29 | 2.04 | 1.12 | 0.416 | **H-E33009J** |
| | 80 | 26 | 26 | 20.5 | 1.5 | 1.5 | **E33109J** | 3CE | 87500 | 120000 | 4800 | 6400 | 53.5 | 52 | 69 | 76.5 | 4 | 5.5 | 1.5 | 1.5 | 6.6 | 0.38 | 1.57 | 0.86 | 0.563 | **E33109J** |
| | 85 | 20.75 | 19 | 16 | 1.5 | 1.5 | **H-E30209J** | 3DB | 67200 | 77400 | 4600 | 6100 | 53.5 | 54 | 74 | 80 | 3 | 4.5 | 1.5 | 1.5 | 1.8 | 0.40 | 1.48 | 0.81 | 0.502 | **H-E30209J** |
| | 85 | 24.75 | 23 | 19 | 1.5 | 1.5 | **H-E32209J** | 3DC | 78300 | 94100 | 4600 | 6100 | 53.5 | 53 | 73 | 81 | 3 | 5.5 | 1.5 | 1.5 | 3.8 | 0.40 | 1.48 | 0.81 | 0.587 | **H-E32209J** |
| | 85 | 32 | 32 | 25 | 1.5 | 1.5 | **E33209J** | 3DE | 112000 | 149000 | 4600 | 6200 | 53.5 | 52 | 76.5 | 81 | 5 | 7 | 1.5 | 1.5 | 10.2 | 0.39 | 1.56 | 0.86 | 0.803 | **E33209J** |
| | 100 | 27.25 | 25 | 22 | 2 | 1.5 | **E30309J** | 2FB | 113000 | 128000 | 4100 | 5400 | 55 | 59 | 86 | 93 | 3 | 5 | 2 | 1.5 | 5.9 | 0.35 | 1.74 | 0.96 | 1.01 | **E30309J** |
| | 100 | 27.25 | 25 | 18 | 2 | 1.5 | **E30309DJ** | 7FB | 95100 | 107000 | 3400 | 4700 | 55 | 56 | 79 | 96 | 3 | 9 | 2 | 1.5 | –5.7 | 0.83 | 0.73 | 0.40 | 0.973 | **E30309DJ** |
| | 100 | 38.25 | 36 | 30 | 2 | 1.5 | **E32309J** | 2FD | 146000 | 180000 | 4100 | 5500 | 55 | 56 | 82 | 93 | 3 | 8 | 2 | 1.5 | 11.4 | 0.35 | 1.74 | 0.96 | 1.43 | **E32309J** |
| 50 | 72 | 15 | 15 | 12 | 0.6 | 0.6 | **E32910J** | 2BC | 35900 | 56300 | 4900 | 6600 | 54.5 | 55 | 65 | 69 | 3 | 3 | 0.6 | 0.6 | 1.3 | 0.34 | 1.76 | 0.97 | 0.195 | **E32910J** |
| | 80 | 20 | 20 | 15.5 | 1 | 1 | **H-E32010J** | 3CC | 65700 | 94500 | 4600 | 6100 | 55.5 | 56 | 72 | 77 | 4 | 4.5 | 1 | 1 | 2.3 | 0.42 | 1.42 | 0.78 | 0.389 | **H-E32010J** |
| | 80 | 24 | 24 | 19 | 1 | 1 | **E33010J** | 2CE | 73000 | 110000 | 4600 | 6100 | 55.5 | 56 | 72 | 76 | 4 | 5 | 1 | 1 | 6.6 | 0.32 | 1.90 | 1.04 | 0.451 | **E33010J** |
| | 85 | 26 | 26 | 20 | 1.5 | 1.5 | **E33110J** | 3CE | 89400 | 127000 | 4400 | 5900 | 58.5 | 56 | 74 | 81.5 | 4 | 6 | 1.5 | 1.5 | 5.4 | 0.41 | 1.46 | 0.80 | 0.594 | **E33110J** |
| | 90 | 21.75 | 20 | 17 | 1.5 | 1.5 | **H-E30210J** | 3DB | 76500 | 91700 | 4300 | 5700 | 58.5 | 58 | 79 | 85 | 3 | 4.5 | 1.5 | 1.5 | 1.65 | 0.42 | 1.43 | 0.79 | 0.566 | **H-E30210J** |
| | 90 | 24.75 | 23 | 19 | 1.5 | 1.5 | **H-E32210J** | 3DC | 85000 | 105000 | 4300 | 5700 | 58.5 | 58 | 78 | 85 | 3 | 5.5 | 1.5 | 1.5 | 4.1 | 0.42 | 1.43 | 0.79 | 0.643 | **H-E32210J** |
| | 90 | 32 | 32 | 24.5 | 1.5 | 1.5 | **H-E33210J** | 3DE | 119000 | 167000 | 4300 | 5700 | 58.5 | 57 | 77 | 86.5 | 5 | 7.5 | 1.5 | 1.5 | 8.9 | 0.41 | 1.45 | 0.80 | 0.887 | **H-E33210J** |
| | 110 | 29.25 | 27 | 23 | 2.5 | 2 | **E30310J** | 2FB | 137000 | 152000 | 3700 | 4900 | 62 | 65 | 95 | 102 | 3 | 6 | 2 | 2 | 6.4 | 0.35 | 1.74 | 0.96 | 1.32 | **E30310J** |
| | 110 | 29.25 | 27 | 19 | 2.5 | 2 | **E30310DJ** | 7FB | 115000 | 133000 | 3100 | 4300 | 62 | 62 | 87 | 105 | 3 | 10 | 2 | 2 | –5.8 | 0.83 | 0.73 | 0.40 | 1.25 | **E30310DJ** |
| | 110 | 42.25 | 40 | 33 | 2.5 | 2 | **E32310J** | 2FD | 176000 | 220000 | 3700 | 5000 | 62 | 62 | 90 | 102 | 3 | 9 | 2 | 2 | 12.9 | 0.35 | 1.74 | 0.96 | 1.89 | **E32310J** |

Note: (1) Minus value of load center "a" indicates that the center is located outside of cone backface.

# Tapered Roller Bearings

## Metric Series

Bore Diameter: 55～65mm

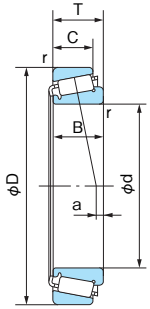


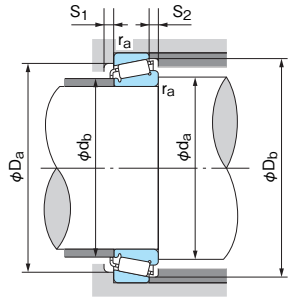


**■Dynamic equivalent radial load**

Pr=XFr+YFa

| $\frac{Fa}{Fr} \leqq e$ | | $\frac{Fa}{Fr} > e$ | |
|---|---|---|---|
| X | Y | X | Y |
| 1 | 0 | 0.4 | $Y_1$ |

Values e and $Y_1$ from table.

**■Static equivalent radial load**

Larger value of following to be used:

Por=0.5Fr+$Y_0$Fa

Por=Fr

Values $Y_0$ from table.

1N=0.102kgf

| Boundary dimensions (mm) | | | | | | | Bearing No. | (Ref.) ISO355 Dimension series | Basic dynamic load rating Cr (N) | Basic static load rating Cor (N) | Limiting speed (min⁻¹) | | Abutment and fillet dimensions (mm) | | | | | | | | Load center (mm) a (1) | Constant e | Axial load factor | | Mass(kg) Reference | Bearing No. |
|---|---|---|---|---|---|---|---|---|---|---|---|---|---|---|---|---|---|---|---|---|---|---|---|---|---|---|
| d | D | T | B | C | Cone r (min) | Cup r (min) | | | | | Grease lubrication | Oil lubrication | da (min) | db (max) | Da (min) | Db (min) | $S_1$ (min) | $S_2$ (min) | Cone ra (max) | Cup ra (max) | | | $Y_1$ | $Y_0$ | | |
| 55 | 80 | 17 | 17 | 14 | 1 | 1 | **E32911J** | 2BC | 44600 | 73300 | 4400 | 5900 | 61 | 61 | 72 | 76 | 3 | 3 | 1 | 1 | 2.5 | 0.31 | 1.94 | 1.07 | 0.285 | **E32911J** |
| | 90 | 23 | 23 | 17.5 | 1.5 | 1.5 | **H-E32011J** | 3CC | 84600 | 121000 | 4100 | 5500 | 63.5 | 63 | 81 | 86 | 4 | 5.5 | 1.5 | 1.5 | 3.2 | 0.41 | 1.48 | 0.81 | 0.569 | **H-E32011J** |
| | 90 | 27 | 27 | 21 | 1.5 | 1.5 | **E33011J** | 2CE | 96500 | 149000 | 4100 | 5400 | 63.5 | 63 | 81 | 86 | 5 | 6 | 1.5 | 1.5 | 7.3 | 0.31 | 1.92 | 1.06 | 0.672 | **E33011J** |
| | 95 | 30 | 30 | 23 | 1.5 | 1.5 | **E33111J** | 3CE | 116000 | 161000 | 4000 | 5300 | 63.5 | 62 | 83 | 91 | 5 | 7 | 1.5 | 1.5 | 7.5 | 0.37 | 1.60 | 0.88 | 0.868 | **E33111J** |
| | 100 | 22.75 | 21 | 18 | 2 | 1.5 | **E30211J** | 3DB | 94600 | 113000 | 3900 | 5200 | 65 | 64 | 88 | 94 | 4 | 4.5 | 2 | 1.5 | 2.0 | 0.40 | 1.48 | 0.81 | 0.732 | **E30211J** |
| | 100 | 26.75 | 25 | 21 | 2 | 1.5 | **E32211J** | 3DC | 107000 | 133000 | 3900 | 5200 | 65 | 63 | 87 | 95 | 4 | 5.5 | 2 | 1.5 | 3.7 | 0.40 | 1.48 | 0.81 | 0.863 | **E32211J** |
| | 100 | 35 | 35 | 27 | 2 | 1.5 | **E33211J** | 3DE | 142000 | 189000 | 3900 | 5200 | 65 | 62 | 85 | 96 | 6 | 8 | 2 | 1.5 | 9.7 | 0.40 | 1.50 | 0.83 | 1.18 | **E33211J** |
| | 120 | 31.5 | 29 | 25 | 2.5 | 2 | **E30311J** | 2FB | 149000 | 170000 | 3300 | 4500 | 67 | 71 | 104 | 111 | 4 | 6.5 | 2 | 2 | 6.0 | 0.35 | 1.74 | 0.96 | 1.65 | **E30311J** |
| | 120 | 31.5 | 29 | 21 | 2.5 | 2 | **E30311DJ** | 7FB | 129000 | 148000 | 2900 | 4000 | 67 | 68 | 94 | 113 | 4 | 10.5 | 2 | 2 | –6.9 | 0.83 | 0.73 | 0.40 | 1.59 | **E30311DJ** |
| | 120 | 45.5 | 43 | 35 | 2.5 | 2 | **E32311J** | 2FD | 200000 | 250000 | 3400 | 4500 | 67 | 68 | 99 | 111 | 4 | 10.5 | 2 | 2 | 13.1 | 0.35 | 1.74 | 0.96 | 2.38 | **E32311J** |
| 60 | 85 | 17 | 17 | 14 | 1 | 1 | **E32912J** | 2BC | 46200 | 78200 | 4100 | 5500 | 65.5 | 66 | 77 | 81 | 3 | 3 | 1 | 1 | 1.4 | 0.33 | 1.81 | 1.00 | 0.306 | **E32912J** |
| | 95 | 23 | 23 | 17.5 | 1.5 | 1.5 | **E32012J** | 4CC | 86100 | 127000 | 3900 | 5200 | 68.5 | 67 | 85 | 91 | 4 | 5.5 | 1.5 | 1.5 | 2.0 | 0.43 | 1.39 | 0.77 | 0.621 | **E32012J** |
| | 95 | 27 | 27 | 21 | 1.5 | 1.5 | **E33012J** | 2CE | 101000 | 162000 | 3900 | 5200 | 68.5 | 67 | 85 | 90 | 5 | 6 | 1.5 | 1.5 | 6.9 | 0.33 | 1.83 | 1.01 | 0.719 | **E33012J** |
| | 100 | 30 | 30 | 23 | 1.5 | 1.5 | **E33112J** | 3CE | 118000 | 170000 | 3600 | 4900 | 68.5 | 67 | 88 | 96 | 5 | 7 | 1.5 | 1.5 | 6.3 | 0.40 | 1.51 | 0.83 | 0.923 | **E33112J** |
| | 110 | 23.75 | 22 | 19 | 2 | 1.5 | **E30212J** | 3EB | 106000 | 127000 | 3500 | 4700 | 70 | 70 | 96 | 103 | 4 | 4.5 | 2 | 1.5 | 1.8 | 0.40 | 1.48 | 0.81 | 0.945 | **E30212J** |
| | 110 | 29.75 | 28 | 24 | 2 | 1.5 | **E32212J** | 3EC | 132000 | 167000 | 3500 | 4700 | 70 | 69 | 95 | 104 | 4 | 5.5 | 2 | 1.5 | 4.6 | 0.40 | 1.48 | 0.81 | 1.19 | **E32212J** |
| | 110 | 38 | 38 | 29 | 2 | 1.5 | **E33212J** | 3EE | 174000 | 239000 | 3600 | 4700 | 70 | 69 | 93 | 105 | 6 | 9 | 2 | 1.5 | 10.8 | 0.40 | 1.48 | 0.82 | 1.57 | **E33212J** |
| | 130 | 33.5 | 31 | 26 | 3 | 2.5 | **E30312J** | 2FB | 173000 | 201000 | 3100 | 4100 | 74 | 77 | 112 | 120 | 4 | 7.5 | 2.5 | 2 | 6.6 | 0.35 | 1.74 | 0.96 | 2.08 | **E30312J** |
| | 130 | 33.5 | 31 | 22 | 3 | 2.5 | **E30312DJ** | 7FB | 153000 | 179000 | 2600 | 3700 | 74 | 73 | 103 | 124 | 4 | 11.5 | 2.5 | 2 | –7.3 | 0.83 | 0.73 | 0.40 | 2.01 | **E30312DJ** |
| | 130 | 48.5 | 46 | 37 | 3 | 2.5 | **32312J** | 2FD | 221000 | 275000 | 3100 | 4200 | 74 | 74 | 107 | 120 | 4 | 11.5 | 2.5 | 2 | 16.2 | 0.35 | 1.74 | 0.96 | 2.92 | **32312J** |
| 65 | 90 | 17 | 17 | 14 | 1 | 1 | **E32913J** | 2BC | 47400 | 83100 | 3900 | 5200 | 70.5 | 70 | 81 | 86 | 3 | 3 | 1 | 1 | 0.2 | 0.35 | 1.70 | 0.93 | 0.327 | **E32913J** |
| | 100 | 23 | 23 | 17.5 | 1.5 | 1.5 | **E32013J** | 4CC | 90000 | 137000 | 3600 | 4800 | 73.5 | 72 | 90 | 97 | 4 | 5.5 | 1.5 | 1.5 | 0.5 | 0.46 | 1.31 | 0.72 | 0.664 | **E32013J** |
| | 100 | 27 | 27 | 21 | 1.5 | 1.5 | **E33013J** | 2CE | 103000 | 169000 | 3600 | 4800 | 73.5 | 72 | 89 | 96 | 5 | 6 | 1.5 | 1.5 | 5.9 | 0.35 | 1.72 | 0.95 | 0.762 | **E33013J** |
| | 110 | 34 | 34 | 26.5 | 1.5 | 1.5 | **E33113J** | 3DE | 152000 | 223000 | 3400 | 4600 | 73.5 | 73 | 96 | 106 | 6 | 7.5 | 1.5 | 1.5 | 8.1 | 0.39 | 1.55 | 0.85 | 1.33 | **E33113J** |
| | 120 | 24.75 | 23 | 20 | 2 | 1.5 | **E30213J** | 3EB | 128000 | 156000 | 3200 | 4300 | 75 | 77 | 106 | 113 | 4 | 4.5 | 2 | 1.5 | 0.6 | 0.40 | 1.48 | 0.81 | 1.18 | **E30213J** |
| | 120 | 32.75 | 31 | 27 | 2 | 1.5 | **E32213J** | 3EC | 157000 | 203000 | 3200 | 4300 | 75 | 76 | 104 | 115 | 4 | 5.5 | 2 | 1.5 | 6.1 | 0.40 | 1.48 | 0.82 | 1.58 | **E32213J** |
| | 120 | 41 | 41 | 32 | 2 | 1.5 | **E33213J** | 3EE | 200000 | 277000 | 3200 | 4300 | 75 | 74 | 102 | 115 | 7 | 9 | 2 | 1.5 | 11 | 0.39 | 1.54 | 0.85 | 2.02 | **E33213J** |
| | 140 | 36 | 33 | 28 | 3 | 2.5 | **E30313J** | 2GB | 204000 | 239000 | 2800 | 3800 | 79 | 83 | 122 | 130 | 4 | 8 | 2.5 | 2 | 6.7 | 0.35 | 1.74 | 0.96 | 2.56 | **E30313J** |
| | 140 | 36 | 33 | 23 | 3 | 2.5 | **E30313DJ** | 7GB | 176000 | 209000 | 2400 | 3400 | 79 | 79 | 111 | 133 | 4 | 13 | 2.5 | 2 | –8.3 | 0.83 | 0.73 | 0.40 | 2.44 | **E30313DJ** |
| | 140 | 51 | 48 | 39 | 3 | 2.5 | **E32313J** | 2GD | 276000 | 357000 | 2900 | 3900 | 79 | 80 | 117 | 130 | 4 | 12 | 2.5 | 2 | 16.3 | 0.35 | 1.74 | 0.96 | 3.64 | **E32313J** |

Note: (1) Minus value of load center "a" indicates that the center is located outside of cone backface.

# Tapered Roller Bearings

## Metric Series

Bore Diameter: 70～80mm

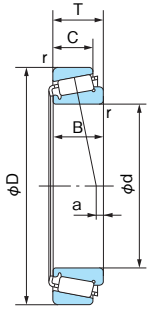


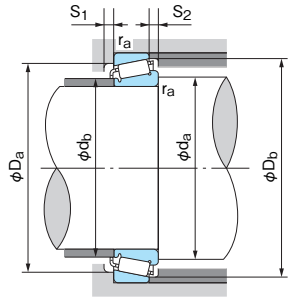


**■Dynamic equivalent radial load**

Pr=XFr+YFa

| $\frac{Fa}{Fr} \leqq e$ | | $\frac{Fa}{Fr} > e$ | |
|---|---|---|---|
| X | Y | X | Y |
| 1 | 0 | 0.4 | $Y_1$ |

Values e and $Y_1$ from table.

**■Static equivalent radial load**

Larger value of following to be used:

Por=0.5Fr+$Y_0$Fa

Por=Fr

Values $Y_0$ from table.

1N=0.102kgf

| Boundary dimensions (mm) | | | | | | | Bearing No. | (Ref.) ISO355 Dimension series | Basic dynamic load rating Cr (N) | Basic static load rating Cor (N) | Limiting speed (min⁻¹) | | Abutment and fillet dimensions (mm) | | | | | | | | Load center (mm) a (1) | Constant e | Axial load factor | | Mass(kg) Reference | Bearing No. |
|---|---|---|---|---|---|---|---|---|---|---|---|---|---|---|---|---|---|---|---|---|---|---|---|---|---|---|
| d | D | T | B | C | Cone r (min) | Cup r (min) | | | | | Grease lubrication | Oil lubrication | da (min) | db (max) | Da (min) | Db (min) | $S_1$ (min) | $S_2$ (min) | Cone ra (max) | Cup ra (max) | | | $Y_1$ | $Y_0$ | | |
| 70 | 100 | 20 | 20 | 16 | 1 | 1 | **E32914J** | 2BC | 71000 | 115000 | 3500 | 4700 | 75.5 | 77 | 91 | 96 | 4 | 4 | 1 | 1 | 2.2 | 0.32 | 1.90 | 1.05 | 0.496 | **E32914J** |
| | 110 | 25 | 25 | 19 | 1.5 | 1.5 | **E32014J** | 4CC | 108000 | 163000 | 3300 | 4400 | 78.5 | 78 | 98 | 105 | 5 | 6 | 1.5 | 1.5 | 1.4 | 0.43 | 1.38 | 0.76 | 0.884 | **E32014J** |
| | 110 | 31 | 31 | 25.5 | 1.5 | 1.5 | **E33014J** | 2CE | 134000 | 208000 | 3300 | 4400 | 78.5 | 78 | 99 | 105 | 5 | 5.5 | 1.5 | 1.5 | 8.1 | 0.28 | 2.11 | 1.16 | 1.09 | **E33014J** |
| | 125 | 26.25 | 24 | 21 | 2 | 1.5 | **E30214J** | 3EB | 138000 | 173000 | 3100 | 4100 | 80 | 81 | 110 | 118 | 4 | 5 | 2 | 1.5 | 0.3 | 0.42 | 1.43 | 0.79 | 1.32 | **E30214J** |
| | 125 | 33.25 | 31 | 27 | 2 | 1.5 | **E32214J** | 3EC | 169000 | 225000 | 3100 | 4100 | 80 | 80 | 108 | 119 | 4 | 6 | 2 | 1.5 | 4.0 | 0.42 | 1.43 | 0.79 | 1.71 | **E32214J** |
| | 125 | 41 | 41 | 32 | 2 | 1.5 | **E33214J** | 3EE | 206000 | 294000 | 3100 | 4100 | 80 | 79 | 107 | 120 | 7 | 9 | 2 | 1.5 | 9.8 | 0.41 | 1.47 | 0.81 | 2.16 | **E33214J** |
| | 150 | 38 | 35 | 30 | 3 | 2.5 | **E30314J** | 2GB | 230000 | 273000 | 2600 | 3500 | 84 | 89 | 130 | 140 | 4 | 8 | 2.5 | 2 | 7.5 | 0.35 | 1.74 | 0.96 | 3.08 | **E30314J** |
| | 150 | 38 | 35 | 25 | 3 | 2.5 | **E30314DJ** | 7GB | 197000 | 235000 | 2300 | 3200 | 84 | 84 | 118 | 142 | 4 | 13 | 2.5 | 2 | –9.1 | 0.83 | 0.73 | 0.40 | 2.97 | **E30314DJ** |
| | 150 | 54 | 51 | 42 | 3 | 2.5 | **E32314J** | 2GD | 317000 | 414000 | 2700 | 3600 | 84 | 86 | 125 | 140 | 4 | 12 | 2.5 | 2 | 16.6 | 0.35 | 1.74 | 0.96 | 4.50 | **E32314J** |
| 75 | 105 | 20 | 20 | 16 | 1 | 1 | **E32915J** | 2BC | 73600 | 123000 | 3300 | 4400 | 80.5 | 81 | 97 | 101 | 4 | 4 | 1 | 1 | 1.1 | 0.33 | 1.80 | 0.99 | 0.526 | **E32915J** |
| | 115 | 25 | 25 | 19 | 1.5 | 1.5 | **E32015J** | 4CC | 110000 | 169000 | 3100 | 4200 | 83.5 | 83 | 103 | 110 | 5 | 6 | 1.5 | 1.5 | –0.1 | 0.46 | 1.31 | 0.72 | 0.93 | **E32015J** |
| | 115 | 31 | 31 | 25.5 | 1.5 | 1.5 | **E33015J** | 2CE | 141000 | 225000 | 3000 | 4100 | 83.5 | 83 | 104 | 110 | 6 | 5.5 | 1.5 | 1.5 | 8.1 | 0.30 | 2.01 | 1.11 | 1.16 | **E33015J** |
| | 125 | 37 | 37 | 29 | 2 | 1.5 | **E33115J** | 3DE | 186000 | 280000 | 3000 | 4000 | 85 | 84 | 109 | 120 | 6 | 8 | 2 | 1.5 | 7.5 | 0.40 | 1.51 | 0.83 | 1.84 | **E33115J** |
| | 130 | 27.25 | 25 | 22 | 2 | 1.5 | **E30215J** | 4DB | 142000 | 181000 | 2900 | 3900 | 85 | 86 | 115 | 124 | 4 | 5 | 2 | 1.5 | –0.3 | 0.44 | 1.38 | 0.76 | 1.42 | **E30215J** |
| | 130 | 33.25 | 31 | 27 | 2 | 1.5 | **E32215J** | 4DC | 174000 | 234000 | 2900 | 3900 | 85 | 85 | 114 | 123 | 4 | 6 | 2 | 1.5 | 3.0 | 0.44 | 1.38 | 0.76 | 1.77 | **E32215J** |
| | 130 | 41 | 41 | 31 | 2 | 1.5 | **E33215J** | 3EE | 212000 | 310000 | 2900 | 3900 | 85 | 83 | 111 | 125 | 7 | 10 | 2 | 1.5 | 8.5 | 0.43 | 1.40 | 0.77 | 2.26 | **E33215J** |
| | 160 | 40 | 37 | 31 | 3 | 2.5 | **E30315** | 2GB | 250000 | 297000 | 2500 | 3300 | 89 | 95 | 139 | 149 | 4 | 9 | 2.5 | 2 | 8.1 | 0.35 | 1.73 | 0.95 | 3.52 | **E30315** |
| | 160 | 40 | 37 | 26 | 3 | 2.5 | **E30315D** | — | 222000 | 266000 | 2100 | 2900 | 89 | 91 | 127 | 151 | 6 | 14 | 2.5 | 2 | –8.8 | 0.81 | 0.74 | 0.41 | 3.47 | **E30315D** |
| | 160 | 58 | 55 | 45 | 3 | 2.5 | **E32315J** | 2GD | 363000 | 481000 | 2500 | 3300 | 89 | 91 | 133 | 149 | 4 | 13 | 2.5 | 2 | 18 | 0.35 | 1.74 | 0.96 | 5.41 | **E32315J** |
| 80 | 110 | 20 | 20 | 16 | 1 | 1 | **E32916J** | 2BC | 76100 | 131000 | 3100 | 4200 | 85.5 | 86 | 101 | 106 | 4 | 4 | 1 | 1 | –0.1 | 0.35 | 1.71 | 0.94 | 0.556 | **E32916J** |
| | 125 | 29 | 29 | 22 | 1.5 | 1.5 | **E32016J** | 3CC | 147000 | 225000 | 2900 | 3900 | 88.5 | 89 | 112 | 120 | 6 | 7 | 1.5 | 1.5 | 2.3 | 0.42 | 1.42 | 0.78 | 1.32 | **E32016J** |
| | 125 | 36 | 36 | 29.5 | 1.5 | 1.5 | **E33016J** | 2CE | 173000 | 288000 | 2900 | 3900 | 88.5 | 90 | 112 | 119 | 6 | 6.5 | 1.5 | 1.5 | 10.9 | 0.28 | 2.16 | 1.19 | 1.63 | **E33016J** |
| | 130 | 37 | 37 | 29 | 2 | 1.5 | **E33116J** | 3DE | 191000 | 294000 | 2800 | 3800 | 90 | 89 | 114 | 126 | 6 | 8 | 2 | 1.5 | 6.5 | 0.42 | 1.44 | 0.79 | 1.93 | **E33116J** |
| | 140 | 28.25 | 26 | 22 | 2.5 | 2 | **E30216J** | 3EB | 161000 | 202000 | 2700 | 3600 | 92 | 91 | 124 | 132 | 4 | 6 | 2 | 2 | –0.3 | 0.42 | 1.43 | 0.79 | 1.72 | **E30216J** |
| | 140 | 35.25 | 33 | 28 | 2.5 | 2 | **E32216J** | 3EC | 203000 | 271000 | 2700 | 3600 | 92 | 90 | 122 | 134 | 4 | 7 | 2 | 2 | 3.8 | 0.42 | 1.43 | 0.79 | 2.17 | **E32216J** |
| | 140 | 46 | 46 | 35 | 2.5 | 2 | **E33216** | 3EE | 250000 | 371000 | 2700 | 3600 | 92 | 89 | 119 | 135 | 7 | 11 | 2 | 2 | 10.3 | 0.43 | 1.41 | 0.78 | 2.99 | **E33216** |
| | 170 | 42.5 | 39 | 33 | 3 | 2.5 | **E30316J** | 2GB | 294000 | 355000 | 2300 | 3100 | 94 | 102 | 148 | 159 | 4 | 9.5 | 2.5 | 2 | 7.7 | 0.35 | 1.73 | 0.96 | 4.46 | **E30316J** |
| | 170 | 42.5 | 39 | 27 | 3 | 2.5 | **E30316DJ** | 7GB | 236000 | 282000 | 2000 | 2800 | 94 | 97 | 134 | 159 | 6 | 15.5 | 2.5 | 2 | –11.0 | 0.83 | 0.73 | 0.40 | 4.12 | **E30316DJ** |
| | 170 | 61.5 | 58 | 48 | 3 | 2.5 | **E32316** | 2GD | 378000 | 497000 | 2300 | 3100 | 94 | 98 | 142 | 159 | 4 | 13.5 | 2.5 | 2 | 19.5 | 0.35 | 1.73 | 0.95 | 6.32 | **E32316** |

Note: (1) Minus value of load center “a” indicates that the center is located outside of cone backface.

# Tapered Roller Bearings

## Metric Series

Bore Diameter: 85～95mm

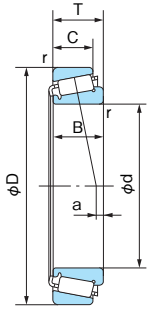


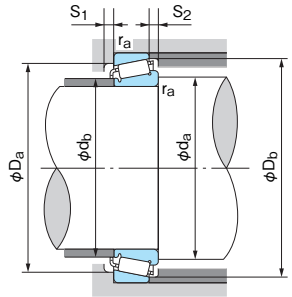


**■Dynamic equivalent radial load**

Pr=XFr+YFa

| $\frac{Fa}{Fr} \leqq e$ | | $\frac{Fa}{Fr} > e$ | |
|---|---|---|---|
| X | Y | X | Y |
| 1 | 0 | 0.4 | $Y_1$ |

Values e and $Y_1$ from table.

**■Static equivalent radial load**

Larger value of following to be used:

$P_{or}=0.5F_r+Y_0F_a$

$P_{or}=F_r$

Values $Y_0$ from table.

1N=0.102kgf

| Boundary dimensions (mm) | | | | | | | Bearing No. | (Ref.) ISO355 Dimension series | Basic dynamic load rating Cr (N) | Basic static load rating Cor (N) | Limiting speed (min⁻¹) | | Abutment and fillet dimensions (mm) | | | | | | | | Load center (mm) a (1) | Constant e | Axial load factor | | Mass(kg) Reference | Bearing No. |
|---|---|---|---|---|---|---|---|---|---|---|---|---|---|---|---|---|---|---|---|---|---|---|---|---|---|---|
| d | D | T | B | C | Cone r (min) | Cup r (min) | | | | | Grease lubrication | Oil lubrication | da (min) | db (max) | Da (min) | Db (min) | $S_1$ (min) | $S_2$ (min) | Cone ra (max) | Cup ra (max) | | | $Y_1$ | $Y_0$ | | |
| 85 | 120 | 23 | 23 | 18 | 1.5 | 1.5 | **E32917J** | 2BC | 97100 | 165000 | 2900 | 3900 | 93.5 | 93 | 109 | 115 | 5 | 5 | 1.5 | 1.5 | 1.8 | 0.33 | 1.83 | 1.01 | 0.794 | **E32917J** |
| | 130 | 29 | 29 | 22 | 1.5 | 1.5 | **E32017J** | 4CC | 150000 | 234000 | 2800 | 3700 | 93.5 | 94 | 117 | 125 | 6 | 7 | 1.5 | 1.5 | 1.0 | 0.44 | 1.36 | 0.75 | 1.38 | **E32017J** |
| | 130 | 36 | 36 | 29.5 | 1.5 | 1.5 | **E33017J** | 2CE | 177000 | 300000 | 2800 | 3700 | 93.5 | 94 | 118 | 125 | 6 | 6.5 | 1.5 | 1.5 | 9.7 | 0.29 | 2.06 | 1.13 | 1.72 | **E33017J** |
| | 140 | 41 | 41 | 32 | 2.5 | 2.5 | **E33117J** | 3DE | 224000 | 346000 | 2600 | 3500 | 97 | 95 | 122 | 135 | 7 | 9 | 2 | 2 | 7.8 | 0.41 | 1.48 | 0.81 | 2.43 | **E33117J** |
| | 150 | 30.5 | 28 | 24 | 2.5 | 2 | **E30217J** | 3EB | 182000 | 231000 | 2500 | 3400 | 97 | 97 | 132 | 141 | 5 | 6.5 | 2 | 2 | 0.1 | 0.42 | 1.43 | 0.79 | 2.17 | **E30217J** |
| | 150 | 38.5 | 36 | 30 | 2.5 | 2 | **E32217J** | 3EC | 232000 | 315000 | 2500 | 3300 | 97 | 96 | 130 | 142 | 5 | 8.5 | 2 | 2 | 4.3 | 0.42 | 1.43 | 0.79 | 2.80 | **E32217J** |
| | 150 | 49 | 49 | 37 | 2.5 | 2 | **E33217J** | 3EE | 294000 | 439000 | 2500 | 3400 | 97 | 95 | 128 | 144 | 7 | 12 | 2 | 2 | 11.9 | 0.42 | 1.43 | 0.79 | 3.63 | **E33217J** |
| | 180 | 44.5 | 41 | 34 | 4 | 3 | **E30317** | — | 305000 | 367000 | 2200 | 2900 | 103 | 107 | 156 | 167 | 5 | 10.5 | 3 | 2.5 | 8.7 | 0.35 | 1.73 | 0.95 | 4.97 | **E30317** |
| | 180 | 44.5 | 41 | 28 | 4 | 3 | **E30317DJ** | — | 263000 | 317000 | 1900 | 2600 | 103 | 103 | 143 | 169 | 6 | 16.5 | 3 | 2.5 | –11.8 | 0.83 | 0.73 | 0.41 | 4.81 | **E30317DJ** |
| | 180 | 63.5 | 60 | 49 | 4 | 3 | **E32317J** | 2GD | 439000 | 587000 | 2200 | 3000 | 103 | 103 | 150 | 167 | 5 | 14.5 | 3 | 2.5 | 19.7 | 0.35 | 1.74 | 0.96 | 7.42 | **E32317J** |
| 90 | 125 | 23 | 23 | 18 | 1.5 | 1.5 | **E32918J** | 2BC | 101000 | 175000 | 2800 | 3700 | 98.5 | 97 | 114 | 120 | 5 | 5 | 1.5 | 1.5 | 0.7 | 0.34 | 1.75 | 0.96 | 0.834 | **E32918J** |
| | 140 | 32 | 32 | 24 | 2 | 1.5 | **E32018J** | 3CC | 178000 | 276000 | 2600 | 3500 | 100 | 100 | 125 | 134 | 6 | 8 | 2 | 1.5 | 2.2 | 0.42 | 1.42 | 0.78 | 1.80 | **E32018J** |
| | 140 | 39 | 39 | 32.5 | 2 | 2 | **E33018J** | 2CE | 221000 | 367000 | 2600 | 3400 | 100 | 100 | 127 | 135 | 7 | 6.5 | 2 | 1.5 | 11.9 | 0.27 | 2.23 | 1.23 | 2.22 | **E33018J** |
| | 160 | 32.5 | 30 | 26 | 2.5 | 2 | **E30218J** | 3FB | 204000 | 261000 | 2400 | 3200 | 102 | 103 | 140 | 150 | 5 | 6.5 | 2 | 2 | –0.1 | 0.42 | 1.43 | 0.79 | 2.65 | **E30218J** |
| | 160 | 42.5 | 40 | 34 | 2.5 | 2 | **E32218J** | 3FC | 263000 | 362000 | 2400 | 3200 | 102 | 102 | 138 | 152 | 5 | 8.5 | 2 | 2 | 5.5 | 0.42 | 1.43 | 0.79 | 3.47 | **E32218J** |
| | 190 | 46.5 | 43 | 36 | 4 | 3 | **E30318** | — | 336000 | 407000 | 2100 | 2700 | 108 | 113 | 165 | 177 | 5 | 10.5 | 3 | 2.5 | 9.3 | 0.35 | 1.73 | 0.95 | 5.78 | **E30318** |
| | 190 | 46.5 | 43 | 30 | 4 | 3 | **E30318D** | — | 282000 | 336000 | 1700 | 2400 | 108 | 109 | 151 | 179 | 6 | 16.5 | 3 | 2.5 | –12.6 | 0.81 | 0.74 | 0.41 | 5.60 | **E30318D** |
| | 190 | 67.5 | 64 | 53 | 4 | 3 | **E32318J** | — | 461000 | 614000 | 2100 | 2800 | 108 | 108 | 157 | 177 | 5 | 14.5 | 3 | 2.5 | 20.9 | 0.35 | 1.74 | 0.96 | 8.61 | **E32318J** |
| 95 | 130 | 23 | 23 | 18 | 1.5 | 1.5 | **E32919J** | 2BC | 104000 | 186000 | 2600 | 3500 | 103.5 | 102 | 119 | 125 | 5 | 5 | 1.5 | 1.5 | –0.5 | 0.36 | 1.68 | 0.92 | 0.876 | **E32919J** |
| | 145 | 32 | 32 | 24 | 2 | 1.5 | **E32019J** | 4CC | 182000 | 287000 | 2500 | 3300 | 105 | 105 | 130 | 140 | 6 | 8 | 2 | 1.5 | 0.8 | 0.44 | 1.36 | 0.75 | 1.88 | **E32019J** |
| | 145 | 39 | 39 | 32.5 | 2 | 1.5 | **E33019J** | 2CE | 226000 | 382000 | 2500 | 3300 | 105 | 104 | 131 | 139 | 7 | 6.5 | 2 | 1.5 | 11.2 | 0.28 | 2.16 | 1.19 | 2.31 | **E33019J** |
| | 170 | 34.5 | 32 | 27 | 3 | 2.5 | **E30219J** | 3FB | 231000 | 299000 | 2200 | 3000 | 109 | 110 | 149 | 159 | 5 | 7.5 | 2.5 | 2 | –0.4 | 0.42 | 1.43 | 0.79 | 3.20 | **E30219J** |
| | 170 | 45.5 | 43 | 37 | 3 | 2.5 | **E32219J** | 3FC | 311000 | 439000 | 2200 | 3000 | 109 | 108 | 145 | 161 | 5 | 8.5 | 2.5 | 2 | 6.6 | 0.42 | 1.43 | 0.79 | 4.34 | **E32219J** |
| | 170 | 58 | 58 | 44 | 3 | 2.5 | **E33219J** | 3FE | 374000 | 582000 | 2200 | 2900 | 109 | 107 | 144 | 163 | 9 | 14 | 2.5 | 2 | 15.2 | 0.41 | 1.47 | 0.81 | 5.66 | **E33219J** |
| | 200 | 49.5 | 45 | 38 | 4 | 3 | **30319** | — | 317000 | 368000 | 2000 | 2600 | 113 | 118 | 172 | 186 | 5 | 11.5 | 3 | 2.5 | 9.7 | 0.35 | 1.73 | 0.95 | 6.32 | **30319** |
| | 200 | 49.5 | 45 | 32 | 4 | 3 | **E30319DJ** | — | 319000 | 391000 | 1700 | 2300 | 113 | 113 | 157 | 187 | 6 | 17.5 | 3 | 2.5 | –13.2 | 0.81 | 0.73 | 0.40 | 6.68 | **E30319DJ** |
| | 200 | 71.5 | 67 | 55 | 4 | 3 | **E32319J** | — | 517000 | 695000 | 2000 | 2600 | 113 | 115 | 166 | 186 | 5 | 16.5 | 3 | 2.5 | 21.7 | 0.35 | 1.74 | 0.96 | 10.1 | **E32319J** |

Note: (1) Minus value of load center "a" indicates that the center is located outside of cone backface.

# Tapered Roller Bearings

## Metric Series

Bore Diameter: 100～110mm

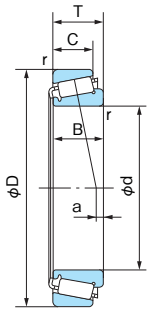


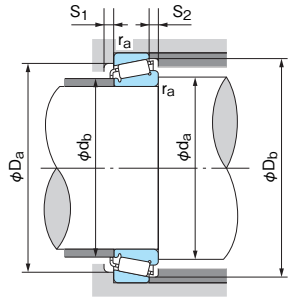


**■Dynamic equivalent radial load**

Pr=XFr+YFa

| $\frac{Fa}{Fr} \leqq e$ | | $\frac{Fa}{Fr} > e$ | |
|---|---|---|---|
| X | Y | X | Y |
| 1 | 0 | 0.4 | $Y_1$ |

Values e and $Y_1$ from table.

**■Static equivalent radial load**

Larger value of following to be used:

Por=0.5Fr+$Y_0$Fa

Por=Fr

Values $Y_0$ from table.

1N=0.102kgf

| Boundary dimensions (mm) | | | | | | | Bearing No. | (Ref.) ISO355 Dimension series | Basic dynamic load rating Cr (N) | Basic static load rating Cor (N) | Limiting speed (min⁻¹) | | Abutment and fillet dimensions (mm) | | | | | | | | Load center (mm) a (1) | Constant e | Axial load factor | | Mass(kg) Reference | Bearing No. |
|---|---|---|---|---|---|---|---|---|---|---|---|---|---|---|---|---|---|---|---|---|---|---|---|---|---|---|
| d | D | T | B | C | Cone r (min) | Cup r (min) | | | | | Grease lubrication | Oil lubrication | da (min) | db (max) | Da (min) | Db (min) | $S_1$ (min) | $S_2$ (min) | Cone ra (max) | Cup ra (max) | | | $Y_1$ | $Y_0$ | | |
| 100 | 140 | 25 | 25 | 20 | 1.5 | 1.5 | **E32920J** | 2CC | 126000 | 217000 | 2400 | 3300 | 108.5 | 108 | 128 | 135 | 5 | 5 | 1.5 | 1.5 | 1.0 | 0.33 | 1.82 | 1.00 | 1.19 | **E32920J** |
| | 150 | 32 | 32 | 24 | 2 | 1.5 | **E32020J** | 4CC | 185000 | 298000 | 2400 | 3200 | 110 | 109 | 134 | 144 | 6 | 8 | 2 | 1.5 | –0.6 | 0.46 | 1.31 | 0.72 | 1.95 | **E32020J** |
| | 150 | 39 | 39 | 32.5 | 2 | 1.5 | **E33020J** | 2CE | 231000 | 397000 | 2400 | 3200 | 110 | 108 | 135 | 143 | 7 | 6.5 | 2 | 1.5 | 10.4 | 0.29 | 2.09 | 1.15 | 2.40 | **E33020J** |
| | 165 | 52 | 52 | 40 | 2.5 | 2.5 | **E33120J** | 3EE | 325000 | 523000 | 2200 | 3000 | 112 | 111 | 142 | 159 | 8 | 12 | 2 | 2 | 11.9 | 0.41 | 1.48 | 0.81 | 4.29 | **E33120J** |
| | 180 | 37 | 34 | 29 | 3 | 2.5 | **E30220J** | 3FB | 258000 | 338000 | 2100 | 2800 | 114 | 116 | 157 | 168 | 5 | 8 | 2.5 | 2 | 0.2 | 0.42 | 1.43 | 0.79 | 3.83 | **E30220J** |
| | 180 | 49 | 46 | 39 | 3 | 2.5 | **E32220J** | 3FC | 347000 | 495000 | 2100 | 2800 | 114 | 114 | 154 | 171 | 5 | 10 | 2.5 | 2 | 6.9 | 0.42 | 1.43 | 0.79 | 5.21 | **E32220J** |
| | 180 | 63 | 63 | 48 | 3 | 2.5 | **E33220** | 3FE | 431000 | 680000 | 2100 | 2800 | 114 | 112 | 151 | 172 | 10 | 15 | 2.5 | 2 | 17.3 | 0.40 | 1.48 | 0.82 | 6.92 | **E33220** |
| | 215 | 51.5 | 47 | 39 | 4 | 3 | **30320** | — | 344000 | 400000 | 1800 | 2400 | 118 | 127 | 184 | 200 | 6 | 12.5 | 3 | 2.5 | 10.1 | 0.35 | 1.73 | 0.95 | 7.76 | **30320** |
| | 215 | 51.5 | 47 | 34 | 4 | 3 | **30320D** | — | 318000 | 374000 | 1500 | 2100 | 118 | 121 | 183 | 204 | 5 | 17 | 3 | 2.5 | –14.4 | 0.81 | 0.74 | 0.41 | 8.02 | **30320D** |
| | 215 | 77.5 | 73 | 60 | 4 | 3 | **32320** | — | 491000 | 637000 | 1800 | 2400 | 118 | 123 | 177 | 200 | 8 | 17.5 | 3 | 2.5 | 24.9 | 0.35 | 1.73 | 0.95 | 12.2 | **32320** |
| | 215 | 56.5 | 51 | 35 | 4 | 3 | **E31320J** | — | 373000 | 459000 | 1500 | 2200 | 118 | 120 | 183 | 202 | 6 | 17.5 | 3 | 2.5 | –11.2 | 0.83 | 0.73 | 0.40 | 8.72 | **E31320J** |
| 105 | 145 | 25 | 25 | 20 | 1.5 | 1.5 | **E32921J** | 2CC | 128000 | 224000 | 2400 | 3100 | 113.5 | 113 | 133 | 140 | 5 | 5 | 1.5 | 1.5 | –0.1 | 0.34 | 1.75 | 0.96 | 1.23 | **E32921J** |
| | 160 | 35 | 35 | 26 | 2.5 | 2 | **E32021J** | 4DC | 215000 | 344000 | 2200 | 3000 | 117 | 116 | 143 | 154 | 6 | 9 | 2 | 2 | 0.5 | 0.44 | 1.35 | 0.74 | 2.45 | **E32021J** |
| | 160 | 43 | 43 | 34 | 2.5 | 2 | **E33021J** | 2DE | 267000 | 461000 | 2200 | 3000 | 117 | 116 | 145 | 153 | 7 | 9 | 2 | 2 | 12.1 | 0.28 | 2.12 | 1.17 | 3.08 | **E33021J** |
| | 190 | 39 | 36 | 30 | 3 | 2.5 | **E30221J** | — | 288000 | 380000 | 2000 | 2600 | 119 | 122 | 165 | 178 | 6 | 9 | 2.5 | 2 | 0.0 | 0.42 | 1.43 | 0.79 | 4.49 | **E30221J** |
| | 190 | 53 | 50 | 43 | 3 | 2.5 | **E32221J** | 3FC | 392000 | 567000 | 2000 | 2700 | 119 | 120 | 161 | 180 | 6 | 10 | 2.5 | 2 | 8.2 | 0.42 | 1.43 | 0.79 | 6.37 | **E32221J** |
| | 225 | 53.5 | 49 | 41 | 4 | 3 | **30321** | — | 371000 | 432000 | 1700 | 2300 | 123 | 132 | 193 | 209 | 7 | 12.5 | 3 | 2.5 | 10.4 | 0.35 | 1.73 | 0.95 | 8.74 | **30321** |
| | 225 | 53.5 | 49 | 36 | 4 | 3 | **30321D** | — | 339000 | 396000 | 1400 | 2000 | 123 | 127 | 193 | 209 | 6 | 11 | 3 | 2.5 | –15.6 | 0.81 | 0.74 | 0.41 | 8.76 | **30321D** |
| | 225 | 81.5 | 77 | 63 | 4 | 3 | **E32321J** | 2GD | 635000 | 886000 | 1800 | 2300 | 123 | 128 | 185 | 209 | 8 | 18.5 | 3 | 2.5 | 25.4 | 0.35 | 1.74 | 0.96 | 14.9 | **E32321J** |
| 110 | 150 | 25 | 25 | 20 | 1.5 | 1.5 | **E32922J** | 2CC | 129000 | 231000 | 2300 | 3000 | 118.5 | 118 | 138 | 145 | 5 | 5 | 1.5 | 1.5 | –1.3 | 0.36 | 1.69 | 0.93 | 1.28 | **E32922J** |
| | 170 | 38 | 38 | 29 | 2.5 | 2 | **E32022J** | 4DC | 248000 | 395000 | 2100 | 2800 | 122 | 122 | 152 | 163 | 7 | 9 | 2 | 2 | 1.9 | 0.43 | 1.39 | 0.77 | 3.12 | **E32022J** |
| | 170 | 47 | 47 | 37 | 2.5 | 2 | **E33022J** | 2DE | 287000 | 502000 | 2100 | 2800 | 122 | 123 | 152 | 161 | 7 | 10 | 2 | 2 | 13.6 | 0.29 | 2.09 | 1.15 | 3.81 | **E33022J** |
| | 180 | 56 | 56 | 43 | 2.5 | 2 | **E33122J** | 3EE | 369000 | 634000 | 2000 | 2700 | 122 | 121 | 155 | 174 | 9 | 13 | 2 | 2 | 11.5 | 0.42 | 1.43 | 0.79 | 5.33 | **E33122J** |
| | 200 | 41 | 38 | 32 | 3 | 2.5 | **E30222J** | 3FB | 324000 | 434000 | 1900 | 2500 | 124 | 129 | 174 | 188 | 6 | 9 | 2.5 | 2 | 0.2 | 0.42 | 1.43 | 0.79 | 5.33 | **E30222J** |
| | 200 | 56 | 53 | 46 | 3 | 2.5 | **E32222J** | 3FC | 438000 | 640000 | 1900 | 2500 | 124 | 126 | 170 | 190 | 6 | 10 | 2.5 | 2 | 9.3 | 0.42 | 1.43 | 0.79 | 7.45 | **E32222J** |
| | 240 | 54.5 | 50 | 42 | 4 | 3 | **E30322J** | — | 481000 | 590000 | 1600 | 2100 | 128 | 141 | 206 | 222 | 8 | 12.5 | 3 | 2.5 | 8.2 | 0.35 | 1.74 | 0.96 | 11.4 | **E30322J** |
| | 240 | 54.5 | 50 | 36 | 4 | 3 | **30322D** | — | 365000 | 429000 | 1400 | 1900 | 128 | 135 | 205 | 222 | 6 | 18 | 3 | 2.5 | –17.0 | 0.81 | 0.74 | 0.41 | 10.2 | **30322D** |
| | 240 | 84.5 | 80 | 65 | 4 | 3 | **32322** | — | 607000 | 796000 | 1600 | 2200 | 128 | 137 | 198 | 222 | 9 | 19.5 | 3 | 2.5 | 27.2 | 0.35 | 1.73 | 0.95 | 16.6 | **32322** |

Note: (1) Minus value of load center "a" indicates that the center is located outside of cone backface.

# Tapered Roller Bearings

## Metric Series

Bore Diameter: 120～140mm

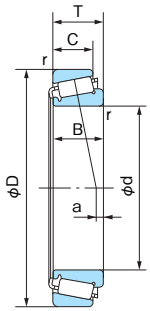


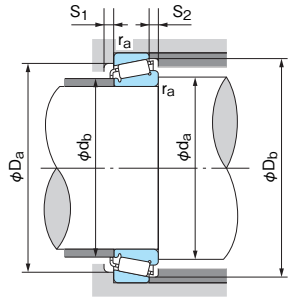


**■Dynamic equivalent radial load**

Pr=XFr+YFa

| $\frac{Fa}{Fr} \leqq e$ | | $\frac{Fa}{Fr} > e$ | |
|---|---|---|---|
| X | Y | X | Y |
| 1 | 0 | 0.4 | $Y_1$ |

Values e and $Y_1$ from table.

**■Static equivalent radial load**

Larger value of following to be used:

Por=0.5Fr+$Y_0$Fa

Por=Fr

Values $Y_0$ from table.

1N=0.102kgf

| Boundary dimensions (mm) | | | | | | | Bearing No. | (Ref.) ISO355 Dimension series | Basic dynamic load rating Cr (N) | Basic static load rating Cor (N) | Limiting speed (min-1) | | Abutment and fillet dimensions (mm) | | | | | | | | Load center (mm) a (1) | Constant e | Axial load factor | | Mass(kg) Reference | Bearing No. |
|---|---|---|---|---|---|---|---|---|---|---|---|---|---|---|---|---|---|---|---|---|---|---|---|---|---|---|
| d | D | T | B | C | Cone r (min) | Cup r (min) | | | | | Grease lubrication | Oil lubrication | da (min) | db (max) | Da (min) | Db (min) | $S_1$ (min) | $S_2$ (min) | Cone ra (max) | Cup ra (max) | | | $Y_1$ | $Y_0$ | | |
| 120 | 165 | 29 | 29 | 23 | 1.5 | 1.5 | **E32924J** | 2CC | 172000 | 298000 | 2100 | 2700 | 128.5 | 128 | 152 | 160 | 6 | 6 | 1.5 | 1.5 | –0.4 | 0.35 | 1.72 | 0.95 | 1.77 | **E32924J** |
| | 180 | 38 | 38 | 29 | 2.5 | 2 | **E32024J** | 4DC | 258000 | 427000 | 2000 | 2600 | 132 | 131 | 161 | 173 | 7 | 9 | 2 | 2 | –0.8 | 0.46 | 1.31 | 0.72 | 3.34 | **E32024J** |
| | 180 | 48 | 48 | 38 | 2.5 | 2 | **E33024J** | 2DE | 299000 | 540000 | 2000 | 2600 | 132 | 132 | 160 | 171 | 6 | 10 | 2 | 2 | 11.8 | 0.31 | 1.97 | 1.08 | 4.16 | **E33024J** |
| | 200 | 62 | 62 | 48 | 2.5 | 2 | **E33124J** | 3FE | 462000 | 785000 | 1800 | 2400 | 132 | 133 | 172 | 192 | 9 | 14 | 2 | 2 | 14.2 | 0.40 | 1.51 | 0.83 | 7.73 | **E33124J** |
| | 215 | 43.5 | 40 | 34 | 3 | 2.5 | **E30224J** | 4FE | 347000 | 473000 | 1700 | 2300 | 134 | 140 | 187 | 203 | 6 | 9.5 | 2.5 | 2 | –0.7 | 0.44 | 1.38 | 0.76 | 6.36 | **E30224J** |
| | 215 | 61.5 | 58 | 50 | 3 | 2.5 | **E32224J** | 4FD | 470000 | 691000 | 1700 | 2300 | 134 | 136 | 181 | 204 | 7 | 11.5 | 2.5 | 2 | 9.9 | 0.44 | 1.38 | 0.76 | 9.04 | **E32224J** |
| | 260 | 59.5 | 55 | 46 | 4 | 3 | **30324** | — | 505000 | 611000 | 1500 | 2000 | 138 | 152 | 221 | 239 | 10 | 13.5 | 3 | 2.5 | 10.6 | 0.35 | 1.73 | 0.96 | 13.7 | **30324** |
| | 260 | 59.5 | 55 | 37 | 4 | 3 | **30324D** | — | 430000 | 512000 | 1200 | 1700 | 138 | 145 | 219 | 239 | 6 | 21 | 3 | 2.5 | –18.3 | 0.81 | 0.74 | 0.41 | 13.0 | **30324D** |
| | 260 | 90.5 | 86 | 69 | 4 | 3 | **E32324J** | 2GD | 800000 | 1110000 | 1500 | 2000 | 138 | 148 | 213 | 239 | 9 | 21.5 | 3 | 2.5 | 27.8 | 0.35 | 1.74 | 0.96 | 22.2 | **E32324J** |
| | 260 | 68 | 62 | 42 | 4 | 3 | **E31324J** | 7GB | 526000 | 665000 | 1300 | 1800 | 138 | 145 | 221 | 244 | 6 | 21 | 3 | 2.5 | –13.9 | 0.83 | 0.73 | 0.40 | 15.4 | **E31324J** |
| 130 | 180 | 32 | 32 | 25 | 2 | 1.5 | **E32926J** | 2CC | 200000 | 368000 | 1900 | 2500 | 140 | 141 | 165 | 174 | 6 | 7 | 2 | 1.5 | 0.6 | 0.34 | 1.77 | 0.97 | 2.42 | **E32926J** |
| | 200 | 45 | 45 | 34 | 2.5 | 2 | **E32026J** | 4EC | 340000 | 563000 | 1800 | 2300 | 142 | 144 | 178 | 192 | 8 | 11 | 2 | 2 | 2.1 | 0.43 | 1.38 | 0.76 | 5.04 | **E32026J** |
| | 200 | 55 | 55 | 43 | 2.5 | 2 | **E33026J** | 2EE | 390000 | 705000 | 1700 | 2300 | 142 | 143 | 178 | 192 | 8 | 12 | 2 | 2 | 12.5 | 0.34 | 1.76 | 0.97 | 6.19 | **E33026J** |
| | 230 | 43.75 | 40 | 34 | 4 | 3 | **E30226J** | 4FB | 377000 | 511000 | 1600 | 2100 | 148 | 152 | 203 | 218 | 7 | 9.5 | 3 | 2.5 | –2.7 | 0.44 | 1.38 | 0.76 | 7.24 | **E30226J** |
| | 230 | 67.75 | 64 | 54 | 4 | 3 | **E32226J** | 4FD | 554000 | 830000 | 1600 | 2200 | 148 | 146 | 193 | 219 | 7 | 13.5 | 3 | 2.5 | 11.7 | 0.44 | 1.38 | 0.76 | 11.5 | **E32226J** |
| | 280 | 63.75 | 58 | 41 | 5 | 4 | **E30326D** | — | 536000 | 665000 | 1200 | 1600 | 152 | 155 | 240 | 261 | 7 | 22 | 4 | 3 | –20.2 | 0.81 | 0.74 | 0.41 | 16.4 | **E30326D** |
| | 280 | 63.75 | 58 | 49 | 5 | 4 | **30326** | — | 563000 | 684000 | 1400 | 1800 | 152 | 164 | 239 | 255 | 8 | 14.5 | 4 | 3 | 10.9 | 0.35 | 1.73 | 0.95 | 16.9 | **30326** |
| | 280 | 98.75 | 93 | 78 | 5 | 4 | **32326** | — | 852000 | 1160000 | 1400 | 1800 | 152 | 163 | 226 | 259 | 10 | 15 | 4 | 3 | 29.6 | 0.35 | 1.73 | 0.95 | 26.5 | **32326** |
| | 280 | 72 | 66 | 44 | 5 | 4 | **E31326J** | 7GB | 589000 | 748000 | 1200 | 1600 | 152 | 155 | 236 | 261 | 7 | 23 | 4 | 3 | –15.3 | 0.83 | 0.73 | 0.40 | 18.9 | **E31326J** |
| 140 | 190 | 32 | 32 | 25 | 2 | 1.5 | **E32928J** | 2CC | 206000 | 390000 | 1800 | 2300 | 150 | 150 | 174 | 184 | 6 | 7 | 2 | 1.5 | –1.6 | 0.36 | 1.67 | 0.92 | 2.57 | **E32928J** |
| | 210 | 45 | 45 | 34 | 2.5 | 2 | **E32028J** | 4DC | 346000 | 585000 | 1700 | 2200 | 152 | 153 | 187 | 202 | 8 | 11 | 2 | 2 | –0.6 | 0.46 | 1.31 | 0.72 | 5.28 | **E32028J** |
| | 210 | 56 | 56 | 44 | 2.5 | 2 | **E33028J** | 2DE | 406000 | 758000 | 1600 | 2200 | 152 | 152 | 186 | 202 | 7 | 12 | 2 | 2 | 10.4 | 0.36 | 1.67 | 0.92 | 6.61 | **E33028J** |
| | 250 | 45.75 | 42 | 36 | 4 | 3 | **E30228** | — | 405000 | 538000 | 1500 | 1900 | 158 | 163 | 219 | 237 | 9 | 9.5 | 3 | 2.5 | –3.4 | 0.43 | 1.39 | 0.77 | 8.9 | **E30228** |
| | 250 | 71.75 | 68 | 58 | 4 | 3 | **E32228J** | 4FD | 636000 | 961000 | 1500 | 2000 | 158 | 158 | 210 | 238 | 9 | 13.5 | 3 | 2.5 | 11.7 | 0.44 | 1.39 | 0.76 | 14.7 | **E32228J** |
| | 300 | 67.75 | 62 | 44 | 5 | 4 | **30328D** | — | 525000 | 627000 | 1100 | 1500 | 162 | 169 | 254 | 280 | 7 | 23 | 4 | 3 | –22.4 | 0.81 | 0.74 | 0.41 | 20.0 | **30328D** |
| | 300 | 67.75 | 62 | 53 | 5 | 4 | **30328** | — | 626000 | 761000 | 1300 | 1700 | 162 | 179 | 254 | 273 | 10 | 14.5 | 4 | 3 | 12.2 | 0.35 | 1.73 | 0.95 | 20.4 | **30328** |
| | 300 | 107.75 | 102 | 85 | 5 | 4 | **32328** | — | 958000 | 1320000 | 1300 | 1700 | 162 | 175 | 246 | 280 | 10 | 17 | 4 | 3 | 34.1 | 0.35 | 1.73 | 0.95 | 33.5 | **32328** |
| | 300 | 77 | 70 | 47 | 5 | 4 | **E31328J** | 7GB | 674000 | 865000 | 1100 | 1500 | 162 | 167 | 254 | 280 | 8 | 26 | 4 | 3 | –16.8 | 0.83 | 0.73 | 0.40 | 23.3 | **E31328J** |

Note: (1) Minus value of load center "a" indicates that the center is located outside of cone backface.

# Tapered Roller Bearings

## Metric Series

Bore Diameter: 150～180mm

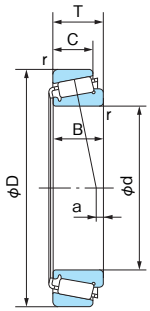


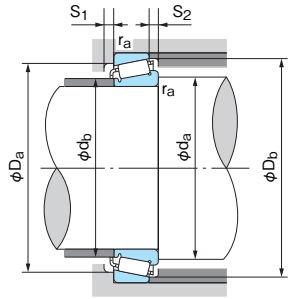


**■Dynamic equivalent radial load**

Pr=XFr+YFa

| $\frac{Fa}{Fr} \leqq e$ | | $\frac{Fa}{Fr} > e$ | |
|---|---|---|---|
| X | Y | X | Y |
| 1 | 0 | 0.4 | $Y_1$ |

Values e and $Y_1$ from table.

**■Static equivalent radial load**

Larger value of following to be used:

Por=0.5Fr+$Y_0$Fa

Por=Fr

Values $Y_0$ from table.

1N=0.102kgf

| Boundary dimensions (mm) | | | | | | | Bearing No. | (Ref.) ISO355 Dimension series | Basic dynamic load rating Cr (N) | Basic static load rating Cor (N) | Limiting speed (min-1) | | Abutment and fillet dimensions (mm) | | | | | | | | Load center (mm) a (1) | Constant e | Axial load factor | | Mass(kg) Reference | Bearing No. |
|---|---|---|---|---|---|---|---|---|---|---|---|---|---|---|---|---|---|---|---|---|---|---|---|---|---|---|
| d | D | T | B | C | Cone r (min) | Cup r (min) | | | | | Grease lubrication | Oil lubrication | da (min) | db (max) | Da (min) | Db (min) | S1 (min) | S2 (min) | Cone ra (max) | Cup ra (max) | | | Y1 | Y0 | | |
| 150 | 210 | 38 | 38 | 30 | 2.5 | 2 | **E32930J** | 2DC | 286000 | 536000 | 1600 | 2100 | 162 | 163 | 194 | 202 | 7 | 8 | 2 | 2 | 1.9 | 0.33 | 1.83 | 1.01 | 3.96 | **E32930J** |
| | 225 | 48 | 48 | 36 | 3 | 2.5 | **E32030J** | 4EC | 391000 | 668000 | 1500 | 2000 | 164 | 164 | 200 | 216 | 8 | 12 | 2.5 | 2 | –0.8 | 0.46 | 1.31 | 0.72 | 6.41 | **E32030J** |
| | 270 | 49 | 45 | 38 | 4 | 3 | **E30230** | — | 466000 | 625000 | 1300 | 1800 | 168 | 175 | 234 | 255 | 9 | 11 | 3 | 2.5 | –2.7 | 0.43 | 1.39 | 0.77 | 10.9 | **E30230** |
| | 270 | 77 | 73 | 60 | 4 | 3 | **E32230J** | 4GD | 704000 | 1070000 | 1300 | 1800 | 168 | 170 | 226 | 254 | 8 | 17 | 3 | 2.5 | 11.8 | 0.44 | 1.38 | 0.76 | 18.2 | **E32230J** |
| | 320 | 72 | 65 | 46 | 5 | 4 | **30330D** | — | 616000 | 750000 | 970 | 1400 | 172 | 183 | 270 | 301 | 9 | 26 | 4 | 3 | –24.0 | 0.81 | 0.74 | 0.41 | 23.9 | **30330D** |
| | 320 | 72 | 65 | 55 | 5 | 4 | **30330** | — | 717000 | 962000 | 1200 | 1500 | 172 | 193 | 272 | 292 | 12 | 17 | 4 | 3 | 10.2 | 0.35 | 1.73 | 0.95 | 25.4 | **30330** |
| | 320 | 114 | 108 | 90 | 5 | 4 | **E32330** | — | 1240000 | 1790000 | 1200 | 1600 | 172 | 187 | 263 | 298 | 10 | 17 | 4 | 3 | 35.6 | 0.35 | 1.74 | 0.96 | 42.0 | **E32330** |
| 160 | 220 | 38 | 38 | 30 | 2.5 | 2 | **E32932J** | 2DC | 295000 | 568000 | 1500 | 2000 | 172 | 173 | 204 | 212 | 7 | 8 | 2 | 2 | –0.4 | 0.35 | 1.73 | 0.95 | 4.19 | **E32932J** |
| | 240 | 51 | 51 | 38 | 3 | 2.5 | **E32032J** | 4EC | 440000 | 758000 | 1400 | 1900 | 174 | 175 | 213 | 231 | 8 | 13 | 2.5 | 2 | –1.1 | 0.46 | 1.31 | 0.72 | 7.75 | **E32032J** |
| | 290 | 52 | 48 | 40 | 4 | 3 | **30232** | — | 483000 | 637000 | 1200 | 1600 | 178 | 189 | 252 | 269 | 8 | 12 | 3 | 2.5 | –5.4 | 0.46 | 1.31 | 0.72 | 13.3 | **30232** |
| | 290 | 84 | 80 | 67 | 4 | 3 | **E32232J** | 4GD | 795000 | 1210000 | 1200 | 1700 | 178 | 182 | 242 | 274 | 10 | 17 | 3 | 2.5 | 13.7 | 0.44 | 1.38 | 0.76 | 23.2 | **E32232J** |
| | 340 | 75 | 68 | 48 | 5 | 4 | **30332D** | — | 742000 | 933000 | 900 | 1300 | 182 | 195 | 290 | 320 | 9 | 27 | 4 | 3 | –26.8 | 0.81 | 0.74 | 0.41 | 29.1 | **30332D** |
| | 340 | 75 | 68 | 58 | 5 | 4 | **30332** | — | 793000 | 981000 | 1100 | 1400 | 182 | 205 | 289 | 310 | 12 | 17 | 4 | 3 | 11.5 | 0.35 | 1.73 | 0.95 | 28.7 | **30332** |
| | 340 | 121 | 114 | 95 | 5 | 4 | **32332** | — | 1220000 | 1720000 | 1100 | 1400 | 182 | 200 | 277 | 316 | 10 | 18 | 4 | 3 | 38 | 0.35 | 1.73 | 0.95 | 47.9 | **32332** |
| 170 | 230 | 38 | 38 | 34 | 2.5 | 2 | **E32934J** | 3DC | 296000 | 606000 | 1400 | 1900 | 182 | 183 | 213 | 222 | 7 | 8 | 2 | 2 | –4.0 | 0.38 | 1.57 | 0.86 | 4.49 | **E32934J** |
| | 260 | 57 | 57 | 43 | 3 | 2.5 | **E32034J** | 4EC | 526000 | 905000 | 1300 | 1700 | 184 | 187 | 230 | 249 | 10 | 14 | 2.5 | 2 | 1.2 | 0.44 | 1.35 | 0.74 | 10.5 | **E32034J** |
| | 310 | 57 | 52 | 43 | 5 | 4 | **30234** | — | 544000 | 726000 | 1100 | 1500 | 192 | 202 | 269 | 288 | 8 | 4 | 4 | 3 | –4.8 | 0.46 | 1.31 | 0.72 | 16.5 | **30234** |
| | 310 | 91 | 86 | 71 | 5 | 4 | **E32234J** | 4GD | 1000000 | 1610000 | 1100 | 1500 | 192 | 195 | 259 | 294 | 11 | 20 | 4 | 3 | 16.1 | 0.44 | 1.38 | 0.76 | 28.8 | **E32234J** |
| | 360 | 80 | 72 | 50 | 5 | 4 | **30334D** | — | 762000 | 1040000 | 830 | 1200 | 192 | 211 | 310 | 333 | 9 | 30 | 4 | 3 | –28.3 | 0.81 | 0.74 | 0.41 | 34.3 | **30334D** |
| | 360 | 80 | 72 | 62 | 5 | 4 | **30334** | — | 828000 | 1020000 | 1000 | 1300 | 192 | 218 | 306 | 329 | 13 | 18 | 4 | 3 | 12.3 | 0.35 | 1.73 | 0.95 | 33.0 | **30334** |
| | 360 | 127 | 120 | 100 | 5 | 4 | **32334** | — | 1310000 | 1830000 | 1000 | 1300 | 192 | 200 | 295 | 337 | 14 | 26 | 4 | 3 | 40.9 | 0.35 | 1.73 | 0.95 | 55.8 | **32334** |
| 180 | 250 | 45 | 45 | 34 | 2.5 | 2 | **E32936J** | 4DC | 357000 | 735000 | 1300 | 1700 | 192 | 193 | 225 | 241 | 8 | 11 | 2 | 2 | –8.5 | 0.48 | 1.25 | 0.69 | 6.64 | **E32936J** |
| | 280 | 64 | 64 | 48 | 3 | 2.5 | **E32036J** | 4EC | 644000 | 1100000 | 1200 | 1600 | 194 | 199 | 247 | 268 | 10 | 16 | 2.5 | 2 | 4.5 | 0.42 | 1.42 | 0.78 | 14.1 | **E32036J** |
| | 320 | 57 | 52 | 43 | 5 | 4 | **E30236J** | 4GB | 615000 | 870000 | 1100 | 1400 | 202 | 211 | 278 | 297 | 9 | 14 | 4 | 3 | –6.6 | 0.45 | 1.33 | 0.73 | 18.3 | **E30236J** |
| | 320 | 91 | 86 | 71 | 5 | 4 | **E32236J** | 4GD | 957000 | 1520000 | 1100 | 1500 | 202 | 204 | 267 | 303 | 10 | 20 | 4 | 3 | 13.2 | 0.45 | 1.33 | 0.73 | 29.9 | **E32236J** |
| | 380 | 83 | 75 | 52 | 5 | 4 | **30336D** | — | 833000 | 1150000 | 780 | 1100 | 202 | 225 | 330 | 351 | 10 | 31 | 4 | 3 | –29.8 | 0.81 | 0.74 | 0.41 | 40.1 | **30336D** |
| | 380 | 83 | 75 | 64 | 5 | 4 | **30336** | — | 901000 | 1110000 | 940 | 1300 | 202 | 227 | 318 | 346 | 13 | 19 | 4 | 3 | 12 | 0.35 | 1.73 | 0.95 | 39.7 | **30336** |
| | 380 | 134 | 126 | 105 | 5 | 4 | **32336** | — | 1410000 | 1980000 | 960 | 1300 | 202 | 215 | 310 | 355 | 14 | 27 | 4 | 3 | 42.2 | 0.35 | 1.73 | 0.95 | 67.0 | **32336** |

Note: (1) Minus value of load center "a" indicates that the center is located outside of cone backface.

# ■ Tapered Roller Bearings

## Metric Series

Bore Diameter: 190～260mm

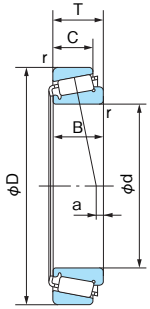


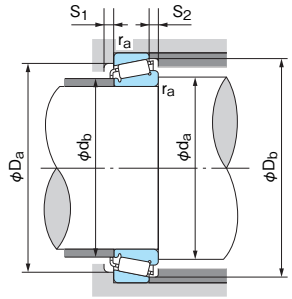


**■Dynamic equivalent radial load**

Pr=XFr+YFa

| $\frac{Fa}{Fr} \leqq e$ | | $\frac{Fa}{Fr} > e$ | |
|---|---|---|---|
| X | Y | X | Y |
| 1 | 0 | 0.4 | $Y_1$ |

Values e and $Y_1$ from table.

**■Static equivalent radial load**

Larger value of following to be used:

$P_{or}=0.5F_r+Y_0F_a$

$P_{or}=F_r$

Values $Y_0$ from table.

1N=0.102kgf

| Boundary dimensions (mm) | | | | | | | Bearing No. | (Ref.) ISO355 Dimension series | Basic dynamic load rating Cr (N) | Basic static load rating Cor (N) | Limiting speed (min⁻¹) | | Abutment and fillet dimensions (mm) | | | | | | | | Load center (mm) a (1) | Constant e | Axial load factor | | Mass(kg) Reference | Bearing No. |
|---|---|---|---|---|---|---|---|---|---|---|---|---|---|---|---|---|---|---|---|---|---|---|---|---|---|---|
| d | D | T | B | C | Cone r (min) | Cup r (min) | | | | | Grease lubrication | Oil lubrication | da (min) | db (max) | Da (min) | Db (min) | S1 (min) | S2 (min) | Cone ra (max) | Cup ra (max) | | | Y1 | Y0 | | |
| 190 | 260 | 45 | 45 | 34 | 2.5 | 2 | **E32938J** | 4DC | 366000 | 789000 | 1200 | 1600 | 202 | 204 | 235 | 252 | 8 | 11 | 2 | 2 | –10.0 | 0.48 | 1.26 | 0.69 | 6.89 | **E32938J** |
| | 290 | 64 | 64 | 48 | 3 | 2.5 | **E32038J** | 4FD | 654000 | 1170000 | 1100 | 1500 | 204 | 209 | 257 | 279 | 10 | 16 | 2.5 | 2 | 1.1 | 0.44 | 1.36 | 0.75 | 14.7 | **E32038J** |
| | 340 | 60 | 55 | 46 | 5 | 4 | **E30238J** | 4GB | 729000 | 1030000 | 1000 | 1400 | 212 | 225 | 298 | 318 | 12 | 13 | 4 | 3 | –6.4 | 0.44 | 1.38 | 0.76 | 21.9 | **E30238J** |
| | 340 | 97 | 92 | 75 | 5 | 4 | **E32238J** | 4GD | 1090000 | 1740000 | 1000 | 1400 | 208 | 216 | 290 | 330 | 6 | 12 | 4 | 3 | 15 | 0.46 | 1.31 | 0.72 | 33.9 | **E32238J** |
| | 400 | 86 | 78 | 52 | 6 | 5 | **30338D** | — | 950000 | 1210000 | 740 | 1000 | 218 | 232 | 350 | 372 | 11 | 34 | 5 | 4 | –33.2 | 0.81 | 0.74 | 0.41 | 44.8 | **30338D** |
| | 400 | 86 | 78 | 65 | 5 | 5 | **30338** | — | 1010000 | 1250000 | 880 | 1200 | 218 | 241 | 342 | 370 | 10 | 20 | 5 | 4 | 12.8 | 0.35 | 1.73 | 0.95 | 46.2 | **30338** |
| | 400 | 140 | 132 | 109 | 5 | 5 | **32338** | — | 1550000 | 2190000 | 890 | 1200 | 218 | 225 | 330 | 375 | 14 | 30 | 5 | 4 | 43.5 | 0.35 | 1.73 | 0.95 | 76.6 | **32338** |
| 200 | 280 | 51 | 51 | 39 | 3 | 2.5 | **E32940J** | 3EC | 486000 | 958000 | 1100 | 1500 | 214 | 216 | 257 | 271 | 9 | 12 | 2.5 | 2 | –2.6 | 0.39 | 1.52 | 0.84 | 9.44 | **E32940J** |
| | 310 | 70 | 70 | 53 | 3 | 2.5 | **E32040J** | 4FD | 755000 | 1340000 | 1100 | 1400 | 214 | 221 | 273 | 297 | 11 | 17 | 2.5 | 2 | 3.1 | 0.43 | 1.39 | 0.77 | 19.1 | **E32040J** |
| | 360 | 64 | 58 | 48 | 5 | 4 | **E30240J** | 4GB | 792000 | 1120000 | 940 | 1200 | 222 | 238 | 315 | 336 | 12 | 15 | 4 | 3 | –6.3 | 0.44 | 1.38 | 0.76 | 26.4 | **E30240J** |
| | 360 | 104 | 98 | 82 | 5 | 4 | **E32240J** | 4GD | 1240000 | 1880000 | 960 | 1300 | 222 | 225 | 302 | 340 | 11 | 22 | 4 | 3 | 19.4 | 0.41 | 1.48 | 0.81 | 44.2 | **E32240J** |
| | 420 | 89 | 80 | 56 | 6 | 5 | **30340D** | — | 904000 | 1230000 | 690 | 970 | 228 | 248 | 365 | 385 | 11 | 33 | 5 | 4 | –33.6 | 0.81 | 0.74 | 0.41 | 50.6 | **30340D** |
| | 420 | 89 | 80 | 67 | 5 | 5 | **30340** | — | 1120000 | 1450000 | 820 | 1100 | 228 | 255 | 354 | 385 | 11 | 21 | 5 | 4 | 9.2 | 0.35 | 1.73 | 0.95 | 53.5 | **30340** |
| | 420 | 146 | 138 | 115 | 5 | 5 | **32340** | — | 1790000 | 2580000 | 830 | 1100 | 228 | 240 | 345 | 395 | 16 | 30 | 5 | 4 | 43.1 | 0.35 | 1.73 | 0.95 | 91.0 | **32340** |
| 220 | 300 | 51 | 51 | 39 | 3 | 2.5 | **E32944J** | 3EC | 498000 | 1010000 | 1000 | 1400 | 234 | 234 | 275 | 290 | 9 | 12 | 2.5 | 2 | –7.6 | 0.43 | 1.41 | 0.78 | 10.1 | **E32944J** |
| | 340 | 76 | 76 | 57 | 4 | 3 | **E32044J** | 4FD | 894000 | 1620000 | 940 | 1300 | 238 | 243 | 300 | 326 | 12 | 19 | 3 | 2.5 | 3.2 | 0.43 | 1.39 | 0.77 | 25.2 | **E32044J** |
| | 400 | 72 | 65 | 54 | 5 | 4 | **E30244J** | — | 1010000 | 1440000 | 830 | 1100 | 242 | 263 | 344 | 371 | 14 | 17 | 4 | 3 | –4.5 | 0.44 | 1.43 | 0.79 | 35.9 | **E30244J** |
| | 400 | 114 | 108 | 90 | 5 | 4 | **32244** | — | 1190000 | 1930000 | 830 | 1100 | 242 | 260 | 333 | 377 | 16 | 14 | 4 | 3 | 18.1 | 0.43 | 1.39 | 0.77 | 56.8 | **32244** |
| | 460 | 97 | 88 | 73 | 5 | 5 | **30344** | — | 1260000 | 1680000 | 730 | 980 | 248 | 282 | 386 | 420 | 12 | 23 | 5 | 4 | 12.4 | 0.35 | 1.73 | 0.95 | 69.0 | **30344** |
| | 460 | 154 | 145 | 122 | 5 | 5 | **32344** | — | 2100000 | 3170000 | 750 | 1000 | 242 | 267 | 375 | 423 | 10 | 18 | 5 | 4 | 43 | 0.35 | 1.73 | 0.95 | 108 | **32344** |
| 240 | 320 | 51 | 51 | 39 | 3 | 2.5 | **E32948J** | 4EC | 515000 | 1090000 | 940 | 1300 | 254 | 254 | 294 | 311 | 9 | 12 | 2.5 | 2 | –13.5 | 0.46 | 1.31 | 0.72 | 10.9 | **E32948J** |
| | 360 | 76 | 76 | 57 | 4 | 3 | **E32048J** | 4FD | 924000 | 1720000 | 870 | 1300 | 258 | 261 | 318 | 346 | 12 | 19 | 3 | 2.5 | –2.5 | 0.46 | 1.31 | 0.72 | 26.8 | **E32048J** |
| | 440 | 79 | 72 | 60 | 5 | 4 | **E30248** | — | 1230000 | 1790000 | 730 | 980 | 262 | 287 | 377 | 409 | 14 | 18 | 4 | 3 | –3.7 | 0.42 | 1.43 | 0.79 | 49.5 | **E30248** |
| | 440 | 127 | 120 | 100 | 5 | 4 | **E32248** | — | 1830000 | 3010000 | 740 | 980 | 262 | 282 | 365 | 415 | 16 | 14 | 4 | 3 | 22 | 0.44 | 1.38 | 0.76 | 80 | **E32248** |
| | 500 | 105 | 95 | 80 | 5 | 5 | **30348** | — | 1520000 | 2100000 | 670 | 890 | 268 | 308 | 414 | 445 | 16 | 21 | 5 | 4 | 13.3 | 0.35 | 1.73 | 0.95 | 87.3 | **30348** |
| | 500 | 165 | 155 | 132 | 5 | 5 | **32348** | — | 2510000 | 3870000 | 670 | 890 | 268 | 298 | 413 | 461 | 16 | 20 | 5 | 4 | 47.6 | 0.35 | 1.73 | 0.95 | 144 | **32348** |
| 260 | 360 | 63.5 | 63.5 | 48 | 3 | 2.5 | **E32952J** | — | 741000 | 1550000 | 830 | 1100 | 274 | 279 | 328 | 347 | 11 | 15.5 | 2.5 | 2 | –6.1 | 0.41 | 1.48 | 0.81 | 18.9 | **E32952J** |
| | 400 | 87 | 87 | 65 | 5 | 4 | **E32052J** | — | 1170000 | 2170000 | 770 | 1000 | 282 | 287 | 352 | 383 | 14 | 22 | 4 | 3 | 2.0 | 0.43 | 1.38 | 0.76 | 39.5 | **E32052J** |
| | 480 | 89 | 80 | 67 | 6 | 5 | **30252** | — | 1210000 | 1860000 | 650 | 870 | 288 | 310 | 415 | 450 | 14 | 21 | 5 | 4 | –4.6 | 0.42 | 1.44 | 0.79 | 64.9 | **30252** |
| | 480 | 137 | 130 | 106 | 6 | 5 | **32252** | — | 1760000 | 2870000 | 660 | 880 | 288 | 300 | 400 | 455 | 16 | 30 | 5 | 4 | 21.8 | 0.43 | 1.39 | 0.77 | 102 | **32252** |

Note: (1) Minus value of load center "a" indicates that the center is located outside of cone backface.

# Tapered Roller Bearings

## Metric Series

Bore Diameter: 280～320mm

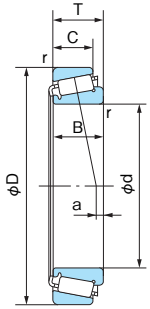


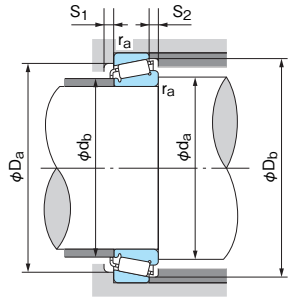


**■Dynamic equivalent radial load**

Pr=XFr+YFa

| $\frac{Fa}{Fr} \leqq e$ | | $\frac{Fa}{Fr} > e$ | |
|---|---|---|---|
| X | Y | X | Y |
| 1 | 0 | 0.4 | $Y_1$ |

Values e and $Y_1$ from table.

**■Static equivalent radial load**

Larger value of following to be used:

$P_{or}=0.5F_r+Y_0F_a$

$P_{or}=F_r$

Values $Y_0$ from table.

1N=0.102kgf

| Boundary dimensions (mm) | | | | | | | Bearing No. | (Ref.) ISO355 Dimension series | Basic dynamic load rating Cr (N) | Basic static load rating Cor (N) | Limiting speed (min⁻¹) | | Abutment and fillet dimensions (mm) | | | | | | | | Load center (mm) a (1) | Constant e | Axial load factor | | Mass(kg) Reference | Bearing No. |
|---|---|---|---|---|---|---|---|---|---|---|---|---|---|---|---|---|---|---|---|---|---|---|---|---|---|---|
| d | D | T | B | C | Cone r (min) | Cup r (min) | | | | | Grease lubrication | Oil lubrication | da (min) | db (max) | Da (min) | Db (min) | S1 (min) | S2 (min) | Cone ra (max) | Cup ra (max) | | | Y1 | Y0 | | |
| 280 | 380 | 63.5 | 63.5 | 48 | 3 | 2.5 | **E32956J** | 4EC | 760000 | 1630000 | 770 | 1000 | 294 | 298 | 347 | 368 | 11 | 15.5 | 2.5 | 2 | –11.6 | 0.43 | 1.39 | 0.76 | 20.1 | **E32956J** |
| | 420 | 87 | 87 | 65 | 5 | 4 | **E32056J** | 4FC | 1200000 | 2280000 | 720 | 960 | 302 | 305 | 370 | 405 | 14 | 22 | 4 | 3 | –4.1 | 0.46 | 1.31 | 0.72 | 41.7 | **E32056J** |
| | 500 | 89 | 80 | 67 | 6 | 5 | **30256** | — | 1260000 | 1920000 | 610 | 810 | 308 | 325 | 440 | 475 | 14 | 21 | 5 | 4 | –7.2 | 0.42 | 1.44 | 0.79 | 67.6 | **30256** |
| | 500 | 137 | 130 | 106 | 6 | 5 | **32256** | — | 1860000 | 3150000 | 610 | 810 | 308 | 325 | 420 | 474 | 16 | 30 | 5 | 4 | 19.8 | 0.43 | 1.39 | 0.77 | 108.0 | **32256** |
| 300 | 420 | 76 | 76 | 57 | 4 | 3 | **E32960J** | 3FD | 1050000 | 2210000 | 680 | 910 | 318 | 324 | 383 | 405 | 12 | 19 | 3 | 2.5 | –3.9 | 0.39 | 1.52 | 0.84 | 32.4 | **E32960J** |
| | 460 | 100 | 100 | 74 | 5 | 4 | **E32060J** | 4GD | 1430000 | 2660000 | 640 | 850 | 322 | 329 | 404 | 439 | 15 | 26 | 4 | 3 | 2.1 | 0.43 | 1.38 | 0.76 | 57.5 | **E32060J** |
| | 540 | 96 | 85 | 71 | 6 | 5 | **30260** | — | 1510000 | 2360000 | 550 | 730 | 328 | 350 | 475 | 505 | 14 | 24 | 5 | 4 | –7.9 | 0.42 | 1.44 | 0.79 | 84.7 | **30260** |
| | 540 | 149 | 140 | 115 | 6 | 5 | **32260** | — | 2310000 | 4060000 | 570 | 780 | 322 | 343 | 456 | 510 | 6 | 15 | 5 | 4 | 17 | 0.47 | 1.27 | 0.70 | 132 | **32260** |
| 320 | 440 | 76 | 76 | 57 | 4 | 3 | **E32964J** | 3FD | 1060000 | 2270000 | 640 | 850 | 338 | 342 | 401 | 426 | 12 | 19 | 3 | 2.5 | –9.0 | 0.42 | 1.44 | 0.79 | 34.0 | **E32964J** |
| | 480 | 100 | 100 | 74 | 5 | 4 | **E32064J** | 4GD | 1510000 | 2810000 | 600 | 800 | 342 | 344 | 418 | 461 | 16 | 26 | 4 | 3 | –3.0 | 0.46 | 1.31 | 0.72 | 58.7 | **E32064J** |
| | 580 | 104 | 92 | 75 | 6 | 5 | **30264** | — | 1740000 | 2770000 | 490 | 660 | 348 | 370 | 505 | 540 | 14 | 28 | 5 | 4 | –7.9 | 0.42 | 1.44 | 0.79 | 108 | **30264** |

Note: (1) Minus value of load center "a" indicates that the center is located outside of cone backface.

# Tapered Roller Bearings

## Inch Series

Bore Diameter: 15.875～30.163mm

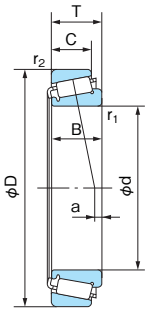


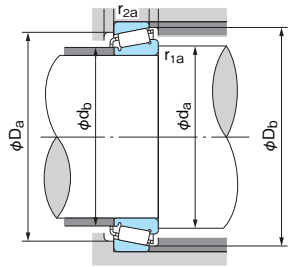


**■Dynamic equivalent radial load**

Pr=XFr+YFa

| $\frac{Fa}{Fr} \leqq e$ | | $\frac{Fa}{Fr} > e$ | |
|---|---|---|---|
| X | Y | X | Y |
| 1 | 0 | 0.4 | $Y_1$ |

Values e and $Y_1$ from table.

**■Static equivalent radial load**

Larger value of following to be used:

Por=0.5Fr+$Y_0$Fa

Por=Fr

Values $Y_0$ from table.

1N=0.102kgf

| Boundary dimensions (mm) | | | | | | | Bearing No. | | Basic load rating | | Limiting speed ($min^{-1}$) | | Abutment and fillet dimensions (mm) | | | | | | Load center (mm) a (1) | Constant e | Axial load factor | | Mass(kg) Reference | | Bearing No. | |
|---|---|---|---|---|---|---|---|---|---|---|---|---|---|---|---|---|---|---|---|---|---|---|---|---|---|---|
| d | D | T | B | C | $r_1$ (min) | $r_2$ (min) | Cone | Cup | Cr (kN) | Cor (kN) | Grease | Oil | da | db | Da | Db | $r_{1a}$ | $r_{2a}$ | | | $Y_1$ | $Y_0$ | Cone | Cup | Cone | Cup |
| **15.875** | 42.863 | 14.288 | 14.288 | 9.525 | 1.60 | 1.60 | **H-11590** | **H-11520** | 17.8 | 17.7 | 10000 | 14000 | 24.5 | 22.5 | 34.5 | 39.5 | 1.60 | 1.60 | 1.2 | 0.70 | 0.85 | 0.47 | 0.06 | 0.04 | **H-11590** | **H-11520** |
| **17.463** | 39.878 | 13.843 | 14.605 | 10.668 | 1.20 | 1.20 | **H-LM11749R** | **H-LM11710** | 25.4 | 26.0 | 11000 | 14000 | 23.0 | 21.5 | 34.0 | 37.0 | 1.20 | 1.20 | 5.2 | 0.29 | 2.10 | 1.15 | 0.058 | 0.028 | **H-LM11749R** | **H-LM11710** |
| **19.050** | 45.237 | 15.494 | 16.637 | 12.065 | 1.20 | 1.20 | **H-LM11949** | **H-LM11910** | 29.4 | 30.1 | 9400 | 13000 | 25.0 | 23.5 | 39.5 | 41.5 | 1.20 | 1.20 | 5.5 | 0.30 | 2.00 | 1.10 | 0.081 | 0.044 | **H-LM11949** | **H-LM11910** |
| | 49.225 | 18.034 | 19.050 | 14.288 | 1.20 | 1.20 | **H-09067** | **H-09195** | 37.7 | 37.7 | 8900 | 12000 | 25.5 | 24.0 | 42.0 | 44.5 | 1.20 | 1.20 | 7.4 | 0.27 | 2.26 | 1.24 | 0.114 | 0.065 | **H-09067** | **H-09195** |
| | 53.975 | 22.225 | 21.839 | 15.875 | 1.57 | 2.36 | **H-21075** | **H-21212** | 42 | 41.2 | 8400 | 11000 | 31.5 | 26.0 | 43.0 | 50.0 | 1.57 | 2.36 | 5.6 | 0.59 | 1.02 | 0.56 | 0.159 | 0.095 | **H-21075** | **H-21212** |
| **21.430** | 50.005 | 17.526 | 18.288 | 13.970 | 1.17 | 1.17 | **H-M12649** | **H-M12610** | 39.1 | 40.7 | 8500 | 11000 | 27.5 | 25.5 | 44.0 | 46.0 | 1.17 | 1.17 | 6.4 | 0.28 | 2.16 | 1.19 | 0.119 | 0.058 | **H-M12649** | **H-M12610** |
| **21.987** | 45.237 | 15.494 | 16.637 | 12.065 | 1.27 | 1.27 | **H-LM12749** | **H-LM12710** | 30.1 | 34.6 | 8900 | 12000 | 27.5 | 26.0 | 39.5 | 42.0 | 1.27 | 1.27 | 5.5 | 0.31 | 1.96 | 1.08 | 0.078 | 0.038 | **H-LM12749** | **H-LM12710** |
| | 45.975 | 15.494 | 16.637 | 12.065 | 1.27 | 1.27 | **H-LM12749** | **H-LM12711** | 30.1 | 34.6 | 8900 | 12000 | 27.5 | 26.0 | 40.0 | 42.5 | 1.27 | 1.27 | 5.5 | 0.31 | 1.96 | 1.08 | 0.078 | 0.043 | **H-LM12749** | **H-LM12711** |
| **22.225** | 52.388 | 19.368 | 20.168 | 14.288 | 1.60 | 1.60 | **H-1380** | **H-1328** | 36.7 | 37.9 | 8000 | 11000 | 29.5 | 29.5 | 45.0 | 48.5 | 1.60 | 1.60 | 7.7 | 0.29 | 2.05 | 1.13 | 0.132 | 0.066 | **H-1380** | **H-1328** |
| | 56.896 | 19.368 | 19.837 | 15.875 | 1.20 | 1.20 | **H-1755** | **H-1729** | 40.0 | 43.1 | 7600 | 10000 | 29.0 | 27.5 | 49.0 | 51.0 | 1.20 | 1.20 | 7.1 | 0.31 | 1.95 | 1.07 | 0.150 | 0.100 | **H-1755** | **H-1729** |
| | 57.150 | 22.225 | 22.225 | 17.463 | 0.80 | 1.60 | **H-1280** | **H-1220** | 52.6 | 55.7 | 7600 | 10000 | 29.5 | 29.0 | 49.0 | 52.0 | 0.80 | 1.60 | 7.9 | 0.35 | 1.73 | 0.95 | 0.189 | 0.105 | **H-1280** | **H-1220** |
| **23.812** | 56.896 | 19.368 | 19.837 | 15.875 | 0.80 | 1.20 | **H-1779** | **H-1729** | 40.0 | 43.1 | 7600 | 10000 | 29.5 | 28.5 | 49.0 | 51.0 | 0.80 | 1.20 | 7.1 | 0.31 | 1.95 | 1.07 | 0.141 | 0.100 | **H-1779** | **H-1729** |
| **25.400** | 50.292 | 14.224 | 14.732 | 10.668 | 1.20 | 1.20 | **H-L44643R** | **H-L44610** | 31.2 | 37.0 | 7800 | 10000 | 31.5 | 29.5 | 44.5 | 47.0 | 1.20 | 1.20 | 3.2 | 0.37 | 1.60 | 0.88 | 0.092 | 0.039 | **H-L44643R** | **H-L44610** |
| | 57.150 | 19.431 | 19.431 | 14.732 | 1.57 | 1.57 | **H-M84548** | **H-M84510** | 42.2 | 49.2 | 7300 | 9700 | 36.0 | 33.0 | 48.5 | 54.0 | 1.57 | 1.57 | 3.4 | 0.55 | 1.10 | 0.60 | 0.156 | 0.088 | **H-M84548** | **H-M84510** |
| | 61.999 | 19.050 | 20.638 | 14.288 | 3.60 | 1.20 | **H-15100** | **H-15245** | 44.6 | 50.7 | 6400 | 8600 | 38.0 | 31.5 | 55.0 | 58.0 | 3.60 | 1.20 | 5.7 | 0.35 | 1.71 | 0.94 | 0.215 | 0.081 | **H-15100** | **H-15245** |
| | 61.999 | 19.050 | 20.638 | 14.288 | 0.80 | 1.20 | **H-15101** | **H-15245** | 44.6 | 50.7 | 6400 | 8600 | 32.5 | 31.5 | 55.0 | 58.0 | 0.80 | 1.20 | 5.7 | 0.35 | 1.71 | 0.94 | 0.215 | 0.081 | **H-15101** | **H-15245** |
| | 64.292 | 21.433 | 21.433 | 16.670 | 1.57 | 1.57 | **H-M86643R** | **H-M86610** | 55.2 | 70.7 | 6400 | 8500 | 38.0 | 36.5 | 54.0 | 61.0 | 1.57 | 1.57 | 3.4 | 0.55 | 1.10 | 0.60 | 0.248 | 0.127 | **H-M86643R** | **H-M86610** |
| | 65.088 | 22.225 | 21.463 | 15.875 | 1.60 | 1.60 | **H-23100** | **H-23256** | 47.8 | 51.7 | 5600 | 7900 | 39.0 | 34.5 | 53.0 | 61.0 | 1.60 | 1.60 | 2.2 | 0.73 | 0.82 | 0.45 | 0.231 | 0.141 | **H-23100** | **H-23256** |
| **26.157** | 61.913 | 19.050 | 20.638 | 14.288 | 0.80 | 2.00 | **H-15103** | **H-15243** | 44.6 | 50.7 | 6400 | 8600 | 33.0 | 32.5 | 55.0 | 58.0 | 0.80 | 2.00 | 5.7 | 0.35 | 1.71 | 0.94 | 0.213 | 0.079 | **H-15103** | **H-15243** |
| | 61.999 | 19.050 | 20.638 | 14.288 | 0.80 | 1.20 | **H-15103** | **H-15245** | 44.6 | 50.7 | 6400 | 8600 | 33.0 | 32.5 | 55.0 | 58.0 | 0.80 | 1.20 | 5.7 | 0.35 | 1.71 | 0.94 | 0.213 | 0.081 | **H-15103** | **H-15245** |
| **26.988** | 50.292 | 14.224 | 14.732 | 10.668 | 3.60 | 1.20 | **H-L44649R** | **H-L44610** | 31.2 | 37 | 7800 | 10000 | 37.5 | 31.0 | 44.5 | 47.0 | 3.60 | 1.20 | 3.2 | 0.37 | 1.60 | 0.88 | 0.083 | 0.039 | **H-L44649R** | **H-L44610** |
| | 61.999 | 19.050 | 20.638 | 14.288 | 0.80 | 1.20 | **H-15106** | **H-15245** | 44.6 | 50.7 | 6400 | 8600 | 33.5 | 33.0 | 55.0 | 58.0 | 0.80 | 1.20 | 5.7 | 0.35 | 1.71 | 0.94 | 0.206 | 0.081 | **H-15106** | **H-15245** |
| | 63.500 | 20.638 | 20.638 | 15.875 | 0.80 | 1.20 | **H-15106** | **H-15250** | 44.6 | 50.7 | 6400 | 8600 | 33.5 | 33.0 | 56.0 | 59.0 | 0.80 | 1.20 | 5.7 | 0.35 | 1.71 | 0.94 | 0.206 | 0.112 | **H-15106** | **H-15250** |
| | 63.500 | 20.638 | 20.638 | 15.875 | 0.80 | 1.60 | **H-15106** | **H-15250X** | 44.6 | 50.7 | 6400 | 8600 | 33.5 | 33.0 | 55.0 | 59.0 | 0.80 | 1.60 | 5.7 | 0.35 | 1.71 | 0.94 | 0.206 | 0.111 | **H-15106** | **H-15250X** |
| **28.575** | 57.150 | 19.845 | 19.355 | 15.875 | 3.60 | 1.60 | **H-1988R** | **H-1922** | 48.8 | 57.1 | 7000 | 9300 | 39.5 | 33.5 | 51.0 | 53.5 | 3.60 | 1.60 | 5.9 | 0.33 | 1.82 | 1.00 | 0.151 | 0.076 | **H-1988R** | **H-1922** |
| | 61.999 | 19.050 | 20.638 | 14.288 | 3.60 | 1.20 | **H-15112** | **H-15245** | 44.6 | 50.7 | 6400 | 8600 | 40.0 | 34.0 | 55.0 | 58.0 | 3.60 | 1.20 | 5.7 | 0.35 | 1.71 | 0.94 | 0.193 | 0.081 | **H-15112** | **H-15245** |
| | 63.500 | 20.638 | 20.638 | 15.875 | 3.60 | 1.20 | **H-15112** | **H-15250** | 44.6 | 50.7 | 6400 | 8600 | 40.0 | 34.0 | 56.0 | 59.0 | 3.60 | 1.20 | 5.7 | 0.35 | 1.71 | 0.94 | 0.193 | 0.112 | **H-15112** | **H-15250** |
| | 64.292 | 21.433 | 21.433 | 16.670 | 1.60 | 1.60 | **H-M86647R** | **H-M86610** | 55.2 | 70.7 | 6400 | 8500 | 40.0 | 38.0 | 54.0 | 61.0 | 1.60 | 1.60 | 3.4 | 0.55 | 1.10 | 0.60 | 0.225 | 0.127 | **H-M86647R** | **H-M86610** |
| | 68.263 | 22.225 | 22.225 | 17.463 | 0.80 | 1.60 | **H-02474** | **H-02420** | 51.0 | 61.1 | 6000 | 8000 | 36.5 | 36.0 | 59.0 | 63.0 | 0.80 | 1.60 | 5.1 | 0.42 | 1.44 | 0.79 | 0.252 | 0.150 | **H-02474** | **H-02420** |
| | 73.025 | 22.225 | 22.225 | 17.463 | 0.80 | 3.20 | **H-02872** | **H-02820** | 55.0 | 65.7 | 5500 | 7400 | 37.5 | 37.0 | 62.0 | 68.0 | 0.80 | 3.20 | 3.7 | 0.45 | 1.32 | 0.73 | 0.319 | 0.158 | **H-02872** | **H-02820** |
| **29.000** | 50.292 | 14.224 | 14.732 | 10.668 | 3.60 | 1.27 | **H-L45449** | **H-L45410** | 28.9 | 37.2 | 7600 | 10000 | 39.5 | 33.0 | 44.5 | 48.0 | 3.60 | 1.27 | 3.3 | 0.37 | 1.62 | 0.89 | 0.079 | 0.036 | **H-L45449** | **H-L45410** |
| **29.987** | 61.999 | 19.050 | 20.638 | 14.288 | 1.20 | 1.20 | **H-15117** | **H-15245** | 44.6 | 50.7 | 6400 | 8600 | 36.5 | 35.0 | 55.0 | 58.0 | 1.20 | 1.20 | 5.7 | 0.35 | 1.71 | 0.94 | 0.184 | 0.081 | **H-15117** | **H-15245** |
| **30.000** | 72.085 | 22.385 | 19.202 | 18.415 | 0.80 | 2.40 | **H-14118** | **H-14283** | 46.1 | 55 | 5900 | 7800 | 37.0 | 36.5 | 60.0 | 65.0 | 0.80 | 2.40 | 4.4 | 0.38 | 1.57 | 0.86 | 0.224 | 0.21 | **H-14118** | **H-14283** |
| **30.163** | 64.292 | 21.433 | 21.433 | 16.670 | 1.57 | 1.57 | **H-M86649R** | **H-M86610** | 55.2 | 70.7 | 6400 | 8500 | 41.0 | 38.0 | 54.0 | 61.0 | 1.57 | 1.57 | 3.4 | 0.55 | 1.10 | 0.60 | 0.213 | 0.127 | **H-M86649R** | **H-M86610** |
| | 68.263 | 22.225 | 22.225 | 17.463 | 2.40 | 1.60 | **H-M88043** | **H-M88010** | 56.1 | 71.1 | 6000 | 7900 | 43.5 | 39.5 | 58.0 | 65.0 | 2.40 | 1.60 | 3.0 | 0.55 | 1.10 | 0.60 | 0.258 | 0.144 | **H-M88043** | **H-M88010** |

Note: (1) Minus value of load center "a" indicates that the center is located outside of cone backface.

# Tapered Roller Bearings

## Inch Series

Bore Diameter: 30.213～33.338mm

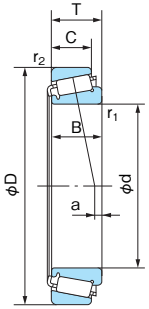


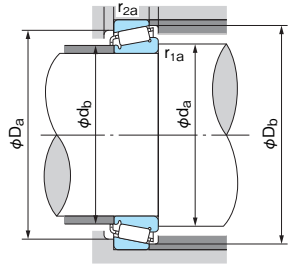


**■Dynamic equivalent radial load**

Pr=XFr+YFa

| $\frac{Fa}{Fr} \leqq e$ | | $\frac{Fa}{Fr} > e$ | |
|---|---|---|---|
| X | Y | X | Y |
| 1 | 0 | 0.4 | $Y_1$ |

Values e and $Y_1$ from table.

**■Static equivalent radial load**

Larger value of following to be used:

$Por=0.5Fr+Y_0Fa$

Por=Fr

Values $Y_0$ from table.

1N=0.102kgf

| Boundary dimensions (mm) | | | | | | | Bearing No. | | Basic load rating | | Limiting speed ($min^{-1}$) | | Abutment and fillet dimensions (mm) | | | | | | Load center (mm) a (1) | Constant e | Axial load factor | | Mass(kg) Reference | | Bearing No. | |
|---|---|---|---|---|---|---|---|---|---|---|---|---|---|---|---|---|---|---|---|---|---|---|---|---|---|---|
| d | D | T | B | C | $r_1$ (min) | $r_2$ (min) | Cone | Cup | Cr (kN) | Cor (kN) | Grease | Oil | da | db | Da | Db | $r_{1a}$ | $r_{2a}$ | | | $Y_1$ | $Y_0$ | Cone | Cup | Cone | Cup |
| 30.213 | 61.999 | 19.050 | 20.638 | 14.288 | 3.60 | 1.20 | **H-15118** | **H-15245** | 44.6 | 50.7 | 6400 | 8600 | 41.5 | 35.5 | 55.0 | 58.0 | 3.60 | 1.20 | 5.7 | 0.35 | 1.71 | 0.94 | 0.181 | 0.081 | **H-15118** | **H-15245** |
| | 61.999 | 19.050 | 20.638 | 14.288 | 0.80 | 1.20 | **H-15120** | **H-15245** | 44.6 | 50.7 | 6400 | 8600 | 36.0 | 35.5 | 55.0 | 58.0 | 0.80 | 1.20 | 5.7 | 0.35 | 1.71 | 0.94 | 0.183 | 0.081 | **H-15120** | **H-15245** |
| | 63.500 | 20.638 | 20.638 | 15.875 | 3.60 | 1.20 | **H-15118** | **H-15250** | 44.6 | 50.7 | 6400 | 8600 | 41.5 | 35.5 | 56.0 | 59.0 | 3.60 | 1.20 | 5.7 | 0.35 | 1.71 | 0.94 | 0.181 | 0.112 | **H-15118** | **H-15250** |
| | 63.500 | 20.638 | 20.638 | 15.875 | 3.60 | 1.60 | **H-15118** | **H-15250X** | 44.6 | 50.7 | 6400 | 8600 | 41.5 | 35.5 | 55.0 | 59.0 | 3.60 | 1.60 | 5.7 | 0.35 | 1.71 | 0.94 | 0.181 | 0.111 | **H-15118** | **H-15250X** |
| 30.226 | 69.012 | 19.845 | 19.583 | 15.875 | 0.80 | 1.20 | **H-14116** | **H-14276** | 46.1 | 55 | 5900 | 7800 | 37.0 | 36.5 | 60.0 | 63.0 | 0.80 | 1.20 | 4.4 | 0.38 | 1.57 | 0.86 | 0.226 | 0.134 | **H-14116** | **H-14276** |
| 31.750 | 59.131 | 15.875 | 16.764 | 11.811 | SP | 1.20 | **H-LM67048** | **H-LM67010** | 35.8 | 43.1 | 6600 | 8800 | 42.5 | 36.0 | 52.0 | 56.0 | SP | 1.20 | 2.9 | 0.41 | 1.46 | 0.80 | 0.120 | 0.062 | **H-LM67048** | **H-LM67010** |
| | 61.999 | 18.161 | 19.050 | 14.288 | SP | 1.20 | **H-15123** | **H-15245** | 44.6 | 50.7 | 6400 | 8600 | 42.5 | 36.5 | 55.0 | 58.0 | SP | 1.20 | 4.8 | 0.35 | 1.71 | 0.94 | 0.157 | 0.081 | **H-15123** | **H-15245** |
| | 61.999 | 19.050 | 20.638 | 14.288 | 3.60 | 1.20 | **H-15125** | **H-15245** | 44.6 | 50.7 | 6400 | 8600 | 42.5 | 36.5 | 55.0 | 58.0 | 3.60 | 1.20 | 5.7 | 0.35 | 1.71 | 0.94 | 0.169 | 0.081 | **H-15125** | **H-15245** |
| | 61.999 | 19.050 | 20.638 | 14.288 | 0.80 | 1.20 | **H-15126** | **H-15245** | 44.6 | 50.7 | 6400 | 8600 | 37.0 | 36.5 | 55.0 | 58.0 | 0.80 | 1.20 | 5.7 | 0.35 | 1.71 | 0.94 | 0.171 | 0.081 | **H-15126** | **H-15245** |
| | 66.421 | 25.400 | 25.357 | 20.638 | 0.80 | 3.20 | **H-2580** | **H-2520** | 71.4 | 85.1 | 6000 | 8000 | 38.5 | 37.5 | 57.0 | 62.5 | 0.80 | 3.20 | 9.4 | 0.27 | 2.19 | 1.21 | 0.281 | 0.123 | **H-2580** | **H-2520** |
| | 68.263 | 22.225 | 22.225 | 17.463 | 3.60 | 1.60 | **H-02475** | **H-02420** | 51.0 | 61.1 | 6000 | 8000 | 44.5 | 38.5 | 59.0 | 63.0 | 3.60 | 1.60 | 5.1 | 0.42 | 1.44 | 0.79 | 0.224 | 0.150 | **H-02475** | **H-02420** |
| | 68.263 | 22.225 | 22.225 | 17.463 | 1.60 | 1.60 | **H-M88046** | **H-M88010** | 56.1 | 71.1 | 6000 | 7900 | 43.0 | 40.5 | 58.0 | 65.0 | 1.60 | 1.60 | 3.0 | 0.55 | 1.10 | 0.60 | 0.245 | 0.144 | **H-M88046** | **H-M88010** |
| | 69.012 | 19.845 | 19.583 | 15.875 | 3.60 | 1.20 | **H-14125A** | **H-14276** | 46.1 | 55 | 5900 | 7800 | 44.0 | 37.5 | 60.0 | 63.0 | 3.60 | 1.20 | 4.4 | 0.38 | 1.57 | 0.86 | 0.213 | 0.134 | **H-14125A** | **H-14276** |
| | 69.012 | 19.845 | 19.583 | 15.875 | 3.60 | 3.20 | **H-14125A** | **H-14274** | 46.1 | 55 | 5900 | 7800 | 44.0 | 37.5 | 59.0 | 63.0 | 3.60 | 3.20 | 4.4 | 0.38 | 1.57 | 0.86 | 0.213 | 0.131 | **H-14125A** | **H-14274** |
| | 69.850 | 23.813 | 25.357 | 19.050 | 0.80 | 1.20 | **H-2580** | **H-2523** | 71.4 | 85.1 | 6000 | 8000 | 38.5 | 37.5 | 61.0 | 64.0 | 0.80 | 1.20 | 9.4 | 0.27 | 2.19 | 1.21 | 0.281 | 0.168 | **H-2580** | **H-2523** |
| 33.338 | 68.263 | 22.225 | 22.225 | 17.463 | 0.80 | 1.60 | **H-M88048** | **H-M88010** | 56.1 | 71.1 | 6000 | 7900 | 42.5 | 41.0 | 58.0 | 65.0 | 0.80 | 1.60 | 3.0 | 0.55 | 1.10 | 0.60 | 0.231 | 0.144 | **H-M88048** | **H-M88010** |
| | 69.012 | 19.845 | 19.583 | 15.875 | 3.60 | 1.20 | **H-14130** | **H-14276** | 46.1 | 55.0 | 5900 | 7800 | 45.0 | 38.5 | 60.0 | 63.0 | 3.60 | 1.20 | 4.4 | 0.38 | 1.57 | 0.86 | 0.2 | 0.134 | **H-14130** | **H-14276** |
| | 69.012 | 19.845 | 19.583 | 15.875 | 0.80 | 3.20 | **H-14131** | **H-14274** | 46.1 | 55.0 | 5900 | 7800 | 39.5 | 38.5 | 59.0 | 63.0 | 0.80 | 3.20 | 4.4 | 0.38 | 1.57 | 0.86 | 0.203 | 0.131 | **H-14131** | **H-14274** |
| | 69.012 | 19.845 | 19.583 | 15.875 | 0.80 | 1.20 | **H-14131** | **H-14276** | 46.1 | 55.0 | 5900 | 7800 | 39.5 | 38.5 | 60.0 | 63.0 | 0.80 | 1.20 | 4.4 | 0.38 | 1.57 | 0.86 | 0.203 | 0.134 | **H-14131** | **H-14276** |
| | 69.012 | 19.845 | 19.583 | 15.875 | 3.60 | 3.20 | **H-14130** | **H-14274** | 46.1 | 55.0 | 5900 | 7800 | 45.0 | 38.5 | 59.0 | 63.0 | 3.60 | 3.20 | 4.4 | 0.38 | 1.57 | 0.86 | 0.2 | 0.131 | **H-14130** | **H-14274** |
| | 76.200 | 23.813 | 25.654 | 19.050 | 1.60 | 3.20 | **H-2790R** | **H-2720** | 74.1 | 92.2 | 5400 | 7200 | 42.0 | 40.0 | 66.0 | 70.0 | 1.60 | 3.20 | 8.1 | 0.30 | 1.98 | 1.09 | 0.364 | 0.184 | **H-2790R** | **H-2720** |

Notes: (1) Minus value of load center "a" indicates that the center is located outside of cone backface.
(2) SP indicates special surface handling configurations.

# Tapered Roller Bearings

## Inch Series

Bore Diameter: 34.925～38.100mm

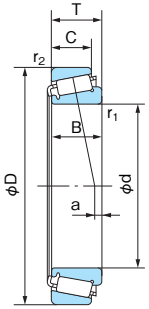


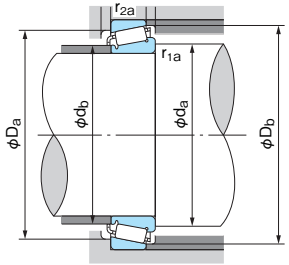


**■Dynamic equivalent radial load**

Pr=XFr+YFa

| $\frac{Fa}{Fr} \leqq e$ | | $\frac{Fa}{Fr} > e$ | |
|---|---|---|---|
| X | Y | X | Y |
| 1 | 0 | 0.4 | $Y_1$ |

Values e and $Y_1$ from table.

**■Static equivalent radial load**

Larger value of following to be used:

Por=0.5Fr+$Y_0$Fa

Por=Fr

Values $Y_0$ from table.

1N=0.102kgf

| Boundary dimensions (mm) | | | | | | | Bearing No. | | Basic load rating | | Limiting speed ($min^{-1}$) | | Abutment and fillet dimensions (mm) | | | | | | Load center (mm) a (1) | Constant e | Axial load factor | | Mass(kg) Reference | | Bearing No. | |
|---|---|---|---|---|---|---|---|---|---|---|---|---|---|---|---|---|---|---|---|---|---|---|---|---|---|---|
| d | D | T | B | C | $r_1$ (min) | $r_2$ (min) | Cone | Cup | Cr (kN) | Cor (kN) | Grease | Oil | da | db | Da | Db | $r_{1a}$ | $r_{2a}$ | | | $Y_1$ | $Y_0$ | Cone | Cup | Cone | Cup |
| 34.925 | 65.088 | 18.034 | 18.288 | 13.970 | SP | 1.20 | H-LM48548 | H-LM48510 | 48.0 | 58.5 | 6000 | 8000 | 46.0 | 40.0 | 58.0 | 61.0 | SP | 1.20 | 3.7 | 0.38 | 1.59 | 0.88 | 0.164 | 0.086 | H-LM48548 | H-LM48510 |
| | 65.088 | 21.082 | 18.288 | 17.018 | SP | 1.60 | H-LM48548 | H-LM48511A | 48.0 | 58.5 | 6000 | 8000 | 46.0 | 40.0 | 58.0 | 61.0 | SP | 1.60 | 3.7 | 0.38 | 1.59 | 0.88 | 0.164 | 0.113 | H-LM48548 | H-LM48511A |
| | 65.088 | 18.034 | 18.288 | 13.970 | 0.80 | 1.20 | H-LM48548A | H-LM48510 | 48.0 | 58.5 | 6000 | 8000 | 40.5 | 42.0 | 58.0 | 61.0 | 0.80 | 1.20 | 3.7 | 0.38 | 1.59 | 0.88 | 0.169 | 0.086 | H-LM48548A | H-LM48510 |
| | 65.088 | 21.082 | 18.288 | 17.018 | 0.80 | 1.60 | H-LM48548A | H-LM48511A | 48.0 | 58.5 | 6000 | 8000 | 40.5 | 42.0 | 58.0 | 61.0 | 0.80 | 1.60 | 3.7 | 0.38 | 1.59 | 0.88 | 0.169 | 0.113 | H-LM48548A | H-LM48511A |
| | 69.012 | 19.845 | 19.583 | 15.875 | 1.60 | 3.20 | H-14137A | H-14274 | 46.1 | 55.0 | 5900 | 7800 | 42.0 | 40.0 | 59.0 | 63.0 | 1.60 | 3.20 | 4.4 | 0.38 | 1.57 | 0.86 | 0.189 | 0.131 | H-14137A | H-14274 |
| | 69.012 | 19.845 | 19.583 | 15.875 | 1.60 | 1.20 | H-14137A | H-14276 | 46.1 | 55.0 | 5900 | 7800 | 42.0 | 40.0 | 60.0 | 63.0 | 1.60 | 1.20 | 4.4 | 0.38 | 1.57 | 0.86 | 0.189 | 0.134 | H-14137A | H-14276 |
| | 69.012 | 19.845 | 19.583 | 15.875 | 3.60 | 3.20 | H-14138A | H-14274 | 46.1 | 55.0 | 5900 | 7800 | 46.0 | 40.0 | 59.0 | 63.0 | 3.60 | 3.20 | 4.4 | 0.38 | 1.57 | 0.86 | 0.187 | 0.131 | H-14138A | H-14274 |
| | 69.012 | 19.845 | 19.583 | 15.875 | 3.60 | 1.20 | H-14138A | H-14276 | 46.1 | 55.0 | 5900 | 7800 | 46.0 | 40.0 | 60.0 | 63.0 | 3.60 | 1.20 | 4.4 | 0.38 | 1.57 | 0.86 | 0.187 | 0.134 | H-14138A | H-14276 |
| | 72.233 | 25.400 | 25.400 | 19.842 | 2.40 | 2.40 | H-HM88649 | H-HM88610 | 66.9 | 87.4 | 5700 | 7600 | 48.5 | 42.5 | 60.0 | 69.0 | 2.40 | 2.40 | 4.7 | 0.55 | 1.10 | 0.60 | 0.301 | 0.185 | H-HM88649 | H-HM88610 |
| | 73.025 | 23.813 | 24.608 | 19.050 | 1.60 | 2.40 | H-25877R | H-25820 | 72.2 | 87.3 | 5600 | 7400 | 43.0 | 40.5 | 64.0 | 68.0 | 1.60 | 2.40 | 8.2 | 0.29 | 2.07 | 1.14 | 0.31 | 0.164 | H-25877R | H-25820 |
| | 73.025 | 23.813 | 24.608 | 19.050 | 1.60 | 0.80 | H-25877R | H-25821 | 72.2 | 87.3 | 5600 | 7400 | 43.0 | 40.5 | 65.0 | 68.0 | 1.60 | 0.80 | 8.2 | 0.29 | 2.07 | 1.14 | 0.31 | 0.165 | H-25877R | H-25821 |
| | 76.200 | 29.370 | 28.575 | 23.813 | 3.60 | 3.30 | H-31593 | H-31520 | 80.9 | 97.4 | 5400 | 7200 | 50.0 | 43.5 | 64.0 | 72.0 | 3.60 | 3.30 | 7.8 | 0.40 | 1.49 | 0.82 | 0.388 | 0.232 | H-31593 | H-31520 |
| | 76.200 | 29.370 | 28.575 | 23.813 | 1.60 | 3.30 | H-31594 | H-31520 | 80.9 | 97.4 | 5400 | 7200 | 46.0 | 43.5 | 64.0 | 72.0 | 1.60 | 3.30 | 7.8 | 0.40 | 1.49 | 0.82 | 0.388 | 0.232 | H-31594 | H-31520 |
| | 79.375 | 29.370 | 29.771 | 23.813 | 3.60 | 3.20 | 3478 | 3420 | 87.4 | 105 | 5200 | 6900 | 50.0 | 43.5 | 67.0 | 74.0 | 3.60 | 3.20 | 8.6 | 0.37 | 1.64 | 0.90 | 0.462 | 0.256 | 3478 | 3420 |
| | 80.167 | 29.370 | 30.391 | 23.813 | 3.60 | 3.20 | 3379 | 3320 | 91 | 106 | 5000 | 6700 | 48.0 | 41.5 | 70.0 | 75.0 | 3.60 | 3.20 | 10.7 | 0.27 | 2.20 | 1.21 | 0.505 | 0.217 | 3379 | 3320 |
| | 85.725 | 30.162 | 30.162 | 23.813 | 3.60 | 3.20 | 3872 | 3820 | 108 | 136 | 4800 | 6400 | 53.0 | 46.0 | 73.0 | 81.0 | 3.60 | 3.20 | 8.4 | 0.40 | 1.49 | 0.82 | 0.614 | 0.285 | 3872 | 3820 |
| 34.987 | 59.131 | 15.875 | 16.764 | 11.938 | SP | 1.27 | H-L68149 | H-L68110 | 35.7 | 48.5 | 6400 | 8500 | 45.5 | 39.0 | 53.0 | 56.0 | SP | 1.27 | 2.7 | 0.42 | 1.44 | 0.79 | 0.112 | 0.056 | H-L68149 | H-L68110 |
| | 59.975 | 15.875 | 16.764 | 11.938 | SP | 1.20 | H-L68149 | H-L68111 | 35.7 | 48.5 | 6400 | 8500 | 45.5 | 39.0 | 53.0 | 56.0 | SP | 1.20 | 2.7 | 0.42 | 1.44 | 0.79 | 0.112 | 0.063 | H-L68149 | H-L68111 |
| 36.487 | 73.025 | 23.813 | 24.608 | 19.050 | 1.60 | 2.40 | H-25880R | H-25820 | 72.2 | 87.3 | 5600 | 7400 | 44.0 | 42.0 | 64.0 | 68.0 | 1.60 | 2.40 | 8.2 | 0.29 | 2.07 | 1.14 | 0.294 | 0.164 | H-25880R | H-25820 |
| | 73.025 | 23.813 | 24.608 | 19.050 | 1.60 | 0.80 | H-25880R | H-25821 | 72.2 | 87.3 | 5600 | 7400 | 44.0 | 42.0 | 65.0 | 68.0 | 1.60 | 0.80 | 8.2 | 0.29 | 2.07 | 1.14 | 0.294 | 0.165 | H-25880R | H-25821 |
| | 76.200 | 23.813 | 25.654 | 19.050 | 1.60 | 3.20 | H-2780R | H-2720 | 74.1 | 92.2 | 5400 | 7200 | 44.5 | 42.5 | 66.0 | 70.0 | 1.60 | 3.20 | 8.1 | 0.30 | 1.98 | 1.09 | 0.33 | 0.185 | H-2780R | H-2720 |
| 36.513 | 76.200 | 29.370 | 28.575 | 23.813 | 3.60 | 3.30 | H-31597 | H-31520 | 80.9 | 97.4 | 5400 | 7200 | 51.0 | 44.5 | 64.0 | 72.0 | 3.60 | 3.30 | 7.8 | 0.40 | 1.49 | 0.82 | 0.368 | 0.232 | H-31597 | H-31520 |
| | 93.663 | 31.750 | 31.750 | 26.195 | 1.60 | 3.20 | 46143 | 46368 | 105 | 134 | 4400 | 5800 | 48.5 | 46.5 | 79.0 | 87.0 | 1.60 | 3.20 | 7.7 | 0.40 | 1.49 | 0.82 | 0.738 | 0.403 | 46143 | 46368 |
| 38.000 | 63.000 | 17.000 | 17.000 | 13.500 | SP | SP | H-JL69349 | H-JL69310 | 43.5 | 58.2 | 6000 | 8000 | 49.0 | 41.0 | 60.0 | 56.5 | SP | SP | 2.4 | 0.42 | 1.44 | 0.79 | 0.128 | 0.070 | H-JL69349 | H-JL69310 |
| 38.100 | 65.088 | 18.034 | 18.288 | 13.970 | SP | 1.17 | H-LM29748 | H-LM29710 | 42.9 | 56.5 | 5800 | 7800 | 49.0 | 42.5 | 59.0 | 62.0 | SP | 1.17 | 4.3 | 0.33 | 1.80 | 0.99 | 0.154 | 0.079 | H-LM29748 | H-LM29710 |
| | 65.088 | 18.034 | 18.288 | 13.970 | 2.36 | 1.17 | H-LM29749 | H-LM29710 | 42.9 | 56.5 | 5800 | 7800 | 46.0 | 42.5 | 59.0 | 62.0 | 2.36 | 1.17 | 4.3 | 0.33 | 1.80 | 0.99 | 0.159 | 0.079 | H-LM29749 | H-LM29710 |
| | 65.088 | 19.812 | 18.288 | 15.748 | 2.36 | 1.30 | H-LM29749 | H-LM29711 | 42.9 | 56.5 | 5800 | 7800 | 46.0 | 42.5 | 58.0 | 62.0 | 2.36 | 1.30 | 4.3 | 0.33 | 1.80 | 0.99 | 0.159 | 0.092 | H-LM29749 | H-LM29711 |
| | 68.275 | 20.000 | 16.520 | 16.032 | 1.60 | 1.60 | H-19150R | H-19268X | 46.1 | 53.8 | 5700 | 7600 | 45.0 | 43.0 | 61.0 | 65.0 | 1.60 | 1.60 | 1.4 | 0.44 | 1.35 | 0.74 | 0.167 | 0.109 | H-19150R | H-19268X |
| | 69.012 | 26.195 | 26.195 | 15.083 | 1.60 | 2.40 | H-13686 | H-13621 | 49.2 | 62 | 5600 | 7500 | 46.0 | 43.0 | 61.0 | 65.0 | 1.60 | 2.40 | 10.1 | 0.40 | 1.49 | 0.82 | 0.254 | 0.102 | H-13686 | H-13621 |
| | 76.200 | 23.813 | 25.654 | 19.050 | 3.60 | 3.20 | H-2788R | H-2720 | 74.1 | 92.2 | 5400 | 7200 | 50.0 | 43.5 | 66.0 | 70.0 | 3.60 | 3.20 | 8.1 | 0.30 | 1.98 | 1.09 | 0.308 | 0.185 | H-2788R | H-2720 |
| | 79.375 | 23.813 | 25.400 | 19.050 | 0.80 | 0.80 | H-26878R. | H-26822. | 81.1 | 105 | 5000 | 6700 | 45.0 | 44.5 | 71.0 | 74.0 | 0.80 | 0.80 | 7.5 | 0.32 | 1.88 | 1.04 | 0.397 | 0.185 | H-26878R. | H-26822. |
| | 79.375 | 29.370 | 29.771 | 23.813 | 3.60 | 3.20 | 3490 | 3420 | 87.4 | 105 | 5200 | 6900 | 52.0 | 45.9 | 67.0 | 74.0 | 3.60 | 3.20 | 8.6 | 0.37 | 1.64 | 0.90 | 0.421 | 0.256 | 3490 | 3420 |
| | 80.167 | 25.400 | 25.400 | 20.638 | 0.80 | 3.20 | H-26878R. | H-26820. | 81.1 | 105 | 5000 | 6700 | 45.0 | 44.5 | 69.0 | 74.0 | 0.80 | 3.20 | 7.5 | 0.32 | 1.88 | 1.04 | 0.397 | 0.217 | H-26878R. | H-26820. |
| | 88.501 | 26.988 | 29.083 | 22.225 | 3.60 | 1.60 | 418 | 414 | 98.2 | 112 | 4900 | 6500 | 51.0 | 44.5 | 77.0 | 80.0 | 3.60 | 1.60 | 10.1 | 0.26 | 2.28 | 1.25 | 0.523 | 0.325 | 418 | 414 |

Notes: (1) Minus value of load center "a" indicates that the center is located outside of cone backface.
(2) SP indicates special surface handling configurations.

# Tapered Roller Bearings

## Inch Series

Bore Diameter: 39.688～42.875mm

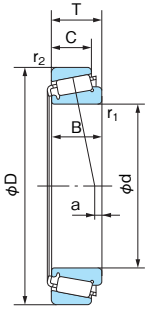


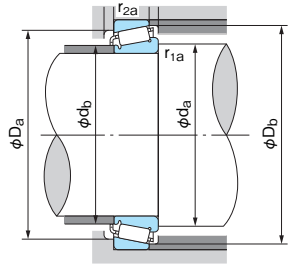


**■Dynamic equivalent radial load**

Pr=XFr+YFa

| $\frac{Fa}{Fr} \leqq e$ | | $\frac{Fa}{Fr} > e$ | |
|---|---|---|---|
| X | Y | X | Y |
| 1 | 0 | 0.4 | $Y_1$ |

Values e and $Y_1$ from table.

**■Static equivalent radial load**

Larger value of following to be used:

Por=0.5Fr+$Y_0$Fa

Por=Fr

Values $Y_0$ from table.

1N=0.102kgf

| Boundary dimensions (mm) | | | | | | | Bearing No. | | Basic load rating | | Limiting speed ($min^{-1}$) | | Abutment and fillet dimensions (mm) | | | | | | Load center (mm) a (1) | Constant e | Axial load factor | | Mass(kg) Reference | | Bearing No. | |
|---|---|---|---|---|---|---|---|---|---|---|---|---|---|---|---|---|---|---|---|---|---|---|---|---|---|---|
| d | D | T | B | C | $r_1$ (min) | $r_2$ (min) | Cone | Cup | Cr (kN) | Cor (kN) | Grease | Oil | da | db | Da | Db | $r_{1a}$ | $r_{2a}$ | | | $Y_1$ | $Y_0$ | Cone | Cup | Cone | Cup |
| 39.688 | 73.025 | 25.654 | 22.098 | 21.336 | 0.80 | 2.40 | H-M201047R | H-M201011 | 68.4 | 90.6 | 5300 | 7100 | 48.0 | 45.5 | 64.0 | 69.0 | 0.80 | 2.40 | 5.8 | 0.33 | 1.80 | 0.99 | 0.278 | 0.167 | H-M201047R | H-M201011 |
| | 76.200 | 23.813 | 25.654 | 19.050 | 3.60 | 3.20 | H-2789R | H-2720 | 74.1 | 92.2 | 5400 | 7200 | 52.0 | 45.0 | 66.0 | 70.0 | 3.60 | 3.20 | 8.1 | 0.30 | 1.98 | 1.09 | 0.289 | 0.185 | H-2789R | H-2720 |
| | 76.200 | 23.813 | 25.654 | 19.050 | 3.60 | 0.80 | H-2789R | H-2729 | 74.1 | 92.2 | 5400 | 7200 | 52.0 | 45.0 | 68.0 | 70.0 | 3.60 | 0.80 | 8.1 | 0.30 | 1.98 | 1.09 | 0.289 | 0.189 | H-2789R | H-2729 |
| 40.000 | 76.200 | 20.638 | 20.940 | 15.507 | 1.60 | 1.20 | 28158 | 28300 | 57.3 | 65.9 | 5300 | 7000 | 47.5 | 45.0 | 68.0 | 71.0 | 1.60 | 1.20 | 4.5 | 0.40 | 1.49 | 0.82 | 0.266 | 0.137 | 28158 | 28300 |
| 40.987 | 67.975 | 17.500 | 18.000 | 13.500 | SP | 1.60 | H-LM300849 | H-LM300811 | 44.0 | 59.5 | 5500 | 7400 | 52.0 | 45.0 | 61.0 | 65.0 | SP | 1.60 | 3.6 | 0.35 | 1.72 | 0.95 | 0.157 | 0.081 | H-LM300849 | H-LM300811 |
| 41.275 | 73.025 | 16.667 | 17.463 | 12.700 | 3.60 | 1.60 | H-18590 | H-18520 | 45.9 | 55.8 | 5200 | 6900 | 53.0 | 46.0 | 66.0 | 69.0 | 3.60 | 1.60 | 2.2 | 0.35 | 1.71 | 0.94 | 0.199 | 0.085 | H-18590 | H-18520 |
| | 73.431 | 19.558 | 19.812 | 14.732 | 3.60 | 0.80 | H-LM501349 | H-LM501310 | 57.8 | 73.0 | 5200 | 7000 | 53.0 | 46.5 | 67.0 | 70.0 | 3.60 | 0.80 | 3.5 | 0.40 | 1.50 | 0.83 | 0.227 | 0.167 | H-LM501349 | H-LM501310 |
| | 73.431 | 21.430 | 19.812 | 16.604 | 3.60 | 0.80 | H-LM501349 | H-LM501314 | 57.8 | 73.0 | 5200 | 7000 | 53.0 | 46.5 | 66.0 | 70.0 | 3.60 | 0.80 | 3.5 | 0.40 | 1.50 | 0.83 | 0.227 | 0.126 | H-LM501349 | H-LM501314 |
| | 76.200 | 18.009 | 17.384 | 14.288 | 1.60 | 1.60 | 11162R | 11300 | 51.6 | 63.3 | 5200 | 6900 | 49.0 | 46.5 | 67.0 | 72.0 | 1.60 | 1.60 | 0.5 | 0.49 | 1.23 | 0.68 | 0.221 | 0.127 | 11162R | 11300 |
| | 76.200 | 22.225 | 23.020 | 17.463 | 3.60 | 0.80 | 24780R | 24720 | 66.3 | 83.3 | 5200 | 6900 | 54.0 | 47.0 | 68.0 | 72.0 | 3.60 | 0.80 | 4.8 | 0.39 | 1.53 | 0.84 | 0.275 | 0.148 | 24780R | 24720 |
| | 76.200 | 25.400 | 23.020 | 20.638 | 3.60 | 2.40 | 24780R | 24721 | 66.3 | 83.3 | 5200 | 6900 | 54.0 | 47.0 | 72.0 | 66.0 | 3.60 | 2.40 | 4.8 | 0.39 | 1.53 | 0.84 | 0.275 | 0.186 | 24780R | 24721 |
| | 79.375 | 23.813 | 25.400 | 19.050 | 3.60 | 0.80 | H-26882R. | H-26822. | 81.1 | 105 | 5000 | 6700 | 54.0 | 47.0 | 71.0 | 74.0 | 3.60 | 0.80 | 7.5 | 0.32 | 1.88 | 1.04 | 0.355 | 0.186 | H-26882R. | H-26822. |
| | 80.167 | 25.400 | 25.400 | 20.638 | 3.60 | 3.20 | H-26882R. | H-26820. | 81.1 | 105 | 5000 | 6700 | 54.0 | 47.0 | 70.0 | 74.0 | 3.60 | 3.20 | 7.5 | 0.32 | 1.88 | 1.04 | 0.355 | 0.217 | H-26882R. | H-26820. |
| | 80.167 | 29.370 | 30.391 | 23.813 | 3.60 | 3.20 | 3383 | 3320 | 91 | 106 | 5000 | 6700 | 53.0 | 46.5 | 70.0 | 75.0 | 3.60 | 3.20 | 10.7 | 0.27 | 2.20 | 1.21 | 0.419 | 0.217 | 3383 | 3320 |
| | 80.167 | 29.370 | 30.391 | 23.813 | 0.80 | 3.20 | 3384 | 3320 | 91 | 106 | 5000 | 6700 | 47.0 | 46.5 | 70.0 | 75.0 | 0.80 | 3.20 | 10.7 | 0.27 | 2.20 | 1.21 | 0.421 | 0.217 | 3384 | 3320 |
| | 82.550 | 26.543 | 25.654 | 20.193 | 3.60 | 3.30 | H-M802048 | H-M802011 | 83.7 | 105 | 4900 | 6500 | 57.0 | 50.6 | 70.0 | 79.0 | 3.60 | 3.30 | 3.3 | 0.55 | 1.10 | 0.60 | 0.403 | 0.227 | H-M802048 | H-M802011 |
| | 84.138 | 30.163 | 30.886 | 23.813 | 3.60 | 3.20 | 3577R | 3520 | 95.8 | 120 | 4600 | 6200 | 54.0 | 48.0 | 74.0 | 79.5 | 3.60 | 3.20 | 9.7 | 0.31 | 1.96 | 1.08 | 0.532 | 0.221 | 3577R | 3520 |
| | 85.725 | 30.162 | 30.162 | 23.812 | 3.60 | 3.20 | 3877 | 3820 | 108 | 136 | 4800 | 6400 | 57.0 | 50.3 | 73.0 | 81.0 | 3.60 | 3.20 | 8.4 | 0.40 | 1.49 | 0.82 | 0.525 | 0.285 | 3877 | 3820 |
| | 87.313 | 30.163 | 30.886 | 23.813 | 3.60 | 3.20 | 3577R | 3525 | 95.8 | 120 | 4600 | 6200 | 54.0 | 48.0 | 75.0 | 81.0 | 3.60 | 3.20 | 9.7 | 0.31 | 1.96 | 1.08 | 0.532 | 0.3 | 3577R | 3525 |
| | 87.313 | 30.163 | 30.886 | 23.813 | 1.60 | 3.20 | H-3585R | H-3525 | 95.8 | 120 | 4600 | 6200 | 50.0 | 48.0 | 75.0 | 81.0 | 1.60 | 3.20 | 9.7 | 0.31 | 1.96 | 1.08 | 0.537 | 0.3 | H-3585R | H-3525 |
| | 88.900 | 30.163 | 29.370 | 23.020 | 0.80 | 3.30 | HM803145 | HM803110 | 99.6 | 125 | 4600 | 6100 | 54.0 | 53.0 | 74.0 | 85.0 | 0.80 | 3.30 | 4.1 | 0.55 | 1.10 | 0.60 | 0.577 | 0.318 | HM803145 | HM803110 |
| | 88.900 | 30.163 | 29.370 | 23.020 | 3.60 | 3.30 | HM803146 | HM803110 | 99.6 | 125 | 4600 | 6100 | 60.0 | 53.0 | 74.0 | 85.0 | 3.60 | 3.30 | 4.1 | 0.55 | 1.10 | 0.60 | 0.574 | 0.318 | HM803146 | HM803110 |
| | 90.488 | 39.688 | 40.386 | 33.338 | 3.60 | 3.20 | 4388 | 4335 | 132 | 169 | 4500 | 6000 | 57.0 | 51.0 | 77.0 | 85.0 | 3.60 | 3.20 | 14.1 | 0.28 | 2.11 | 1.16 | 0.775 | 0.454 | 4388 | 4335 |
| 42.863 | 87.313 | 30.163 | 30.886 | 23.813 | 3.60 | 3.20 | H-3579R | H-3525 | 95.8 | 120 | 4600 | 6200 | 56.0 | 49.5 | 75.0 | 81.0 | 3.60 | 3.20 | 9.7 | 0.31 | 1.96 | 1.08 | 0.507 | 0.3 | H-3579R | H-3525 |
| 42.875 | 82.931 | 26.988 | 25.400 | 22.225 | 3.60 | 2.40 | H-25577 | H-25523 | 77.3 | 100 | 4800 | 6300 | 55.0 | 49.0 | 77.0 | 72.0 | 3.60 | 2.40 | 6.3 | 0.33 | 1.79 | 0.99 | 0.383 | 0.246 | H-25577 | H-25523 |
| | 83.058 | 23.876 | 25.400 | 19.114 | 3.60 | 2.00 | H-25577 | H-25522 | 77.3 | 100 | 4800 | 6300 | 55.0 | 49.0 | 73.0 | 77.0 | 3.60 | 2.00 | 6.3 | 0.33 | 1.79 | 0.99 | 0.383 | 0.203 | H-25577 | H-25522 |

Notes: (1) Minus value of load center "a" indicates that the center is located outside of cone backface.
(2) SP indicates special surface handling configurations.

# Tapered Roller Bearings

## Inch Series

Bore Diameter: 44.450～45.618mm

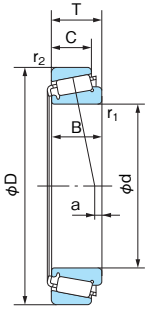


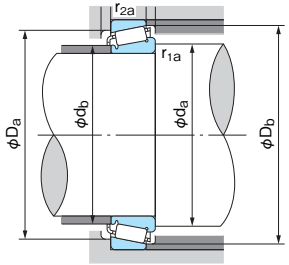


**Dynamic equivalent radial load**

Pr=XFr+YFa

| $\frac{Fa}{Fr} \leqq e$ | | $\frac{Fa}{Fr} > e$ | |
|---|---|---|---|
| X | Y | X | Y |
| 1 | 0 | 0.4 | $Y_1$ |

Values e and $Y_1$ from table.

**Static equivalent radial load**

Larger value of following to be used:

Por=0.5Fr+$Y_0$Fa

Por=Fr

Values $Y_0$ from table.

1N=0.102kgf

| Boundary dimensions (mm) | | | | | | | Bearing No. | | Basic load rating | | Limiting speed ($min^{-1}$) | | Abutment and fillet dimensions (mm) | | | | | | Load center (mm) | Constant | Axial load factor | | Mass(kg) Reference | | Bearing No. | |
|---|---|---|---|---|---|---|---|---|---|---|---|---|---|---|---|---|---|---|---|---|---|---|---|---|---|---|
| d | D | T | B | C | $r_1$ (min) | $r_2$ (min) | Cone | Cup | Cr (kN) | Cor (kN) | Grease | Oil | da | db | Da | Db | $r_{1a}$ | $r_{2a}$ | a (1) | e | $Y_1$ | $Y_0$ | Cone | Cup | Cone | Cup |
| 44.450 | 82.931 | 23.813 | 25.400 | 19.050 | 3.60 | 0.80 | H-25580 | H-25520 | 77.3 | 100 | 4800 | 6300 | 57.0 | 55.0 | 74.0 | 77.0 | 3.60 | 0.80 | 6.3 | 0.33 | 1.79 | 0.99 | 0.362 | 0.2 | H-25580 | H-25520 |
| | 82.931 | 23.813 | 25.400 | 19.050 | 0.50 | 0.80 | H-25581 | H-25520 | 77.3 | 100 | 4800 | 6300 | 51.0 | 50.0 | 74.0 | 77.0 | 0.50 | 0.80 | 6.3 | 0.33 | 1.79 | 0.99 | 0.365 | 0.2 | H-25581 | H-25520 |
| | 83.058 | 23.876 | 25.400 | 19.114 | 3.60 | 2.00 | H-25580 | H-25522 | 77.3 | 100 | 4800 | 6300 | 57.0 | 50.0 | 73.0 | 77.0 | 3.60 | 2.00 | 6.3 | 0.33 | 1.79 | 0.99 | 0.362 | 0.203 | H-25580 | H-25522 |
| | 84.138 | 30.163 | 30.886 | 23.813 | 3.60 | 3.20 | 3578R | 3520 | 95.8 | 120 | 4600 | 6200 | 57.0 | 51.0 | 74.0 | 79.5 | 3.60 | 3.20 | 9.7 | 0.31 | 1.96 | 1.08 | 0.479 | 0.221 | 3578R | 3520 |
| | 85.001 | 20.638 | 21.692 | 17.463 | 3.60 | 1.30 | 355X | 354A | 71.8 | 81.7 | 4600 | 6200 | 56.0 | 50.0 | 77.0 | 80.0 | 3.60 | 1.30 | 5.1 | 0.31 | 1.96 | 1.08 | 0.342 | 0.16 | 355X | 354A |
| | 87.313 | 30.163 | 30.886 | 23.813 | 3.60 | 3.20 | H-3578R | H-3525 | 95.8 | 120 | 4600 | 6200 | 57.0 | 51.0 | 75.0 | 81.0 | 3.60 | 3.20 | 9.7 | 0.31 | 1.96 | 1.08 | 0.483 | 0.3 | H-3578R | H-3525 |
| | 88.900 | 30.163 | 29.370 | 23.020 | 3.60 | 3.20 | HM803149 | HM803110 | 99.6 | 125 | 4600 | 6100 | 62.0 | 53.4 | 74.0 | 85.0 | 3.60 | 3.20 | 4.1 | 0.55 | 1.10 | 0.60 | 0.525 | 0.318 | HM803149 | HM803110 |
| | 90.119 | 23.000 | 21.692 | 21.808 | 3.60 | 2.40 | 355X | 352 | 71.8 | 81.7 | 4600 | 6200 | 56.0 | 50.0 | 82.0 | 78.0 | 3.60 | 2.40 | 5.1 | 0.31 | 1.96 | 1.08 | 0.342 | 0.318 | 355X | 352 |
| | 92.075 | 30.163 | 29.370 | 23.020 | 3.60 | 3.20 | HM803149 | HM803112 | 99.6 | 125 | 4600 | 6100 | 62.0 | 53.4 | 75.0 | 85.0 | 3.60 | 3.20 | 4.1 | 0.55 | 1.10 | 0.60 | 0.525 | 0.398 | HM803149 | HM803112 |
| | 93.264 | 30.163 | 30.302 | 23.813 | 3.60 | 3.20 | 3782 | 3720 | 103 | 137 | 4200 | 5500 | 58.0 | 52.0 | 82.0 | 88.0 | 3.60 | 3.20 | 8.0 | 0.34 | 1.77 | 0.97 | 0.658 | 0.288 | 3782 | 3720 |
| | 95.250 | 30.958 | 28.301 | 20.638 | 1.20 | 0.80 | 53176 | 53375 | 88.7 | 98.4 | 3700 | 5200 | 59.0 | 52.5 | 81.0 | 89.0 | 1.20 | 0.80 | 1.0 | 0.74 | 0.81 | 0.45 | 0.562 | 0.363 | 53176 | 53375 |
| | 95.250 | 30.958 | 28.301 | 20.638 | 3.60 | 0.80 | 53177 | 53375 | 88.7 | 98.4 | 3700 | 5200 | 63.0 | 52.5 | 81.0 | 89.0 | 3.60 | 0.80 | 1.0 | 0.74 | 0.81 | 0.45 | 0.557 | 0.363 | 53177 | 53375 |
| | 95.250 | 27.783 | 28.575 | 22.225 | 0.80 | 0.80 | 33885 | 33822 | 108 | 141 | 4100 | 5400 | 53.0 | 53.0 | 86.0 | 90.0 | 0.80 | 0.80 | 7.4 | 0.33 | 1.82 | 1.00 | 0.714 | 0.267 | 33885 | 33822 |
| | 95.250 | 30.958 | 28.575 | 22.225 | 3.60 | 0.80 | HM903249 | HM903210 | 99.7 | 120 | 3700 | 5100 | 65.0 | 54.0 | 81.0 | 91.0 | 3.60 | 0.80 | 0.1 | 0.74 | 0.81 | 0.45 | 0.613 | 0.383 | HM903249 | HM903210 |
| | 95.250 | 30.163 | 29.370 | 23.020 | 3.60 | 3.20 | HM804843 | HM804810 | 104 | 140 | 3300 | 4400 | 63.0 | 57.0 | 81.0 | 91.0 | 3.60 | 3.20 | 3.7 | 0.55 | 1.10 | 0.60 | 0.67 | 0.351 | HM804843 | HM804810 |
| | 104.775 | 30.163 | 30.958 | 23.813 | 0.80 | 3.20 | 45280 | 45220 | 126 | 165 | 3700 | 4900 | 55.0 | 54.0 | 93.0 | 99.0 | 0.80 | 3.20 | 8.0 | 0.33 | 1.80 | 0.99 | 1 | 0.345 | 45280 | 45220 |
| | 104.775 | 36.513 | 36.513 | 28.575 | 3.60 | 3.20 | HM807040 | HM807010 | 141 | 195 | 3800 | 5100 | 66.0 | 59.0 | 89.0 | 100.0 | 3.60 | 3.20 | 7.2 | 0.49 | 1.23 | 0.68 | 1.13 | 0.497 | HM807040 | HM807010 |
| | 111.125 | 30.163 | 26.909 | 20.638 | 3.60 | 3.20 | 55175CR | 55437 | 111 | 150 | 3100 | 4300 | 67.0 | 60.0 | 92.0 | 105.0 | 3.60 | 3.20 | (7.2) | 0.88 | 0.68 | 0.37 | 0.938 | 0.507 | 55175CR | 55437 |
| | 114.300 | 44.450 | 44.450 | 34.925 | 3.60 | 3.20 | 65385 | 65320 | 189 | 230 | 3800 | 5000 | 65.0 | 59.0 | 97.0 | 107.0 | 3.60 | 3.20 | 12.5 | 0.43 | 1.40 | 0.77 | 1.48 | 0.869 | 65385 | 65320 |
| 44.983 | 82.931 | 23.813 | 25.400 | 19.050 | 1.60 | 0.80 | H-25584 | H-25520 | 77.3 | 100 | 4800 | 6300 | 53.0 | 51.0 | 74.0 | 77.0 | 1.60 | 0.80 | 6.3 | 0.33 | 1.79 | 0.99 | 0.357 | 0.2 | H-25584 | H-25520 |
| | 83.058 | 23.813 | 25.400 | 19.050 | 1.60 | 3.20 | H-25584 | H-25521 | 77.3 | 100 | 4800 | 6300 | 53.0 | 51.0 | 72.0 | 77.0 | 1.60 | 3.20 | 6.3 | 0.33 | 1.79 | 0.99 | 0.357 | 0.2 | H-25584 | H-25521 |
| | 83.058 | 23.876 | 25.400 | 19.114 | 1.60 | 2.00 | H-25584 | H-25522 | 77.3 | 100 | 4800 | 6300 | 53.0 | 51.0 | 73.0 | 77.0 | 1.60 | 2.00 | 6.3 | 0.33 | 1.79 | 0.99 | 0.357 | 0.203 | H-25584 | H-25522 |
| | 93.264 | 30.163 | 30.302 | 23.813 | 3.60 | 3.20 | 3776 | 3720 | 103 | 137 | 4200 | 5500 | 59.0 | 53.0 | 82.0 | 88.0 | 3.60 | 3.20 | 8.0 | 0.34 | 1.77 | 0.97 | 0.650 | 0.228 | 3776 | 3720 |
| 45.230 | 79.985 | 19.842 | 20.638 | 15.080 | 2.00 | 1.20 | H-17887 | H-17831 | 55.1 | 70.8 | 4800 | 6400 | 57.0 | 52.0 | 68.0 | 74.0 | 2.00 | 1.20 | 4.0 | 0.37 | 1.64 | 0.90 | 0.275 | 0.134 | H-17887 | H-17831 |
| 45.237 | 84.138 | 30.163 | 30.886 | 23.813 | 3.60 | 3.20 | 3586R | 3520 | 95.8 | 120 | 4600 | 6200 | 58.0 | 52.0 | 74.0 | 79.5 | 3.60 | 3.20 | 9.7 | 0.31 | 1.96 | 1.08 | 0.467 | 0.221 | 3586R | 3520 |
| | 87.313 | 30.163 | 30.886 | 23.813 | 3.60 | 3.20 | 3586R | 3525 | 95.8 | 120 | 4600 | 6200 | 58.0 | 52.0 | 75.0 | 81.0 | 3.60 | 3.20 | 9.7 | 0.31 | 1.96 | 1.08 | 0.467 | 0.3 | 3586R | 3525 |
| 45.242 | 73.431 | 19.558 | 19.812 | 15.748 | 3.60 | 0.80 | H-LM102949 | H-LM102910 | 55.6 | 78.1 | 5100 | 6700 | 56.0 | 50.0 | 68.0 | 70.0 | 3.60 | 0.80 | 4.9 | 0.31 | 1.97 | 1.08 | 0.209 | 0.100 | H-LM102949 | H-LM102910 |
| | 77.788 | 19.842 | 19.842 | 15.080 | 3.60 | 0.80 | H-LM603049 | H-LM603011 | 57.1 | 73.5 | 4900 | 6500 | 57.0 | 50.0 | 71.0 | 74.0 | 3.60 | 0.80 | 2.3 | 0.43 | 1.41 | 0.77 | 0.243 | 0.120 | H-LM603049 | H-LM603011 |
| | 77.788 | 21.430 | 19.842 | 16.667 | 3.60 | 0.80 | H-LM603049 | H-LM603012 | 57.1 | 73.5 | 4900 | 6500 | 57.0 | 50.0 | 71.0 | 74.0 | 3.60 | 0.80 | 2.3 | 0.43 | 1.41 | 0.77 | 0.243 | 0.138 | H-LM603049 | H-LM603012 |
| | 79.974 | 19.842 | 19.842 | 15.080 | 3.60 | 0.80 | H-LM603049 | H-LM603014 | 57.1 | 73.5 | 4900 | 6500 | 57.0 | 50.0 | 71.0 | 74.0 | 3.60 | 0.80 | 2.3 | 0.43 | 1.41 | 0.77 | 0.243 | 0.152 | H-LM603049 | H-LM603014 |
| 45.618 | 82.931 | 23.813 | 25.400 | 19.050 | 3.60 | 0.80 | H-25590 | H-25520 | 77.3 | 100 | 4800 | 6300 | 58.0 | 51.0 | 74.0 | 77.0 | 3.60 | 0.80 | 6.3 | 0.33 | 1.79 | 0.99 | 0.345 | 0.201 | H-25590 | H-25520 |
| | 82.931 | 26.988 | 25.400 | 22.225 | 3.60 | 2.40 | H-25590 | H-25523 | 77.3 | 100 | 4800 | 6300 | 58.0 | 51.0 | 72.0 | 77.0 | 3.60 | 2.40 | 6.3 | 0.33 | 1.79 | 0.99 | 0.345 | 0.246 | H-25590 | H-25523 |
| | 83.058 | 23.876 | 25.400 | 19.114 | 3.60 | 2.00 | H-25590 | H-25522 | 77.3 | 100 | 4800 | 6300 | 58.0 | 51.0 | 73.0 | 77.0 | 3.60 | 2.00 | 6.3 | 0.33 | 1.79 | 0.99 | 0.345 | 0.203 | H-25590 | H-25522 |
| | 83.058 | 23.813 | 25.400 | 19.050 | 3.60 | 3.20 | H-25590 | H-25521 | 77.3 | 100 | 4800 | 6300 | 58.0 | 51.0 | 72.0 | 77.0 | 3.60 | 3.20 | 6.3 | 0.33 | 1.79 | 0.99 | 0.345 | 0.2 | H-25590 | H-25521 |

Note: (1) Minus value of load center "a" indicates that the center is located outside of cone backface.

# Tapered Roller Bearings

## Inch Series

Bore Diameter: 46.038～51.592mm

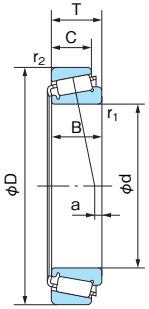


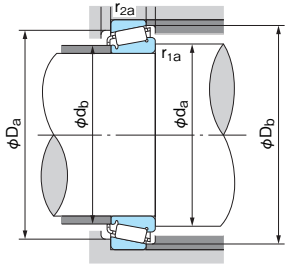


**■Dynamic equivalent radial load**

Pr=XFr+YFa

| $\frac{Fa}{Fr} \leqq e$ | | $\frac{Fa}{Fr} > e$ | |
|---|---|---|---|
| X | Y | X | Y |
| 1 | 0 | 0.4 | $Y_1$ |

Values e and $Y_1$ from table.

**■Static equivalent radial load**

Larger value of following to be used:

Por=0.5Fr+$Y_0$Fa

Por=Fr

Values $Y_0$ from table.

1N=0.102kgf

| Boundary dimensions (mm) | | | | | | | Bearing No. | | Basic load rating | | Limiting speed ($min^{-1}$) | | Abutment and fillet dimensions (mm) | | | | | | Load center (mm) a (1) | Constant e | Axial load factor | | Mass(kg) Reference | | Bearing No. | |
|---|---|---|---|---|---|---|---|---|---|---|---|---|---|---|---|---|---|---|---|---|---|---|---|---|---|---|
| d | D | T | B | C | $r_1$ (min) | $r_2$ (min) | Cone | Cup | Cr (kN) | Cor (kN) | Grease | Oil | da | db | Da | Db | $r_{1a}$ | $r_{2a}$ | | | $Y_1$ | $Y_0$ | Cone | Cup | Cone | Cup |
| 46.038 | 79.375 | 17.463 | 17.463 | 13.495 | 2.80 | 1.60 | 18690 | 18620 | 47.1 | 59.1 | 4800 | 6400 | 56.0 | 51.0 | 71.0 | 74.0 | 2.80 | 1.60 | 1.5 | 0.37 | 1.60 | 0.88 | 0.208 | 0.123 | 18690 | 18620 |
| | 85.001 | 20.638 | 21.692 | 17.463 | 2.40 | 1.30 | 359S | 354A | 71.8 | 81.7 | 4600 | 6200 | 55.0 | 51.0 | 77.0 | 80.0 | 2.40 | 1.30 | 5.1 | 0.31 | 1.96 | 1.08 | 0.323 | 0.160 | 359S | 354A |
| 47.625 | 88.900 | 20.638 | 22.225 | 16.513 | 2.40 | 1.30 | 369S | 362A | 74.3 | 87.3 | 4400 | 5800 | 57.0 | 53.0 | 81.0 | 84.0 | 2.40 | 1.30 | 4.6 | 0.32 | 1.88 | 1.03 | 0.375 | 0.164 | 369S | 362A |
| | 88.900 | 25.400 | 25.400 | 19.050 | 3.60 | 3.20 | M804049 | M804010 | 87.1 | 112 | 4400 | 5900 | 62.0 | 55.0 | 76.0 | 85.0 | 3.60 | 3.20 | 2.1 | 0.55 | 1.10 | 0.60 | 0.450 | 0.216 | M804049 | M804010 |
| | 90.000 | 20.000 | 22.225 | 15.875 | 3.60 | 2.00 | 369A | 362 | 74.3 | 87.3 | 4400 | 5800 | 60.0 | 53.0 | 81.0 | 84.0 | 3.60 | 2.00 | 4.6 | 0.32 | 1.88 | 1.03 | 0.373 | 0.173 | 369A | 362 |
| | 93.264 | 30.163 | 30.302 | 23.813 | 3.60 | 3.20 | 3779 | 3720 | 103 | 137 | 4200 | 5500 | 61.0 | 55.0 | 82.0 | 88.0 | 3.60 | 3.20 | 8.0 | 0.34 | 1.77 | 0.97 | 0.606 | 0.288 | 3779 | 3720 |
| | 95.250 | 30.163 | 29.370 | 23.020 | 3.60 | 3.20 | HM804846 | HM804810 | 104 | 140 | 3300 | 4400 | 64.0 | 57.0 | 81.0 | 91.0 | 3.60 | 3.20 | 3.6 | 0.55 | 1.10 | 0.60 | 0.617 | 0.351 | HM804846 | HM804810 |
| | 107.950 | 36.513 | 36.957 | 28.575 | 3.60 | 3.20 | 536 | 532X | 138 | 172 | 3800 | 5100 | 62.0 | 56.0 | 94.0 | 100.0 | 3.60 | 3.20 | 12.3 | 0.30 | 2.03 | 1.11 | 1.04 | 0.569 | 536 | 532X |
| 48.412 | 95.250 | 30.163 | 29.370 | 23.020 | 2.40 | 3.20 | HM804848 | HM804810 | 104 | 140 | 3300 | 4400 | 63.0 | 57.5 | 81.0 | 91.0 | 2.40 | 3.20 | 3.7 | 0.55 | 1.10 | 0.60 | 0.606 | 0.351 | HM804848 | HM804810 |
| 49.213 | 104.775 | 36.513 | 36.513 | 28.575 | 3.60 | 3.20 | HM807044 | HM807010 | 141 | 195 | 3800 | 5100 | 69.0 | 63.0 | 89.0 | 100.0 | 3.60 | 3.20 | 7.2 | 0.49 | 1.23 | 0.68 | 1.03 | 0.497 | HM807044 | HM807010 |
| 50.000 | 82.000 | 21.500 | 21.500 | 17.000 | 3.00 | 0.50 | H-JLM104948 | H-JLM104910 | 71.7 | 97.9 | 4500 | 6000 | 60.0 | 55.0 | 76.0 | 78.0 | 3.00 | 0.50 | 5.3 | 0.31 | 1.97 | 1.08 | 0.304 | 0.128 | H-JLM104948 | H-JLM104910 |
| | 84.000 | 22.000 | 22.000 | 17.500 | 3.50 | 1.50 | H-JLM704649 | H-JLM704610 | 70.2 | 96.2 | 4500 | 6000 | 62.0 | 56.0 | 76.0 | 80.0 | 3.50 | 1.50 | 2.5 | 0.44 | 1.37 | 0.75 | 0.324 | 0.161 | H-JLM704649 | H-JLM704610 |
| | 90.000 | 28.000 | 28.000 | 23.000 | 3.00 | 2.50 | JM205149 | JM205110 | 105 | 138 | 4300 | 5800 | 62.0 | 57.0 | 80.0 | 85.0 | 3.00 | 2.50 | 7.8 | 0.33 | 1.82 | 1.00 | 0.508 | 0.243 | JM205149 | JM205110 |
| | 105.000 | 37.000 | 36.000 | 29.000 | 3.00 | 2.50 | JHM807045E | JHM807012E | 149 | 205 | 3800 | 5100 | 69.0 | 63.0 | 90.0 | 100.0 | 3.00 | 2.50 | 7.6 | 0.49 | 1.23 | 0.68 | 1.01 | 0.523 | JHM807045E | JHM807012E |
| 50.800 | 82.550 | 21.590 | 22.225 | 16.510 | 3.60 | 1.20 | H-LM104949 | H-LM104911 | 61.2 | 84.3 | 4500 | 6000 | 62.0 | 55.0 | 75.0 | 78.0 | 3.60 | 1.20 | 5.2 | 0.31 | 1.97 | 1.08 | 0.287 | 0.131 | H-LM104949 | H-LM104911 |
| | 82.931 | 21.590 | 22.225 | 16.510 | 3.60 | 1.20 | H-LM104949 | H-LM104912 | 61.2 | 84.3 | 4500 | 6000 | 62.0 | 55.0 | 75.0 | 78.0 | 3.60 | 1.20 | 5.2 | 0.31 | 1.97 | 1.08 | 0.287 | 0.138 | H-LM104949 | H-LM104912 |
| | 85.001 | 17.463 | 17.463 | 13.495 | 3.60 | 1.60 | 18790 | 18720 | 49.7 | 65.5 | 4400 | 5900 | 62.0 | 56.0 | 77.0 | 80.0 | 3.60 | 1.60 | 0.1 | 0.41 | 1.48 | 0.81 | 0.227 | 0.133 | 18790 | 18720 |
| | 88.900 | 20.638 | 22.225 | 16.513 | 3.60 | 1.30 | 368A | 362A | 74.3 | 87.3 | 4400 | 5800 | 62.0 | 56.0 | 81.0 | 84.0 | 3.60 | 1.30 | 4.6 | 0.32 | 1.88 | 1.03 | 0.331 | 0.164 | 368A | 362A |
| | 89.980 | 24.750 | 25.400 | 19.987 | 3.60 | 2.40 | 28580R | 28520 | 84.8 | 119 | 4200 | 5600 | 63.0 | 57.0 | 81.0 | 86.0 | 3.60 | 2.40 | 4.7 | 0.38 | 1.59 | 0.87 | 0.458 | 0.198 | 28580R | 28520 |
| | 90.000 | 20.000 | 22.225 | 15.875 | 3.60 | 2.00 | 368A | 362 | 74.3 | 87.3 | 4400 | 5800 | 62.0 | 56.0 | 81.0 | 84.0 | 3.60 | 2.00 | 4.6 | 0.32 | 1.88 | 1.03 | 0.331 | 0.173 | 368A | 362 |
| | 92.075 | 24.608 | 25.400 | 19.845 | 3.60 | 0.80 | 28580R. | 28521 | 84.8 | 119 | 4200 | 5600 | 63.0 | 57.0 | 83.0 | 87.0 | 3.60 | 0.80 | 4.7 | 0.38 | 1.59 | 0.87 | 0.453 | 0.247 | 28580R. | 28521 |
| | 93.264 | 30.163 | 30.302 | 23.813 | 0.80 | 3.20 | 3775 | 3720 | 103 | 137 | 4200 | 5500 | 58.0 | 58.0 | 82.0 | 88.0 | 0.80 | 3.20 | 8.0 | 0.34 | 1.77 | 0.97 | 0.551 | 0.288 | 3775 | 3720 |
| | 93.264 | 30.163 | 30.302 | 23.813 | 3.60 | 3.20 | 3780 | 3720 | 103 | 137 | 4200 | 5500 | 64.0 | 58.0 | 82.0 | 88.0 | 3.60 | 3.20 | 8.0 | 0.34 | 1.77 | 0.97 | 0.547 | 0.288 | 3780 | 3720 |
| | 95.250 | 27.783 | 28.575 | 22.225 | 3.60 | 2.40 | 33889 | 33821 | 108 | 141 | 4100 | 5400 | 64.0 | 58.0 | 85.0 | 90.0 | 3.60 | 2.40 | 7.4 | 0.33 | 1.82 | 1.00 | 0.604 | 0.264 | 33889 | 33821 |
| | 95.250 | 27.783 | 28.575 | 22.225 | 3.60 | 0.80 | 33889 | 33822 | 108 | 141 | 4100 | 5400 | 64.0 | 58.0 | 86.0 | 90.0 | 3.60 | 0.80 | 7.4 | 0.33 | 1.82 | 1.00 | 0.604 | 0.267 | 33889 | 33822 |
| | 97.630 | 24.608 | 24.608 | 19.446 | 3.60 | 0.80 | 28678 | 28622 | 89.6 | 131 | 3900 | 5200 | 65.0 | 58.0 | 88.0 | 92.0 | 3.60 | 0.80 | 3.4 | 0.40 | 1.49 | 0.82 | 0.569 | 0.267 | 28678 | 28622 |
| | 101.600 | 31.750 | 31.750 | 25.400 | 3.60 | 3.20 | 49585 | 49520 | 114 | 143 | 3900 | 5200 | 66.0 | 59.0 | 88.0 | 96.0 | 3.60 | 3.20 | 7.8 | 0.40 | 1.50 | 0.82 | 0.736 | 0.384 | 49585 | 49520 |
| | 101.600 | 34.925 | 36.068 | 26.988 | 0.80 | 3.20 | 529 | 522 | 131 | 159 | 4000 | 5300 | 59.0 | 58.0 | 89.0 | 95.0 | 0.80 | 3.20 | 12.7 | 0.29 | 2.10 | 1.16 | 0.806 | 0.411 | 529 | 522 |
| | 101.600 | 34.925 | 36.068 | 26.988 | 3.60 | 3.20 | 529X | 522 | 131 | 159 | 4000 | 5300 | 65.0 | 58.0 | 89.0 | 95.0 | 3.60 | 3.20 | 12.7 | 0.29 | 2.10 | 1.16 | 0.802 | 0.411 | 529X | 522 |
| | 104.775 | 30.163 | 30.958 | 23.813 | 6.40 | 3.20 | 45284 | 45220 | 126 | 165 | 3700 | 4900 | 71.0 | 59.0 | 93.0 | 99.0 | 6.40 | 3.20 | 8.0 | 0.33 | 1.80 | 0.99 | 0.873 | 0.345 | 45284 | 45220 |
| | 104.775 | 36.513 | 36.513 | 28.575 | 3.60 | 3.20 | HM807046 | HM807010 | 141 | 195 | 3800 | 5100 | 70.0 | 63.0 | 89.0 | 100.0 | 3.60 | 3.20 | 7.2 | 0.49 | 1.23 | 0.68 | 0.995 | 0.497 | HM807046 | HM807010 |
| | 107.950 | 36.513 | 36.957 | 28.575 | 3.60 | 3.20 | 537 | 532X | 138 | 172 | 3800 | 5100 | 65.0 | 59.0 | 94.0 | 100.0 | 3.60 | 3.20 | 12.3 | 0.30 | 2.03 | 1.11 | 0.969 | 0.569 | 537 | 532X |
| 51.592 | 90.000 | 20.000 | 22.225 | 15.875 | 2.00 | 2.00 | 368S | 362 | 74.3 | 87.3 | 4400 | 5800 | 59.0 | 56.0 | 81.0 | 84.0 | 2.00 | 2.00 | 4.6 | 0.32 | 1.88 | 1.03 | 0.322 | 0.173 | 368S | 362 |

Note: (1) Minus value of load center "a" indicates that the center is located outside of cone backface.

# Tapered Roller Bearings

## Inch Series

Bore Diameter: 52.388～55.563mm

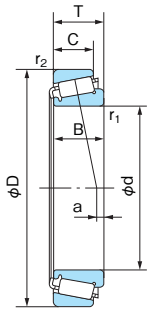


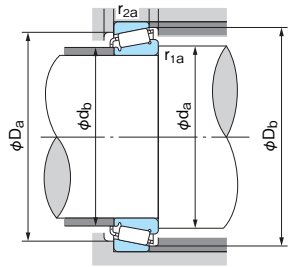


**■Dynamic equivalent radial load**

Pr=XFr+YFa

| $\frac{Fa}{Fr} \leqq e$ | | $\frac{Fa}{Fr} > e$ | |
|---|---|---|---|
| X | Y | X | Y |
| 1 | 0 | 0.4 | $Y_1$ |

Values e and $Y_1$ from table.

**■Static equivalent radial load**

Larger value of following to be used:

Por=0.5Fr+$Y_0$Fa

Por=Fr

Values $Y_0$ from table.

1N=0.102kgf

| Boundary dimensions (mm) | | | | | | | Bearing No. | | Basic load rating | | Limiting speed ($min^{-1}$) | | Abutment and fillet dimensions (mm) | | | | | | Load center (mm) a (1) | Constant e | Axial load factor | | Mass(kg) Reference | | Bearing No. | |
|---|---|---|---|---|---|---|---|---|---|---|---|---|---|---|---|---|---|---|---|---|---|---|---|---|---|---|
| d | D | T | B | C | $r_1$ (min) | $r_2$ (min) | Cone | Cup | Cr (kN) | Cor (kN) | Grease | Oil | $d_a$ | $d_b$ | $D_a$ | $D_b$ | $r_{1a}$ | $r_{2a}$ | | | $Y_1$ | $Y_0$ | Cone | Cup | Cone | Cup |
| 52.388 | 92.075 | 24.608 | 25.400 | 19.845 | 3.60 | 0.80 | **28584R.** | **28521** | 84.8 | 119 | 4200 | 5600 | 65.0 | 58.0 | 83.0 | 87.0 | 3.60 | 0.80 | 4.7 | 0.38 | 1.59 | 0.87 | 0.435 | 0.247 | **28584R.** | **28521** |
| | 93.264 | 30.163 | 30.302 | 23.813 | 2.40 | 3.20 | **3767** | **3720** | 103 | 137 | 4200 | 5500 | 63.0 | 59.0 | 82.0 | 88.0 | 2.40 | 3.20 | 8.0 | 0.34 | 1.77 | 0.97 | 0.519 | 0.288 | **3767** | **3720** |
| | 95.250 | 27.783 | 28.575 | 22.225 | 1.60 | 2.40 | **33890** | **33821** | 108 | 141 | 4100 | 5400 | 61.0 | 59.0 | 85.0 | 90.0 | 1.60 | 2.40 | 7.4 | 0.33 | 1.82 | 1.00 | 0.581 | 0.264 | **33890** | **33821** |
| | 95.250 | 27.783 | 28.575 | 22.225 | 3.60 | 2.40 | **33891** | **33821** | 108 | 141 | 4100 | 5400 | 66.0 | 59.0 | 85.0 | 90.0 | 3.60 | 2.40 | 7.4 | 0.33 | 1.82 | 1.00 | 0.578 | 0.264 | **33891** | **33821** |
| 53.975 | 95.250 | 27.783 | 28.575 | 22.225 | 1.60 | 2.40 | **33895** | **33821** | 108 | 141 | 4100 | 5400 | 63.0 | 60.0 | 85.0 | 90.0 | 1.60 | 2.40 | 7.4 | 0.33 | 1.82 | 1.00 | 0.551 | 0.264 | **33895** | **33821** |
| | 95.250 | 27.783 | 28.575 | 22.225 | 1.60 | 0.80 | **33895** | **33822** | 108 | 141 | 4100 | 5400 | 63.0 | 60.0 | 86.0 | 90.0 | 1.60 | 0.80 | 7.4 | 0.33 | 1.82 | 1.00 | 0.551 | 0.267 | **33895** | **33822** |
| | 96.838 | 21.001 | 21.946 | 15.875 | 1.60 | 0.80 | **389AS** | **382A** | 80.4 | 101 | 3900 | 5200 | 62.0 | 60.0 | 89.0 | 92.0 | 1.60 | 0.80 | 3.6 | 0.35 | 1.69 | 0.93 | 0.479 | 0.177 | **389AS** | **382A** |
| | 98.425 | 21.001 | 21.946 | 17.826 | 0.80 | 0.80 | **389A** | **382** | 80.4 | 101 | 3900 | 5200 | 61.0 | 60.0 | 89.0 | 92.0 | 0.80 | 0.80 | 3.6 | 0.35 | 1.69 | 0.93 | 0.478 | 0.223 | **389A** | **382** |
| | 107.950 | 36.513 | 36.957 | 28.575 | 3.60 | 3.20 | **539** | **532X** | 138 | 172 | 3800 | 5100 | 68.0 | 61.0 | 94.0 | 100.0 | 3.60 | 3.20 | 12.3 | 0.30 | 2.03 | 1.11 | 0.894 | 0.569 | **539** | **532X** |
| | 123.825 | 38.100 | 36.678 | 30.163 | 3.60 | 3.20 | **557S** | **552A** | 162 | 223 | 3200 | 4200 | 71.0 | 65.0 | 109.0 | 116.0 | 3.60 | 3.20 | 9.4 | 0.35 | 1.73 | 0.95 | 1.47 | 0.756 | **557S** | **552A** |
| 54.991 | 135.755 | 53.975 | 56.007 | 44.450 | 3.60 | 3.20 | **6381** | **6320** | 266 | 357 | 3000 | 4000 | 76.0 | 70.0 | 117.0 | 126.0 | 3.60 | 3.20 | 19.2 | 0.32 | 1.85 | 1.02 | 2.75 | 1.37 | **6381** | **6320** |
| 55.000 | 90.000 | 23.000 | 23.000 | 18.500 | 1.60 | 0.50 | **JLM506849E** | **JLM506810E** | 81.4 | 115 | 4200 | 5500 | 63.0 | 61.0 | 82.0 | 86.0 | 1.60 | 0.50 | 2.9 | 0.40 | 1.49 | 0.82 | 0.370 | 0.183 | **JLM506849E** | **JLM506810E** |
| | 95.000 | 29.000 | 29.000 | 23.500 | 1.50 | 2.50 | **JM207049** | **JM207010** | 110 | 150 | 4000 | 5300 | 64.0 | 62.0 | 85.0 | 91.0 | 1.50 | 2.50 | 7.7 | 0.33 | 1.79 | 0.99 | 0.567 | 0.256 | **JM207049** | **JM207010** |
| | 95.000 | 29.000 | 29.000 | 23.500 | 6.00 | 2.50 | **JM207049A** | **JM207010** | 110 | 150 | 4000 | 5300 | 73.0 | 62.0 | 85.0 | 91.0 | 6.00 | 2.50 | 7.7 | 0.33 | 1.79 | 0.99 | 0.558 | 0.256 | **JM207049A** | **JM207010** |
| | 110.000 | 39.000 | 39.000 | 32.000 | 3.00 | 2.50 | **JH307749E** | **JH307710E** | 176 | 224 | 3600 | 4900 | 71.0 | 64.0 | 97.0 | 104.0 | 3.00 | 2.50 | 11.9 | 0.35 | 1.73 | 0.95 | 1.16 | 0.56 | **JH307749E** | **JH307710E** |
| 55.563 | 97.630 | 24.608 | 24.608 | 19.446 | 3.60 | 0.80 | **28680** | **28622** | 89.6 | 131 | 3900 | 5200 | 68.0 | 62.0 | 88.0 | 92.0 | 3.60 | 0.80 | 3.4 | 0.40 | 1.49 | 0.82 | 0.492 | 0.267 | **28680** | **28622** |

Note: (1) Minus value of load center "a" indicates that the center is located outside of cone backface.

# Tapered Roller Bearings

## Inch Series

Bore Diameter: 57.150～61.913mm

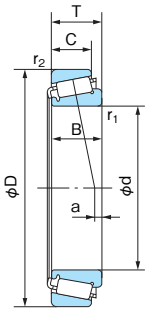


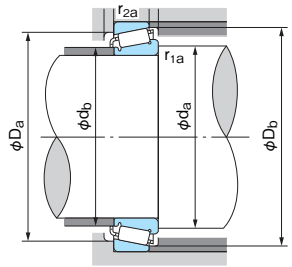


**■Dynamic equivalent radial load**

Pr=XFr+YFa

| $\frac{Fa}{Fr} \leqq e$ | | $\frac{Fa}{Fr} > e$ | |
|---|---|---|---|
| X | Y | X | Y |
| 1 | 0 | 0.4 | $Y_1$ |

Values e and $Y_1$ from table.

**■Static equivalent radial load**

Larger value of following to be used:

Por=0.5Fr+$Y_0$Fa

Por=Fr

Values $Y_0$ from table.

1N=0.102kgf

| Boundary dimensions (mm) | | | | | | | Bearing No. | | Basic load rating | | Limiting speed ($min^{-1}$) | | Abutment and fillet dimensions (mm) | | | | | | Load center (mm) a (1) | Constant e | Axial load factor | | Mass(kg) Reference | | Bearing No. | |
|---|---|---|---|---|---|---|---|---|---|---|---|---|---|---|---|---|---|---|---|---|---|---|---|---|---|---|
| d | D | T | B | C | $r_1$ (min) | $r_2$ (min) | Cone | Cup | Cr (kN) | Cor (kN) | Grease | Oil | da | db | Da | Db | $r_{1a}$ | $r_{2a}$ | | | $Y_1$ | $Y_0$ | Cone | Cup | Cone | Cup |
| | 96.838 | 21.001 | 21.946 | 15.875 | 2.40 | 0.80 | **387** | **382A** | 80.4 | 101 | 3900 | 5200 | 66.0 | 62.0 | 89.0 | 92.0 | 2.40 | 0.80 | 3.6 | 0.35 | 1.69 | 0.93 | 0.428 | 0.177 | **387** | **382A** |
| | 96.838 | 25.400 | 21.946 | 20.274 | 2.40 | 2.40 | **387** | **382S** | 80.4 | 101 | 3900 | 5200 | 66.0 | 62.0 | 87.0 | 91.0 | 2.40 | 2.40 | 3.6 | 0.35 | 1.69 | 0.93 | 0.428 | 0.245 | **387** | **382S** |
| | 96.838 | 21.001 | 21.946 | 15.875 | 3.60 | 0.80 | **387A** | **382A** | 80.4 | 101 | 3900 | 5200 | 69.0 | 62.0 | 89.0 | 92.0 | 3.60 | 0.80 | 3.6 | 0.35 | 1.69 | 0.93 | 0.426 | 0.177 | **387A** | **382A** |
| | 96.838 | 25.400 | 21.946 | 20.274 | 3.60 | 2.40 | **387A** | **382S** | 80.4 | 101 | 3900 | 5200 | 72.0 | 62.0 | 87.0 | 91.0 | 3.60 | 2.40 | 3.6 | 0.35 | 1.69 | 0.93 | 0.426 | 0.245 | **387A** | **382S** |
| | 96.838 | 21.001 | 21.946 | 15.875 | 5.00 | 0.80 | **387AS** | **382A** | 80.4 | 101 | 3900 | 5200 | 72.0 | 62.0 | 89.0 | 92.0 | 5.00 | 0.80 | 3.6 | 0.35 | 1.69 | 0.93 | 0.422 | 0.177 | **387AS** | **382A** |
| | 96.838 | 25.400 | 21.946 | 20.274 | 5.00 | 2.40 | **387AS** | **382S** | 80.4 | 101 | 3900 | 5200 | 72.0 | 62.0 | 87.0 | 91.0 | 5.00 | 2.40 | 3.6 | 0.35 | 1.69 | 0.93 | 0.422 | 0.245 | **387AS** | **382S** |
| | 96.838 | 24.608 | 24.608 | 19.446 | 3.60 | 0.80 | **28682** | **28621** | 89.6 | 131 | 3900 | 5200 | 70.0 | 63.0 | 87.0 | 91.0 | 3.60 | 0.80 | 3.4 | 0.40 | 1.49 | 0.82 | 0.466 | 0.248 | **28682** | **28621** |
| | 97.630 | 24.608 | 24.608 | 19.446 | 3.60 | 0.80 | **28682** | **28622** | 89.6 | 131 | 3900 | 5200 | 70.0 | 63.0 | 88.0 | 92.0 | 3.60 | 0.80 | 3.4 | 0.40 | 1.49 | 0.82 | 0.466 | 0.267 | **28682** | **28622** |
| | 98.425 | 21.001 | 21.946 | 17.826 | 2.40 | 0.80 | **387** | **382** | 80.4 | 101 | 3900 | 5200 | 66.0 | 62.0 | 89.0 | 92.0 | 2.40 | 0.80 | 3.6 | 0.35 | 1.69 | 0.93 | 0.428 | 0.223 | **387** | **382** |
| | 98.425 | 21.001 | 21.946 | 17.826 | 3.60 | 0.80 | **387A** | **382** | 80.4 | 101 | 3900 | 5200 | 69.0 | 62.0 | 89.0 | 92.0 | 3.60 | 0.80 | 3.6 | 0.35 | 1.69 | 0.93 | 0.426 | 0.223 | **387A** | **382** |
| **57.150** | 104.775 | 30.163 | 29.317 | 24.605 | 2.40 | 3.30 | **462** | **453X** | 109 | 144 | 3700 | 4900 | 67.0 | 63.0 | 92.0 | 98.0 | 2.40 | 3.30 | 6.6 | 0.34 | 1.79 | 0.98 | 0.685 | 0.372 | **462** | **453X** |
| | 104.775 | 30.163 | 29.317 | 24.605 | 3.60 | 3.30 | **469** | **453X** | 109 | 144 | 3700 | 4900 | 70.0 | 63.0 | 92.0 | 98.0 | 3.60 | 3.30 | 6.6 | 0.34 | 1.79 | 0.98 | 0.682 | 0.372 | **469** | **453X** |
| | 104.775 | 30.163 | 30.958 | 23.813 | 0.80 | 3.20 | **45289** | **45220** | 126 | 165 | 3700 | 4900 | 65.0 | 65.0 | 93.0 | 99.0 | 0.80 | 3.20 | 8.0 | 0.33 | 1.80 | 0.99 | 0.757 | 0.345 | **45289** | **45220** |
| | 104.775 | 30.163 | 30.958 | 23.813 | 2.40 | 3.20 | **45290** | **45220** | 126 | 165 | 3700 | 4900 | 68.0 | 65.0 | 93.0 | 99.0 | 2.40 | 3.20 | 8.0 | 0.33 | 1.80 | 0.99 | 0.755 | 0.345 | **45290** | **45220** |
| | 104.775 | 30.163 | 30.958 | 23.813 | 2.40 | 0.80 | **45290** | **45221** | 126 | 165 | 3700 | 4900 | 68.0 | 65.0 | 95.0 | 99.0 | 2.40 | 0.80 | 8.0 | 0.33 | 1.80 | 0.99 | 0.755 | 0.35 | **45290** | **45221** |
| | 110.000 | 21.999 | 21.996 | 18.824 | 2.40 | 1.20 | **390** | **394A** | 86.4 | 116 | 3400 | 4500 | 70.0 | 66.0 | 101.0 | 104.5 | 2.40 | 1.20 | 0.7 | 0.40 | 1.49 | 0.82 | 0.682 | 0.259 | **390** | **394A** |
| | 112.713 | 30.163 | 30.163 | 23.813 | 3.60 | 3.20 | **39580** | **39520** | 147 | 207 | 3300 | 4500 | 72.0 | 66.0 | 101.0 | 107.0 | 3.60 | 3.20 | 6.9 | 0.34 | 1.77 | 0.97 | 1.05 | 0.355 | **39580** | **39520** |
| | 112.713 | 30.163 | 30.163 | 23.813 | 7.90 | 3.20 | **39581** | **39520** | 147 | 207 | 3300 | 4500 | 81.0 | 66.0 | 101.0 | 107.0 | 7.90 | 3.20 | 6.9 | 0.34 | 1.77 | 0.97 | 1.03 | 0.355 | **39581** | **39520** |
| | 117.475 | 33.338 | 31.750 | 23.813 | 3.60 | 3.20 | **66225R** | **66462** | 129 | 152 | 3500 | 4600 | 76.0 | 69.0 | 100.0 | 111.0 | 3.60 | 3.20 | 0.2 | 0.63 | 0.96 | 0.53 | 1.03 | 0.547 | **66225R** | **66462** |
| | 120.650 | 41.275 | 41.275 | 31.750 | 3.60 | 3.20 | **623** | **612** | 174 | 217 | 3500 | 4600 | 72.0 | 66.0 | 105.0 | 110.0 | 3.60 | 3.20 | 14.0 | 0.31 | 1.91 | 1.05 | 1.27 | 0.853 | **623** | **612** |
| | 123.825 | 38.100 | 36.678 | 30.163 | 3.60 | 3.20 | **555S** | **552A** | 162 | 223 | 3200 | 4200 | 73.0 | 67.0 | 109.0 | 116.0 | 3.60 | 3.20 | 9.4 | 0.35 | 1.73 | 0.95 | 1.4 | 0.756 | **555S** | **552A** |
| **57.531** | 98.425 | 21.001 | 21.946 | 17.826 | 3.60 | 0.80 | **388A** | **382** | 80.4 | 101 | 3900 | 5200 | 69.0 | 63.0 | 89.0 | 92.0 | 3.60 | 0.80 | 3.6 | 0.35 | 1.69 | 0.93 | 0.421 | 0.223 | **388A** | **382** |
| **59.987** | 134.983 | 33.449 | 30.925 | 21.948 | 3.60 | 3.60 | **HM911244R** | **HM911216** | 153 | 181 | 2600 | 3700 | 84.0 | 74.0 | 112.0 | 123.0 | 3.60 | 3.60 | (7.1) | 0.82 | 0.73 | 0.40 | 1.37 | 0.806 | **HM911244R** | **HM911216** |
| | 100.000 | 25.400 | 25.400 | 19.845 | 3.60 | 3.20 | **28985** | **28921** | 91.4 | 137 | 3700 | 4900 | 73.0 | 67.0 | 89.0 | 96.0 | 3.60 | 3.20 | 2.6 | 0.43 | 1.41 | 0.78 | 0.533 | 0.230 | **28985** | **28921** |
| | 100.000 | 25.400 | 25.400 | 19.845 | 3.60 | 0.80 | **28985** | **28921A** | 91.4 | 137 | 3700 | 4900 | 73.0 | 67.0 | 91.0 | 96.0 | 3.60 | 0.80 | 2.6 | 0.43 | 1.41 | 0.78 | 0.533 | 0.235 | **28985** | **28921A** |
| | 101.600 | 25.400 | 25.400 | 19.845 | 3.60 | 3.20 | **28985** | **28920** | 91.4 | 137 | 3700 | 4900 | 73.0 | 67.0 | 89.0 | 96.0 | 3.60 | 3.20 | 2.6 | 0.43 | 1.41 | 0.78 | 0.533 | 0.269 | **28985** | **28920** |
| **60.325** | 112.713 | 30.163 | 30.048 | 23.813 | 3.60 | 3.20 | **3980** | **3920** | 111 | 164 | 3400 | 4500 | 75.0 | 68.0 | 99.0 | 106.0 | 3.60 | 3.20 | 4.3 | 0.40 | 1.49 | 0.82 | 0.853 | 0.448 | **3980** | **3920** |
| | 123.825 | 38.100 | 36.678 | 30.163 | 7.90 | 3.20 | **557A** | **552A** | 162 | 223 | 3200 | 4200 | 84.0 | 69.0 | 109.0 | 116.0 | 7.90 | 3.20 | 9.4 | 0.35 | 1.73 | 0.95 | 1.3 | 0.756 | **557A** | **552A** |
| | 127.000 | 44.450 | 44.450 | 34.925 | 3.60 | 3.20 | **65237** | **65500** | 208 | 269 | 3300 | 4400 | 82.0 | 71.0 | 107.0 | 119.0 | 3.60 | 3.20 | 9.3 | 0.49 | 1.23 | 0.68 | 1.58 | 1.02 | **65237** | **65500** |
| | 136.525 | 46.038 | 46.038 | 36.513 | 3.60 | 3.20 | **H715332** | **H715311** | 231 | 369 | 2800 | 3700 | 84.0 | 78.0 | 118.0 | 132.0 | 3.60 | 3.20 | 9.0 | 0.47 | 1.27 | 0.70 | 2.56 | 0.950 | **H715332** | **H715311** |
| **61.913** | 110.000 | 21.999 | 21.996 | 18.824 | 0.80 | 1.20 | **392** | **394A** | 86.4 | 116 | 3400 | 4500 | 70.0 | 69.0 | 101.0 | 104.5 | 0.80 | 1.20 | 0.7 | 0.40 | 1.49 | 0.82 | 0.605 | 0.259 | **392** | **394A** |

Note: (1) Minus value of load center “a” indicates that the center is located outside of cone backface.

# Tapered Roller Bearings

## Inch Series

Bore Diameter: 63.500～68.263mm

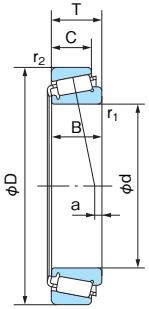


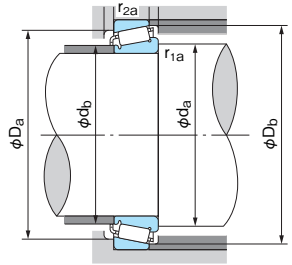


**■Dynamic equivalent radial load**

Pr=XFr+YFa

| $\frac{Fa}{Fr} \leqq e$ | | $\frac{Fa}{Fr} > e$ | |
|---|---|---|---|
| X | Y | X | Y |
| 1 | 0 | 0.4 | $Y_1$ |

Values e and $Y_1$ from table.

**■Static equivalent radial load**

Larger value of following to be used:

Por=0.5Fr+$Y_0$Fa

Por=Fr

Values $Y_0$ from table.

1N=0.102kgf

| Boundary dimensions (mm) | | | | | | | Bearing No. | | Basic load rating | | Limiting speed ($min^{-1}$) | | Abutment and fillet dimensions (mm) | | | | | | Load center (mm) | Constant | Axial load factor | | Mass(kg) Reference | | Bearing No. | |
|---|---|---|---|---|---|---|---|---|---|---|---|---|---|---|---|---|---|---|---|---|---|---|---|---|---|---|
| d | D | T | B | C | $r_1$ (min) | $r_2$ (min) | Cone | Cup | Cr (kN) | Cor (kN) | Grease | Oil | da | db | Da | Db | $r_{1a}$ | $r_{2a}$ | a (1) | e | $Y_1$ | $Y_0$ | Cone | Cup | Cone | Cup |
| 63.500 | 107.950 | 25.400 | 25.400 | 19.050 | 3.60 | 3.20 | **29585** | **29520** | 92.8 | 143 | 3400 | 4500 | 77.0 | 71.0 | 96.0 | 103.0 | 3.60 | 3.20 | 0.7 | 0.46 | 1.31 | 0.72 | 0.644 | 0.277 | **29585** | **29520** |
| | 107.950 | 25.400 | 25.400 | 19.050 | 1.60 | 0.80 | **29586** | **29522** | 92.8 | 143 | 3400 | 4500 | 73.0 | 71.0 | 98.0 | 103.0 | 1.60 | 0.80 | 0.7 | 0.46 | 1.31 | 0.72 | 0.651 | 0.282 | **29586** | **29522** |
| | 110.000 | 21.999 | 21.996 | 18.824 | 1.60 | 1.20 | **390A** | **394A** | 86.4 | 116 | 3400 | 4500 | 73.0 | 70.0 | 101.0 | 104.5 | 1.60 | 1.20 | 0.7 | 0.40 | 1.49 | 0.82 | 0.579 | 0.259 | **390A** | **394A** |
| | 110.000 | 21.999 | 21.996 | 18.824 | 3.60 | 1.20 | **395** | **394A** | 86.4 | 116 | 3400 | 4500 | 77.0 | 70.0 | 101.0 | 104.5 | 3.60 | 1.20 | 0.7 | 0.40 | 1.49 | 0.82 | 0.575 | 0.259 | **395** | **394A** |
| | 110.000 | 25.400 | 25.400 | 19.050 | 3.60 | 1.20 | **29585** | **29521** | 92.8 | 143 | 3400 | 4500 | 77.0 | 71.0 | 99.0 | 104.0 | 3.60 | 1.20 | 0.7 | 0.46 | 1.31 | 0.72 | 0.644 | 0.333 | **29585** | **29521** |
| | 112.713 | 30.163 | 30.048 | 23.813 | 3.60 | 3.20 | **3982** | **3920** | 111 | 164 | 3400 | 4500 | 77.0 | 71.0 | 99.0 | 106.0 | 3.60 | 3.20 | 4.3 | 0.40 | 1.49 | 0.82 | 0.776 | 0.448 | **3982** | **3920** |
| | 112.713 | 30.163 | 30.163 | 23.813 | 3.60 | 3.20 | **39585** | **39520** | 147 | 207 | 3300 | 4500 | 77.0 | 71.0 | 101.0 | 107.0 | 3.60 | 3.20 | 6.9 | 0.34 | 1.77 | 0.97 | 0.908 | 0.355 | **39585** | **39520** |
| | 122.238 | 38.100 | 38.354 | 29.718 | 7.10 | 3.20 | **HM212047UR** | **HM212011UR** | 191 | 249 | 3200 | 4300 | 87.0 | 73.0 | 108.0 | 116.0 | 7.10 | 3.20 | 10.8 | 0.34 | 1.78 | 0.98 | 1.36 | 0.595 | **HM212047UR** | **HM212011UR** |
| | 123.825 | 38.100 | 36.678 | 30.163 | 3.60 | 3.20 | **559** | **552A** | 162 | 223 | 3200 | 4200 | 78.0 | 72.0 | 109.0 | 116.0 | 3.60 | 3.20 | 9.4 | 0.35 | 1.73 | 0.95 | 1.23 | 0.756 | **559** | **552A** |
| | 136.525 | 41.275 | 41.275 | 31.750 | 3.60 | 3.20 | **639** | **632** | 197 | 267 | 3000 | 3900 | 81.0 | 74.0 | 118.0 | 125.0 | 3.60 | 3.20 | 11.0 | 0.36 | 1.66 | 0.91 | 1.75 | 1.03 | **639** | **632** |
| 65.000 | 105.000 | 24.000 | 23.000 | 18.500 | 3.00 | 1.00 | **JLM710949UR** | **JLM710910UR** | 95.3 | 129 | 3500 | 4700 | 77.0 | 71.0 | 96.0 | 100.5 | 3.00 | 1.00 | 0.3 | 0.45 | 1.32 | 0.73 | 0.513 | 0.234 | **JLM710949UR** | **JLM710910UR** |
| | 110.000 | 28.000 | 28.000 | 22.500 | 3.00 | 2.50 | **JM511946E** | **JM511910E** | 136 | 191 | 3400 | 4600 | 78.0 | 72.0 | 99.0 | 105.0 | 3.00 | 2.50 | 4.0 | 0.40 | 1.49 | 0.82 | 0.733 | 0.338 | **JM511946E** | **JM511910E** |
| | 120.000 | 39.000 | 38.500 | 32.000 | 3.00 | 2.50 | **JH211749E** | **JH211710E** | 189 | 255 | 3200 | 4300 | 80.0 | 74.0 | 107.0 | 114.0 | 3.00 | 2.50 | 11.1 | 0.34 | 1.78 | 0.98 | 1.27 | 0.618 | **JH211749E** | **JH211710E** |
| 65.088 | 135.755 | 53.975 | 56.007 | 44.450 | 3.60 | 3.20 | **6379** | **6320** | 266 | 357 | 3000 | 4000 | 84.0 | 77.5 | 117.0 | 126.0 | 3.60 | 3.20 | 19.2 | 0.32 | 1.85 | 1.02 | 2.34 | 1.37 | **6379** | **6320** |
| 66.675 | 107.950 | 25.400 | 25.400 | 19.050 | 3.60 | 3.20 | **29590** | **29520** | 92.8 | 143 | 3400 | 4500 | 80.0 | 73.0 | 96.0 | 103.0 | 3.60 | 3.20 | 0.7 | 0.46 | 1.31 | 0.72 | 0.582 | 0.277 | **29590** | **29520** |
| | 107.950 | 25.400 | 25.400 | 19.050 | 3.60 | 0.80 | **29590** | **29522** | 92.8 | 143 | 3400 | 4500 | 80.0 | 73.0 | 96.0 | 103.0 | 3.60 | 0.80 | 0.7 | 0.46 | 1.31 | 0.72 | 0.582 | 0.282 | **29590** | **29522** |
| | 110.000 | 21.999 | 21.996 | 18.824 | 0.80 | 1.20 | **395A** | **394A** | 86.4 | 116 | 3400 | 4500 | 73.0 | 73.0 | 101.0 | 104.5 | 0.80 | 1.20 | 0.7 | 0.40 | 1.49 | 0.82 | 0.524 | 0.259 | **395A** | **394A** |
| | 110.000 | 21.999 | 21.996 | 18.824 | 3.60 | 1.20 | **395S** | **394A** | 86.4 | 116 | 3400 | 4500 | 79.0 | 73.0 | 101.0 | 104.5 | 3.60 | 1.20 | 0.7 | 0.40 | 1.49 | 0.82 | 0.519 | 0.259 | **395S** | **394A** |
| | 110.000 | 25.400 | 25.400 | 19.050 | 3.60 | 1.20 | **29590** | **29521** | 92.8 | 143 | 3400 | 4500 | 80.0 | 73.0 | 99.0 | 104.0 | 3.60 | 1.20 | 0.7 | 0.46 | 1.31 | 0.72 | 0.582 | 0.333 | **29590** | **29521** |
| | 112.713 | 30.163 | 30.048 | 23.813 | 3.60 | 3.20 | **3984** | **3920** | 111 | 164 | 3400 | 4500 | 80.0 | 74.0 | 99.0 | 106.0 | 3.60 | 3.20 | 4.3 | 0.40 | 1.49 | 0.82 | 0.705 | 0.448 | **3984** | **3920** |
| | 112.713 | 30.163 | 30.048 | 23.813 | 5.60 | 3.20 | **3994** | **3920** | 111 | 164 | 3400 | 4500 | 84.0 | 74.0 | 99.0 | 106.0 | 5.60 | 3.20 | 4.3 | 0.40 | 1.49 | 0.82 | 0.698 | 0.448 | **3994** | **3920** |
| | 112.713 | 30.163 | 30.163 | 23.813 | 3.60 | 3.20 | **39590** | **39520** | 147 | 207 | 3300 | 4500 | 80.0 | 74.0 | 101.0 | 107.0 | 3.60 | 3.20 | 6.9 | 0.34 | 1.77 | 0.97 | 0.832 | 0.355 | **39590** | **39520** |
| | 117.475 | 30.163 | 30.163 | 23.813 | 3.60 | 3.20 | **33262** | **33462** | 118 | 179 | 3200 | 4200 | 81.0 | 75.0 | 104.0 | 112.0 | 3.60 | 3.20 | 2.4 | 0.44 | 1.38 | 0.76 | 0.910 | 0.436 | **33262** | **33462** |
| | 122.238 | 38.100 | 38.354 | 29.718 | 3.60 | 1.60 | **HM212049** | **HM212010** | 191 | 249 | 3200 | 4300 | 82.0 | 75.5 | 110.0 | 116.0 | 3.60 | 1.60 | 10.8 | 0.34 | 1.78 | 0.98 | 1.26 | 0.596 | **HM212049** | **HM212010** |
| | 122.238 | 38.100 | 38.354 | 29.718 | 3.60 | 3.20 | **HM212049** | **HM212011** | 191 | 249 | 3200 | 4300 | 82.0 | 75.5 | 108.0 | 116.0 | 3.60 | 3.20 | 10.8 | 0.34 | 1.78 | 0.98 | 1.26 | 0.591 | **HM212049** | **HM212011** |
| | 123.825 | 38.100 | 36.678 | 30.163 | 3.60 | 3.20 | **560** | **552A** | 162 | 223 | 3200 | 4200 | 81.0 | 75.0 | 109.0 | 116.0 | 3.60 | 3.20 | 9.4 | 0.35 | 1.73 | 0.95 | 1.13 | 0.756 | **560** | **552A** |
| | 136.525 | 41.275 | 41.275 | 31.750 | 3.60 | 3.20 | **641** | **632** | 197 | 267 | 3000 | 3900 | 83.0 | 77.0 | 116.0 | 124.0 | 3.60 | 3.20 | 11.0 | 0.36 | 1.66 | 0.91 | 1.64 | 1.03 | **641** | **632** |
| | 135.755 | 53.975 | 56.007 | 44.450 | 4.30 | 3.20 | **6386** | **6320** | 266 | 357 | 3000 | 4000 | 87.0 | 77.5 | 117.0 | 126.0 | 4.30 | 3.20 | 19.2 | 0.32 | 1.85 | 1.02 | 2.27 | 1.37 | **6386** | **6320** |
| | 136.525 | 46.038 | 46.038 | 36.513 | 3.60 | 3.20 | **H715341** | **H715311** | 231 | 369 | 2800 | 3700 | 89.0 | 83.0 | 118.0 | 132.0 | 3.60 | 3.20 | 9.0 | 0.47 | 1.27 | 0.70 | 2.33 | 0.95 | **H715341** | **H715311** |
| 68.263 | 110.000 | 21.999 | 21.996 | 18.824 | 2.40 | 1.20 | **399A** | **394A** | 86.4 | 116 | 3400 | 4500 | 78.0 | 74.0 | 101.0 | 104.5 | 2.40 | 1.20 | 0.7 | 0.40 | 1.49 | 0.82 | 0.493 | 0.259 | **399A** | **394A** |
| | 110.000 | 21.999 | 21.996 | 18.824 | 5.20 | 1.20 | **399AS** | **394A** | 86.4 | 116 | 3400 | 4500 | 83.0 | 74.0 | 101.0 | 104.5 | 5.20 | 1.20 | 0.7 | 0.40 | 1.49 | 0.82 | 0.485 | 0.259 | **399AS** | **394A** |
| | 120.000 | 29.794 | 29.007 | 24.237 | 3.60 | 2.00 | **480** | **472** | 118 | 161 | 3200 | 4200 | 82.0 | 75.0 | 108.0 | 113.0 | 3.60 | 2.00 | 4.1 | 0.38 | 1.56 | 0.86 | 0.833 | 0.487 | **480** | **472** |
| | 123.825 | 38.100 | 36.678 | 30.163 | 3.60 | 3.20 | **560S** | **552A** | 162 | 223 | 3200 | 4200 | 83.0 | 76.0 | 109.0 | 116.0 | 3.60 | 3.20 | 9.4 | 0.35 | 1.73 | 0.95 | 1.09 | 0.756 | **560S** | **552A** |
| | 136.525 | 41.275 | 41.275 | 31.750 | 3.60 | 3.20 | **H414245.** | **H414210.** | 241 | 308 | 2900 | 3800 | 86.0 | 82.0 | 121.0 | 129.0 | 3.60 | 3.20 | 11.0 | 0.36 | 1.67 | 0.92 | 1.92 | 0.788 | **H414245.** | **H414210.** |

Note: (1) Minus value of load center "a" indicates that the center is located outside of cone backface.

# Tapered Roller Bearings

## Inch Series

Bore Diameter: 69.850～75,000mm

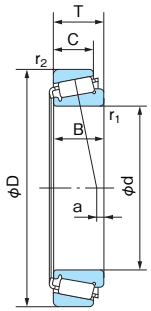


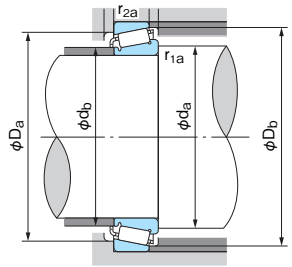


**■Dynamic equivalent radial load**

Pr=XFr+YFa

| $\frac{Fa}{Fr} \leqq e$ | | $\frac{Fa}{Fr} > e$ | |
|---|---|---|---|
| X | Y | X | Y |
| 1 | 0 | 0.4 | $Y_1$ |

Values e and $Y_1$ from table.

**■Static equivalent radial load**

Larger value of following to be used:

$P_{or}=0.5F_r+Y_0F_a$

$P_{or}=F_r$

Values $Y_0$ from table.

1N=0.102kgf

| Boundary dimensions (mm) | | | | | | | Bearing No. | | Basic load rating | | Limiting speed (min-1) | | Abutment and fillet dimensions (mm) | | | | | | Load center (mm) | Constant | Axial load factor | | Mass(kg) Reference | | Bearing No. | |
|---|---|---|---|---|---|---|---|---|---|---|---|---|---|---|---|---|---|---|---|---|---|---|---|---|---|---|
| d | D | T | B | C | $r_1$ (min) | $r_2$ (min) | Cone | Cup | Cr (kN) | Cor (kN) | Grease | Oil | da | db | Da | Db | $r_{1a}$ | $r_{2a}$ | a (1) | e | $Y_1$ | $Y_0$ | Cone | Cup | Cone | Cup |
| 69.850 | 112.713 | 25.400 | 25.400 | 19.050 | 1.60 | 3.20 | **29675** | **29620** | 97 | 155 | 3200 | 4300 | 80.0 | 77.0 | 101.0 | 109.0 | 1.60 | 3.20 | (0.8) | 0.49 | 1.23 | 0.68 | 0.676 | 0.27 | **29675** | **29620** |
| | 117.475 | 30.163 | 30.163 | 23.813 | 3.60 | 3.20 | **33275** | **33462** | 118 | 179 | 3200 | 4200 | 84.0 | 77.0 | 104.0 | 112.0 | 3.60 | 3.20 | 2.4 | 0.44 | 1.38 | 0.76 | 0.830 | 0.436 | **33275** | **33462** |
| | 120.000 | 29.794 | 29.007 | 24.237 | 3.60 | 2.00 | **482** | **472** | 118 | 161 | 3200 | 4200 | 83.0 | 77.0 | 108.0 | 113.0 | 3.60 | 2.00 | 4.1 | 0.38 | 1.56 | 0.86 | 0.791 | 0.487 | **482** | **472** |
| | 120.000 | 29.794 | 30.163 | 23.444 | 3.60 | 0.80 | **33275** | **33472** | 118 | 179 | 3200 | 4200 | 84.0 | 77.0 | 107.0 | 113.0 | 3.60 | 0.80 | 2.4 | 0.44 | 1.38 | 0.76 | 0.832 | 0.517 | **33275** | **33472** |
| | 120.000 | 32.545 | 32.545 | 26.195 | 3.60 | 3.20 | **47487R** | **47420** | 150 | 218 | 3100 | 4200 | 84.0 | 78.0 | 107.0 | 114.0 | 3.60 | 3.20 | 6.0 | 0.36 | 1.67 | 0.92 | 1.01 | 0.476 | **47487R** | **47420** |
| | 127.000 | 36.513 | 36.170 | 28.575 | 3.60 | 3.20 | **566** | **563** | 156 | 226 | 3000 | 4000 | 85.0 | 78.0 | 112.0 | 120.0 | 3.60 | 3.20 | 7.9 | 0.36 | 1.65 | 0.91 | 1.24 | 0.648 | **566** | **563** |
| | 136.525 | 41.275 | 41.275 | 31.750 | 3.60 | 3.20 | **643** | **632** | 197 | 267 | 3000 | 3900 | 86.0 | 80.0 | 118.0 | 125.0 | 3.60 | 3.20 | 11.0 | 0.36 | 1.66 | 0.91 | 1.53 | 1.03 | **643** | **632** |
| | 146.050 | 41.275 | 39.688 | 25.400 | 3.60 | 3.20 | **H913849R.F** | **H913810.F** | 202 | 237 | 2300 | 3300 | 95.0 | 82.5 | 124.0 | 138.0 | 3.60 | 3.20 | (4.0) | 0.78 | 0.77 | 0.42 | 2.06 | 0.9 | **H913849R.F** | **H913810.F** |
| 70.000 | 110.000 | 26.000 | 25.000 | 20.500 | 1.00 | 2.50 | **JLM813049** | **JLM813010** | 103 | 158 | 3300 | 4400 | 78.0 | 77.0 | 98.0 | 105.0 | 1.00 | 2.50 | (0.2) | 0.49 | 1.23 | 0.68 | 0.590 | 0.300 | **JLM813049** | **JLM813010** |
| | 115.000 | 29.000 | 29.000 | 23.000 | 3.00 | 2.50 | **JM612949** | **JM612910** | 123 | 173 | 3200 | 4300 | 83.0 | 77.0 | 103.0 | 110.0 | 3.00 | 2.50 | 2.8 | 0.43 | 1.39 | 0.77 | 0.776 | 0.358 | **JM612949** | **JM612910** |
| | 120.000 | 29.794 | 29.007 | 24.237 | 2.00 | 2.00 | **484** | **472** | 118 | 161 | 3200 | 4200 | 80.0 | 77.0 | 108.0 | 113.0 | 2.00 | 2.00 | 4.1 | 0.38 | 1.56 | 0.86 | 0.791 | 0.487 | **484** | **472** |
| 71.438 | 117.475 | 30.163 | 30.163 | 23.813 | 3.60 | 3.20 | **33281** | **33462** | 118 | 179 | 3200 | 4200 | 85.0 | 79.0 | 104.0 | 112.0 | 3.60 | 3.20 | 2.4 | 0.44 | 1.38 | 0.76 | 0.789 | 0.436 | **33281** | **33462** |
| | 120.000 | 29.794 | 30.163 | 23.444 | 3.60 | 0.80 | **33281** | **33472** | 118 | 179 | 3200 | 4200 | 85.0 | 79.0 | 107.0 | 113.0 | 3.60 | 0.80 | 2.4 | 0.44 | 1.38 | 0.76 | 0.789 | 0.518 | **33281** | **33472** |
| | 120.000 | 32.545 | 32.545 | 26.195 | 3.60 | 3.20 | **47490R** | **47420** | 150 | 218 | 3100 | 4200 | 86.0 | 79.0 | 107.0 | 114.0 | 3.60 | 3.20 | 6.0 | 0.36 | 1.67 | 0.92 | 0.964 | 0.476 | **47490R** | **47420** |
| | 136.525 | 41.275 | 41.275 | 31.750 | 6.40 | 3.20 | **645** | **632** | 197 | 267 | 3000 | 3900 | 93.0 | 81.0 | 118.0 | 125.0 | 6.40 | 3.20 | 11.0 | 0.36 | 1.66 | 0.91 | 1.46 | 1.03 | **645** | **632** |
| | 136.525 | 41.275 | 41.275 | 31.750 | 3.60 | 3.20 | **H414249.** | **H414210.** | 241 | 308 | 2900 | 3800 | 89.0 | 83.3 | 121.0 | 129.0 | 3.60 | 3.20 | 11.0 | 0.36 | 1.67 | 0.92 | 1.80 | 0.788 | **H414249.** | **H414210.** |
| | 136.525 | 46.038 | 46.038 | 36.513 | 3.60 | 3.20 | **H715345** | **H715311** | 231 | 369 | 2800 | 3700 | 93.0 | 87.0 | 118.0 | 132.0 | 3.60 | 3.20 | 9.0 | 0.47 | 1.27 | 0.70 | 2.15 | 0.95 | **H715345** | **H715311** |
| 73.025 | 112.713 | 25.400 | 25.400 | 19.050 | 3.60 | 3.20 | **29685** | **29620** | 97 | 155 | 3200 | 4300 | 86.0 | 80.0 | 101.0 | 109.0 | 3.60 | 3.20 | (0.8) | 0.49 | 1.23 | 0.68 | 0.602 | 0.27 | **29685** | **29620** |
| | 117.475 | 30.163 | 30.163 | 23.813 | 3.60 | 3.20 | **33287** | **33462** | 118 | 179 | 3200 | 4200 | 87.0 | 80.0 | 104.0 | 112.0 | 3.60 | 3.20 | 2.4 | 0.44 | 1.38 | 0.76 | 0.747 | 0.436 | **33287** | **33462** |
| | 120.000 | 29.794 | 30.163 | 23.444 | 3.60 | 0.80 | **33287** | **33472** | 118 | 179 | 3200 | 4200 | 87.0 | 80.0 | 107.0 | 113.0 | 3.60 | 0.80 | 2.4 | 0.44 | 1.38 | 0.76 | 0.747 | 0.518 | **33287** | **33472** |
| | 127.000 | 36.513 | 36.170 | 28.575 | 3.60 | 3.20 | **567** | **563** | 156 | 226 | 3000 | 4000 | 88.0 | 81.0 | 112.0 | 120.0 | 3.60 | 3.20 | 7.9 | 0.36 | 1.65 | 0.91 | 1.14 | 0.648 | **567** | **563** |
| | 139.992 | 36.513 | 36.098 | 28.575 | 3.60 | 3.20 | **576R** | **572** | 175 | 262 | 2700 | 3600 | 90.0 | 83.0 | 125.0 | 133.0 | 3.60 | 3.20 | 5.5 | 0.40 | 1.49 | 0.82 | 1.74 | 0.779 | **576R** | **572** |
| 75.000 | 115.000 | 25.000 | 25.000 | 19.000 | 3.00 | 2.50 | **JLM714149E** | **JLM714110E** | 101 | 151 | 3100 | 4200 | 87.0 | 81.0 | 104.0 | 110.0 | 3.00 | 2.50 | (0.5) | 0.46 | 1.31 | 0.72 | 0.612 | 0.269 | **JLM714149E** | **JLM714110E** |
| | 120.000 | 31.000 | 29.500 | 25.000 | 3.00 | 2.50 | **JM714249** | **JM714210** | 145 | 216 | 3100 | 4100 | 88.0 | 82.9 | 108.0 | 115.0 | 3.00 | 2.50 | 3.0 | 0.44 | 1.35 | 0.74 | 0.846 | 0.43 | **JM714249** | **JM714210** |
| | 145.000 | 51.000 | 51.000 | 42.000 | 3.00 | 2.50 | **JH415647** | **JH415610** | 290 | 412 | 2700 | 3600 | 94.0 | 89.0 | 129.0 | 139.0 | 3.00 | 2.50 | 14.4 | 0.36 | 1.60 | 0.91 | 2.66 | 1.18 | **JH415647** | **JH415610** |

Note: (1) Minus value of load center "a" indicates that the center is located outside of cone backface.

# Tapered Roller Bearings

## Inch Series

Bore Diameter: 76.200～84.975mm

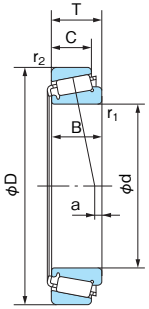


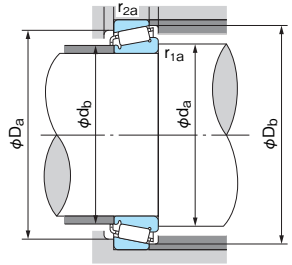


**■Dynamic equivalent radial load**

Pr=XFr+YFa

| $\frac{Fa}{Fr} \leqq e$ | | $\frac{Fa}{Fr} > e$ | |
|---|---|---|---|
| X | Y | X | Y |
| 1 | 0 | 0.4 | $Y_1$ |

Values e and $Y_1$ from table.

**■Static equivalent radial load**

Larger value of following to be used:

Por=0.5Fr+$Y_0$Fa

Por=Fr

Values $Y_0$ from table.

1N=0.102kgf

| Boundary dimensions (mm) | | | | | | | Bearing No. | | Basic load rating | | Limiting speed ($min^{-1}$) | | Abutment and fillet dimensions (mm) | | | | | | Load center (mm) | Constant | Axial load factor | | Mass(kg) Reference | | Bearing No. | |
|---|---|---|---|---|---|---|---|---|---|---|---|---|---|---|---|---|---|---|---|---|---|---|---|---|---|---|
| d | D | T | B | C | $r_1$ (min) | $r_2$ (min) | Cone | Cup | Cr (kN) | Cor (kN) | Grease | Oil | da | db | Da | Db | $r_{1a}$ | $r_{2a}$ | a (1) | e | $Y_1$ | $Y_0$ | Cone | Cup | Cone | Cup |
| 76.200 | 121.442 | 24.608 | 23.012 | 17.463 | 2.00 | 2.00 | **34300** | **34478** | 90 | 127 | 3000 | 4000 | 86.0 | 83.0 | 110.0 | 116.0 | 2.00 | 2.00 | (2.2) | 0.45 | 1.33 | 0.73 | 0.622 | 0.312 | **34300** | **34478** |
| | 127.000 | 26.988 | 23.012 | 19.842 | 2.00 | 3.20 | **34300** | **34500** | 90 | 127 | 3000 | 4000 | 86.0 | 83.0 | 118.0 | 112.0 | 2.00 | 3.20 | (2.2) | 0.45 | 1.33 | 0.73 | 0.622 | 0.536 | **34300** | **34500** |
| | 127.000 | 30.163 | 31.001 | 22.225 | 6.40 | 3.20 | **42688** | **42620** | 143 | 225 | 2400 | 3200 | 96.0 | 84.0 | 114.0 | 121.0 | 6.40 | 3.20 | 3.1 | 0.42 | 1.43 | 0.79 | 1.04 | 0.434 | **42688** | **42620** |
| | 133.350 | 33.338 | 33.338 | 26.195 | 6.40 | 3.20 | **47678** | **47620** | 145 | 226 | 2700 | 3700 | 97.0 | 90.0 | 119.0 | 128.0 | 6.40 | 3.20 | 4.2 | 0.40 | 1.48 | 0.82 | 1.31 | 0.571 | **47678** | **47620** |
| | 133.350 | 33.338 | 33.338 | 26.195 | 3.60 | 3.20 | **47679** | **47620** | 145 | 226 | 2700 | 3700 | 91.0 | 85.0 | 119.0 | 128.0 | 3.60 | 3.20 | 4.2 | 0.40 | 1.48 | 0.82 | 1.32 | 0.571 | **47679** | **47620** |
| | 135.733 | 44.450 | 46.101 | 34.925 | 3.60 | 3.20 | **5760** | **5735** | 213 | 337 | 2800 | 3700 | 94.0 | 88.0 | 119.0 | 130.0 | 3.60 | 3.20 | 11.5 | 0.41 | 1.48 | 0.81 | 1.85 | 0.877 | **5760** | **5735** |
| | 136.525 | 30.163 | 29.769 | 22.225 | 3.60 | 3.20 | **495A** | **493** | 133 | 198 | 2700 | 3600 | 92.0 | 86.0 | 122.0 | 130.0 | 3.60 | 3.20 | 0.3 | 0.44 | 1.35 | 0.74 | 1.26 | 0.544 | **495A** | **493** |
| | 136.525 | 30.163 | 29.769 | 22.225 | 6.40 | 3.20 | **495AX** | **493** | 133 | 198 | 2700 | 3600 | 98.0 | 86.0 | 122.0 | 130.0 | 6.40 | 3.20 | 0.3 | 0.44 | 1.35 | 0.74 | 1.25 | 0.544 | **495AX** | **493** |
| | 139.992 | 36.513 | 36.098 | 28.575 | 3.60 | 3.20 | **575R** | **572** | 175 | 262 | 2700 | 3600 | 92.0 | 86.0 | 125.0 | 133.0 | 3.60 | 3.20 | 5.5 | 0.40 | 1.49 | 0.82 | 1.64 | 0.779 | **575R** | **572** |
| | 146.050 | 41.275 | 41.275 | 31.750 | 3.60 | 3.20 | **659** | **653** | 208 | 301 | 2600 | 3400 | 93.0 | 87.0 | 131.0 | 139.0 | 3.60 | 3.20 | 7.7 | 0.41 | 1.47 | 0.81 | 2.16 | 0.880 | **659** | **653** |
| | 152.400 | 41.275 | 41.275 | 31.750 | 3.60 | 3.20 | **659** | **652** | 208 | 301 | 2600 | 3400 | 93.0 | 87.0 | 134.0 | 141.0 | 3.60 | 3.20 | 7.7 | 0.41 | 1.47 | 0.81 | 2.16 | 1.25 | **659** | **652** |
| | 161.925 | 49.213 | 46.038 | 31.750 | 3.60 | 3.20 | **9285R** | **9220** | 246 | 286 | 2100 | 2900 | 103.0 | 90.5 | 138.0 | 153.0 | 3.60 | 3.20 | (1.0) | 0.71 | 0.85 | 0.47 | 3.01 | 1.38 | **9285R** | **9220** |
| | 161.925 | 47.625 | 48.260 | 38.100 | 3.60 | 3.20 | **755** | **752** | 273 | 391 | 2400 | 3200 | 95.0 | 88.0 | 144.0 | 150.0 | 3.60 | 3.20 | 12.1 | 0.34 | 1.76 | 0.97 | 3.12 | 1.59 | **755** | **752** |
| 77.788 | 117.475 | 25.400 | 25.400 | 19.050 | 3.60 | 3.20 | **LM814849** | **LM814810** | 101 | 166 | 3100 | 4100 | 91.0 | 85.0 | 105.0 | 113.0 | 3.60 | 3.20 | (2.2) | 0.51 | 1.18 | 0.65 | 0.619 | 0.295 | **LM814849** | **LM814810** |
| | 127.000 | 30.163 | 31.001 | 22.225 | 3.60 | 3.20 | **42690** | **42620** | 142 | 209 | 2400 | 3200 | 91.0 | 85.0 | 114.0 | 121.0 | 3.60 | 3.20 | 3.1 | 0.42 | 1.43 | 0.79 | 1.00 | 0.434 | **42690** | **42620** |
| 79.375 | 190.500 | 57.150 | 57.531 | 46.038 | 3.60 | 3.20 | **HH221431** | **HH221410** | 440 | 602 | 2000 | 2700 | 103.0 | 97.0 | 171.0 | 179.0 | 3.60 | 3.20 | 14.7 | 0.33 | 1.79 | 0.99 | 6.16 | 2.21 | **HH221431** | **HH221410** |
| 80.000 | 130.000 | 35.000 | 34.000 | 28.500 | 3.00 | 2.50 | **JM515649** | **JM515610** | 168 | 256 | 2800 | 3800 | 94.0 | 88.0 | 117.0 | 125.0 | 3.20 | 2.50 | 5.4 | 0.39 | 1.54 | 0.85 | 1.19 | 0.575 | **JM515649** | **JM515610** |
| 80.963 | 136.525 | 30.163 | 29.769 | 22.225 | 3.60 | 3.20 | **496** | **493** | 133 | 198 | 2700 | 3600 | 95.0 | 89.0 | 122.0 | 130.0 | 3.60 | 3.20 | 0.3 | 0.44 | 1.35 | 0.74 | 1.12 | 0.544 | **496** | **493** |
| | 150.089 | 44.450 | 46.673 | 36.513 | 5.20 | 3.20 | **740R** | **742** | 264 | 368 | 2500 | 3400 | 101.0 | 91.0 | 134.0 | 142.0 | 5.20 | 3.20 | 12.0 | 0.33 | 1.84 | 1.01 | 2.30 | 1.06 | **740R** | **742** |
| 82.550 | 125.413 | 25.400 | 25.400 | 19.845 | 3.60 | 1.60 | **27687** | **27620** | 101 | 162 | 2900 | 3800 | 96.0 | 89.0 | 115.0 | 120.0 | 3.60 | 1.60 | 0.7 | 0.42 | 1.44 | 0.79 | 0.710 | 0.344 | **27687** | **27620** |
| | 133.350 | 30.163 | 29.769 | 22.225 | 3.60 | 3.20 | **495** | **492A** | 133 | 198 | 2700 | 3600 | 97.0 | 90.0 | 120.0 | 128.0 | 3.60 | 3.20 | 0.3 | 0.44 | 1.35 | 0.74 | 1.08 | 0.429 | **495** | **492A** |
| | 133.350 | 33.338 | 33.338 | 26.195 | 3.60 | 3.20 | **47686** | **47620** | 145 | 226 | 2700 | 3700 | 97.0 | 90.0 | 119.0 | 128.0 | 3.60 | 3.20 | 4.2 | 0.40 | 1.48 | 0.82 | 1.12 | 0.571 | **47686** | **47620** |
| | 133.350 | 33.338 | 33.338 | 26.195 | 6.70 | 3.20 | **47687** | **47620** | 145 | 226 | 2700 | 3700 | 103.0 | 90.0 | 119.0 | 128.0 | 6.70 | 3.20 | 4.2 | 0.40 | 1.48 | 0.82 | 1.1 | 0.571 | **47687** | **47620** |
| | 133.350 | 39.688 | 39.688 | 32.545 | 3.60 | 3.20 | **HM516449** | **HM516410** | 177 | 306 | 2800 | 3700 | 99.0 | 92.0 | 118.0 | 128.0 | 3.60 | 3.20 | 7.5 | 0.40 | 1.49 | 0.82 | 1.34 | 0.762 | **HM516449** | **HM516410** |
| | 136.525 | 30.163 | 29.769 | 22.225 | 3.60 | 3.20 | **495** | **493** | 133 | 198 | 2700 | 3600 | 97.0 | 90.0 | 122.0 | 130.0 | 3.60 | 3.20 | 0.3 | 0.44 | 1.35 | 0.74 | 1.08 | 0.544 | **495** | **493** |
| | 139.992 | 36.513 | 36.098 | 28.575 | 3.60 | 3.20 | **580R** | **572** | 175 | 262 | 2700 | 3600 | 98.0 | 91.0 | 125.0 | 133.0 | 3.60 | 3.20 | 5.5 | 0.40 | 1.49 | 0.82 | 1.41 | 0.779 | **580R** | **572** |
| | 146.050 | 41.275 | 41.275 | 31.750 | 3.60 | 3.30 | **663** | **653** | 208 | 301 | 2600 | 3400 | 99.0 | 92.0 | 131.0 | 139.0 | 3.60 | 3.30 | 7.7 | 0.41 | 1.47 | 0.81 | 1.91 | 0.880 | **663** | **653** |
| | 150.089 | 44.450 | 46.673 | 36.513 | 3.60 | 3.20 | **749AR** | **742** | 264 | 368 | 2500 | 3400 | 99.0 | 93.0 | 134.0 | 142.0 | 3.60 | 3.20 | 12.0 | 0.33 | 1.84 | 1.01 | 2.23 | 1.06 | **749AR** | **742** |
| | 152.400 | 41.275 | 41.275 | 31.750 | 3.60 | 3.20 | **663** | **652** | 208 | 301 | 2600 | 3400 | 99.0 | 92.0 | 134.0 | 141.0 | 3.60 | 3.20 | 7.7 | 0.41 | 1.47 | 0.81 | 1.91 | 1.25 | **663** | **652** |
| 83.345 | 125.413 | 25.400 | 25.400 | 19.845 | 3.60 | 1.60 | **27690** | **27620** | 101 | 162 | 2900 | 3800 | 96.0 | 90.0 | 115.0 | 120.0 | 3.60 | 1.60 | 0.7 | 0.42 | 1.44 | 0.79 | 0.689 | 0.344 | **27690** | **27620** |
| 84.138 | 136.525 | 30.163 | 29.769 | 22.225 | 3.60 | 3.20 | **498** | **493** | 133 | 198 | 2700 | 3600 | 98.0 | 91.0 | 122.0 | 130.0 | 3.60 | 3.20 | 0.3 | 0.44 | 1.35 | 0.74 | 1.03 | 0.544 | **498** | **493** |
| | 152.400 | 41.275 | 41.275 | 31.750 | 3.60 | 3.20 | **664** | **652** | 208 | 301 | 2600 | 3400 | 99.0 | 93.0 | 134.0 | 141.0 | 3.60 | 3.20 | 7.7 | 0.41 | 1.47 | 0.81 | 1.84 | 1.25 | **664** | **652** |
| | 171.450 | 49.213 | 46.038 | 31.750 | 3.60 | 3.20 | **9385** | **9321** | 250 | 299 | 1900 | 2700 | 111.0 | 98.0 | 147.0 | 164.0 | 3.60 | 3.20 | (5.9) | 0.76 | 0.79 | 0.43 | 3.2 | 1.49 | **9385** | **9321** |
| 84.975 | 125.413 | 25.400 | 25.400 | 19.845 | 5.00 | 1.60 | **27695** | **27620** | 101 | 162 | 2900 | 3800 | 100.0 | 91.0 | 115.0 | 120.0 | 5.00 | 1.60 | 0.7 | 0.42 | 1.44 | 0.79 | 0.644 | 0.344 | **27695** | **27620** |

Note: (1) Minus value of load center "a" indicates that the center is located outside of cone backface.

# ■ Tapered Roller Bearings

## Inch Series

Bore Diameter: 85.000～95,000mm

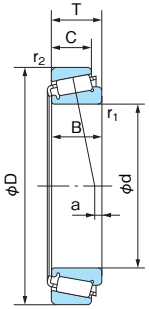


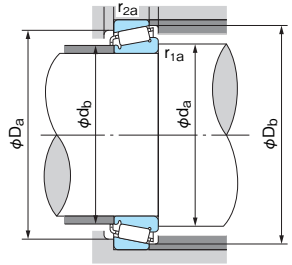


■**Dynamic equivalent radial load**

Pr=XFr+YFa

| $\frac{Fa}{Fr} \leqq e$ | | $\frac{Fa}{Fr} > e$ | |
|---|---|---|---|
| X | Y | X | Y |
| 1 | 0 | 0.4 | $Y_1$ |

Values e and $Y_1$ from table.

■**Static equivalent radial load**

Larger value of following to be used:

Por=0.5Fr+$Y_0$Fa

Por=Fr

Values $Y_0$ from table.

1N=0.102kgf

| Boundary dimensions (mm) | | | | | | | Bearing No. | | Basic load rating | | Limiting speed ($min^{-1}$) | | Abutment and fillet dimensions (mm) | | | | | | Load center (mm) | Constant | Axial load factor | | Mass(kg) Reference | | Bearing No. | |
|---|---|---|---|---|---|---|---|---|---|---|---|---|---|---|---|---|---|---|---|---|---|---|---|---|---|---|
| d | D | T | B | C | $r_1$ (min) | $r_2$ (min) | Cone | Cup | Cr (kN) | Cor (kN) | Grease | Oil | da | db | Da | Db | $r_{1a}$ | $r_{2a}$ | a (1) | e | $Y_1$ | $Y_0$ | Cone | Cup | Cone | Cup |
| 85.000 | 130.000 | 30.000 | 29.000 | 24.000 | 6.00 | 2.50 | JM716648 | JM716610 | 142 | 228 | 2800 | 3700 | 104.0 | 92.0 | 117.0 | 125.0 | 6.00 | 2.50 | 0.9 | 0.44 | 1.35 | 0.74 | 0.933 | 0.456 | JM716648 | JM716610 |
| | 130.000 | 30.000 | 29.000 | 24.000 | 3.00 | 2.50 | JM716649 | JM716610 | 142 | 228 | 2800 | 3700 | 98.0 | 92.0 | 117.0 | 125.0 | 3.00 | 2.50 | 0.9 | 0.44 | 1.35 | 0.74 | 0.937 | 0.456 | JM716649 | JM716610 |
| | 140.000 | 39.000 | 38.000 | 31.500 | 3.00 | 2.50 | JHM516849 | JHM516810 | 203 | 308 | 2700 | 3500 | 100.0 | 93.9 | 125.0 | 134.0 | 3.00 | 2.50 | 6.2 | 0.41 | 1.47 | 0.81 | 1.54 | 0.759 | JHM516849 | JHM516810 |
| 85.001 | 188.913 | 53.297 | 52.761 | 31.750 | 3.60 | 3.20 | 90334 | 90744 | 264 | 336 | 1700 | 2400 | 116.0 | 112.0 | 161.0 | 179.0 | 3.60 | 3.20 | (10.0) | 0.87 | 0.69 | 0.38 | 4.63 | 1.87 | 90334 | 90744 |
| 85.725 | 133.350 | 30.163 | 29.769 | 22.225 | 3.60 | 3.20 | 497 | 492A | 133 | 198 | 2700 | 3600 | 99.0 | 93.0 | 120.0 | 128.0 | 3.60 | 3.20 | 0.3 | 0.44 | 1.35 | 0.74 | 0.978 | 0.429 | 497 | 492A |
| | 136.525 | 30.163 | 29.769 | 22.225 | 3.60 | 3.20 | 497 | 493 | 133 | 198 | 2700 | 3600 | 99.0 | 93.0 | 122.0 | 130.0 | 3.60 | 3.20 | 0.3 | 0.44 | 1.35 | 0.74 | 0.978 | 0.544 | 497 | 493 |
| | 142.138 | 42.863 | 42.863 | 34.133 | 4.80 | 3.20 | HM617049 | HM617010 | 219 | 351 | 2600 | 3500 | 106.0 | 95.7 | 125.0 | 137.0 | 4.80 | 3.20 | 7.7 | 0.43 | 1.39 | 0.76 | 1.72 | 0.902 | HM617049 | HM617010 |
| | 146.050 | 41.275 | 41.275 | 31.750 | 3.60 | 3.30 | 665 | 653 | 208 | 301 | 2600 | 3400 | 102.0 | 95.0 | 131.0 | 139.0 | 3.60 | 3.30 | 7.7 | 0.41 | 1.47 | 0.81 | 1.77 | 0.880 | 665 | 653 |
| | 146.050 | 41.275 | 41.275 | 31.750 | 6.40 | 3.30 | 665A | 653 | 208 | 301 | 2600 | 3400 | 107.0 | 95.0 | 131.0 | 139.0 | 6.40 | 3.30 | 7.7 | 0.41 | 1.47 | 0.81 | 1.76 | 0.880 | 665A | 653 |
| | 152.400 | 39.688 | 36.322 | 30.163 | 3.60 | 3.20 | 596 | 592A | 183 | 287 | 2400 | 3300 | 102.0 | 96.0 | 135.0 | 144.0 | 3.60 | 3.20 | 2.6 | 0.44 | 1.36 | 0.75 | 1.83 | 1.04 | 596 | 592A |
| | 161.925 | 47.625 | 48.260 | 38.100 | 3.60 | 3.20 | 758 | 752 | 273 | 391 | 2400 | 3200 | 103.0 | 97.0 | 144.0 | 150.0 | 3.60 | 3.20 | 12.1 | 0.34 | 1.76 | 0.97 | 2.67 | 1.59 | 758 | 752 |
| 88.900 | 152.400 | 39.688 | 36.322 | 33.338 | 3.60 | 3.20 | 593 | 592 | 183 | 287 | 2400 | 3300 | 104.0 | 98.0 | 135.0 | 145.0 | 3.60 | 3.20 | 2.6 | 0.44 | 1.36 | 0.75 | 1.71 | 1.1 | 593 | 592 |
| | 152.400 | 39.688 | 36.322 | 30.163 | 6.40 | 3.20 | 593A | 592A | 183 | 287 | 2400 | 3300 | 110.0 | 98.0 | 135.0 | 144.0 | 6.40 | 3.20 | 2.6 | 0.44 | 1.36 | 0.75 | 1.7 | 1.04 | 593A | 592A |
| | 152.400 | 39.688 | 36.322 | 30.163 | 3.60 | 3.20 | 593 | 592A | 183 | 287 | 2400 | 3300 | 104.0 | 98.0 | 135.0 | 144.0 | 3.60 | 3.20 | 2.6 | 0.44 | 1.36 | 0.75 | 1.71 | 1.04 | 593 | 592A |
| | 152.400 | 39.688 | 39.688 | 30.163 | 6.40 | 3.20 | HM518445 | HM518410 | 248 | 359 | 2400 | 3200 | 110.0 | 98.0 | 135.0 | 114.0 | 6.40 | 3.20 | 6.6 | 0.40 | 1.49 | 0.82 | 2.10 | 0.768 | HM518445 | HM518410 |
| | 161.925 | 47.625 | 48.260 | 38.100 | 3.60 | 3.20 | 759 | 752 | 273 | 391 | 2400 | 3200 | 106.0 | 99.0 | 144.0 | 150.0 | 3.60 | 3.20 | 12.1 | 0.34 | 1.76 | 0.97 | 2.50 | 1.59 | 759 | 752 |
| | 161.925 | 53.975 | 55.100 | 42.863 | 3.60 | 3.20 | 6580R | 6535 | 316 | 471 | 2400 | 3200 | 109.0 | 98.0 | 141.0 | 154.0 | 3.60 | 3.20 | 12.5 | 0.40 | 1.50 | 0.82 | 3.09 | 1.65 | 6580R | 6535 |
| | 168.275 | 53.975 | 56.363 | 41.275 | 3.60 | 3.20 | 850R | 832 | 344 | 467 | 2300 | 3100 | 106.0 | 100.0 | 149.0 | 155.0 | 3.60 | 3.20 | 19.0 | 0.30 | 2.00 | 1.10 | 3.29 | 1.72 | 850R | 832 |
| 89.974 | 146.975 | 40.000 | 40.000 | 32.499 | 7.10 | 3.60 | HM218248 | HM218210 | 206 | 310 | 2500 | 3300 | 112.0 | 99.0 | 133.0 | 141.0 | 7.10 | 3.60 | 9.2 | 0.33 | 1.80 | 0.99 | 1.66 | 0.784 | HM218248 | HM218210 |
| 90.000 | 145.000 | 35.000 | 34.000 | 27.000 | 3.00 | 2.50 | JM718149UR | JM718110UR | 194 | 291 | 2500 | 3400 | 105.0 | 99.0 | 131.0 | 139.0 | 3.00 | 2.50 | 2.3 | 0.44 | 1.35 | 0.74 | 1.47 | 0.652 | JM718149UR | JM718110UR |
| | 145.000 | 35.000 | 34.000 | 27.000 | 6.00 | 2.50 | JM718149AUR | JM718110UR | 194 | 291 | 2500 | 3400 | 111.0 | 99.0 | 131.0 | 139.0 | 6.00 | 2.50 | 2.3 | 0.44 | 1.35 | 0.74 | 1.46 | 0.652 | JM718149AUR | JM718110UR |
| | 155.000 | 44.000 | 44.000 | 35.500 | 3.00 | 2.50 | JHM318448UR | JHM318410UR | 290 | 407 | 2400 | 3200 | 106.0 | 100.0 | 140.0 | 148.0 | 3.00 | 2.50 | 10.4 | 0.34 | 1.76 | 0.97 | 2.37 | 1.00 | JHM318448UR | JHM318410UR |
| | 161.925 | 53.975 | 55.100 | 42.863 | 3.00 | 3.20 | 6581XR | 6535 | 316 | 471 | 2400 | 3200 | 102.0 | 98.0 | 141.0 | 154.0 | 3.00 | 3.20 | 12.9 | 0.40 | 1.50 | 0.82 | 3.02 | 1.65 | 6581XR | 6535 |
| 90.488 | 161.925 | 47.625 | 48.260 | 38.100 | 3.60 | 3.20 | 760 | 752 | 273 | 391 | 2400 | 3200 | 107.0 | 101.0 | 144.0 | 150.0 | 3.60 | 3.20 | 12.1 | 0.34 | 1.76 | 0.97 | 2.42 | 1.59 | 760 | 752 |
| 92.075 | 146.050 | 33.338 | 34.925 | 26.195 | 3.60 | 3.20 | 47890R | 47820 | 178 | 293 | 2500 | 3300 | 107.0 | 101.0 | 131.0 | 140.0 | 3.60 | 3.20 | 1.2 | 0.45 | 1.34 | 0.74 | 1.46 | 0.657 | 47890R | 47820 |
| | 150.000 | 35.992 | 36.322 | 27.000 | 3.60 | 3.00 | 598 | 593X | 183 | 287 | 2400 | 3300 | 107.0 | 101.0 | 134.0 | 142.0 | 3.60 | 3.00 | 2.6 | 0.44 | 1.36 | 0.75 | 1.58 | 0.763 | 598 | 593X |
| | 150.000 | 35.992 | 36.322 | 27.000 | 6.40 | 3.00 | 598A | 593X | 183 | 287 | 2400 | 3300 | 113.0 | 101.0 | 134.0 | 142.0 | 6.40 | 3.00 | 2.6 | 0.44 | 1.36 | 0.75 | 1.57 | 0.763 | 598A | 593X |
| | 152.400 | 39.688 | 36.322 | 33.338 | 3.60 | 3.20 | 598 | 592 | 183 | 287 | 2400 | 3300 | 107.0 | 101.0 | 135.0 | 145.0 | 3.60 | 3.20 | 2.6 | 0.44 | 1.36 | 0.75 | 1.58 | 1.1 | 598 | 592 |
| | 152.400 | 39.688 | 36.322 | 30.163 | 3.60 | 3.20 | 598 | 592A | 183 | 287 | 2400 | 3300 | 107.0 | 101.0 | 135.0 | 144.0 | 3.60 | 3.20 | 2.6 | 0.44 | 1.36 | 0.75 | 1.58 | 1.04 | 598 | 592A |
| | 152.400 | 39.688 | 36.322 | 30.163 | 6.40 | 3.20 | 598A | 592A | 183 | 287 | 2400 | 3300 | 113.0 | 101.0 | 135.0 | 144.0 | 6.40 | 3.20 | 2.6 | 0.44 | 1.36 | 0.75 | 1.57 | 1.04 | 598A | 592A |
| | 152.400 | 39.688 | 36.322 | 30.163 | 6.40 | 3.20 | 598AUR | 592AUR | 183 | 287 | 2400 | 3300 | 113.0 | 101.0 | 135.0 | 144.0 | 6.40 | 3.20 | 2.6 | 0.44 | 1.36 | 0.75 | 1.57 | 1.04 | 598AUR | 592AUR |
| | 168.275 | 41.275 | 41.275 | 30.163 | 3.60 | 3.30 | 681 | 672 | 224 | 349 | 2200 | 3000 | 110.0 | 104.0 | 149.0 | 160.0 | 3.60 | 3.30 | 2.6 | 0.47 | 1.28 | 0.70 | 2.61 | 1.22 | 681 | 672 |
| 93.663 | 148.430 | 28.575 | 28.971 | 21.433 | 3.00 | 3.00 | 42368 | 42584 | 143 | 225 | 2400 | 3200 | 107.0 | 102.0 | 134.0 | 142.0 | 3.00 | 3.00 | (3.3) | 0.49 | 1.22 | 0.67 | 1.21 | 0.546 | 42368 | 42584 |
| 95.000 | 150.000 | 35.000 | 34.000 | 27.000 | 3.00 | 2.50 | JM719149 | JM719113 | 187 | 294 | 2400 | 3300 | 109.0 | 104.0 | 135.0 | 143.0 | 3.00 | 2.50 | 1.5 | 0.44 | 1.36 | 0.75 | 1.43 | 0.766 | JM719149 | JM719113 |

Note: (1) Minus value of load center "a" indicates that the center is located outside of cone backface.

# Tapered Roller Bearings

## Inch Series

Bore Diameter: 95.250～120.650mm

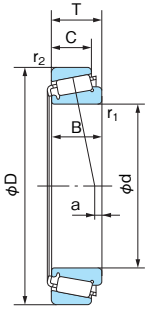


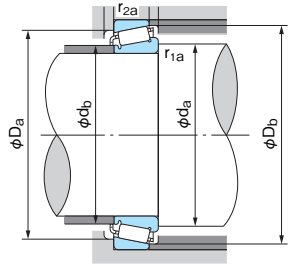


**■Dynamic equivalent radial load**

Pr=XFr+YFa

| $\frac{Fa}{Fr} \leqq e$ | | $\frac{Fa}{Fr} > e$ | |
|---|---|---|---|
| X | Y | X | Y |
| 1 | 0 | 0.4 | $Y_1$ |

Values e and $Y_1$ from table.

**■Static equivalent radial load**

Larger value of following to be used:

Por=0.5Fr+$Y_0$Fa

Por=Fr

Values $Y_0$ from table.

1N=0.102kgf

| Boundary dimensions (mm) | | | | | | | Bearing No. | | Basic load rating | | Limiting speed ($min^{-1}$) | | Abutment and fillet dimensions (mm) | | | | | | Load center (mm) | Constant | Axial load factor | | Mass(kg) Reference | | Bearing No. | |
|---|---|---|---|---|---|---|---|---|---|---|---|---|---|---|---|---|---|---|---|---|---|---|---|---|---|---|
| d | D | T | B | C | $r_1$ (min) | $r_2$ (min) | Cone | Cup | Cr (kN) | Cor (kN) | Grease | Oil | da | db | Da | Db | $r_{1a}$ | $r_{2a}$ | a (1) | e | $Y_1$ | $Y_0$ | Cone | Cup | Cone | Cup |
| 95.250 | 146.050 | 33.338 | 34.925 | 26.195 | 3.60 | 3.20 | 47896R | 47820 | 178 | 293 | 2500 | 3300 | 110.0 | 103.0 | 131.0 | 140.0 | 3.60 | 3.20 | 1.2 | 0.45 | 1.34 | 0.74 | 1.34 | 0.657 | 47896R | 47820 |
| | 149.225 | 31.750 | 28.971 | 24.608 | 3.60 | 3.20 | 42376 | 42587 | 143 | 225 | 2400 | 3200 | 109.0 | 103.0 | 98.0 | 104.0 | 3.60 | 3.20 | (3.3) | 0.49 | 1.22 | 0.67 | 1.15 | 0.702 | 42376 | 42587 |
| | 150.000 | 35.992 | 36.322 | 27.000 | 3.60 | 3.00 | 594 | 593X | 183 | 287 | 2400 | 3300 | 110.0 | 104.0 | 134.0 | 142.0 | 3.60 | 3.00 | 2.6 | 0.44 | 1.36 | 0.75 | 1.45 | 0.763 | 594 | 593X |
| | 152.400 | 39.688 | 36.322 | 33.338 | 3.60 | 3.20 | 594 | 592 | 183 | 287 | 2400 | 3300 | 110.0 | 104.0 | 135.0 | 145.0 | 3.60 | 3.20 | 2.6 | 0.44 | 1.36 | 0.75 | 1.45 | 1.1 | 594 | 592 |
| | 152.400 | 39.688 | 36.322 | 30.163 | 3.60 | 3.20 | 594A | 592A | 183 | 287 | 2400 | 3300 | 110.0 | 104.0 | 135.0 | 144.0 | 3.60 | 3.20 | 2.6 | 0.44 | 1.36 | 0.75 | 1.45 | 1.04 | 594A | 592A |
| | 152.400 | 39.688 | 36.322 | 30.163 | 3.60 | 3.20 | 594 | 592A | 183 | 287 | 2400 | 3300 | 110.0 | 104.0 | 135.0 | 144.0 | 3.60 | 3.20 | 2.6 | 0.44 | 1.36 | 0.75 | 1.45 | 1.04 | 594 | 592A |
| | 168.275 | 41.275 | 41.275 | 30.163 | 3.60 | 3.30 | 683 | 672 | 224 | 349 | 2200 | 3000 | 113.0 | 106.0 | 149.0 | 160.0 | 3.60 | 3.30 | 2.6 | 0.47 | 1.28 | 0.70 | 2.46 | 1.22 | 683 | 672 |
| 96.838 | 148.430 | 28.575 | 28.971 | 21.433 | 3.60 | 3.00 | 42381 | 42584 | 143 | 225 | 2400 | 3200 | 110.0 | 104.0 | 134.0 | 142.0 | 3.60 | 3.00 | (3.3) | 0.49 | 1.22 | 0.67 | 1.1 | 0.546 | 42381 | 42584 |
| 99.975 | 156.975 | 42.000 | 42.000 | 34.000 | 7.90 | 3.60 | HM220149 | HM220110 | 245 | 396 | 2300 | 3100 | 122.9 | 109.0 | 142.0 | 151.0 | 7.90 | 3.60 | 9.6 | 0.33 | 1.80 | 0.99 | 2.04 | 0.862 | HM220149 | HM220110 |
| 100.000 | 155.000 | 36.000 | 35.000 | 28.000 | 3.00 | 2.50 | JM720249E | JM720210E | 204 | 328 | 2300 | 3100 | 115.0 | 109.0 | 140.0 | 149.0 | 3.00 | 2.50 | 0.3 | 0.47 | 1.27 | 0.70 | 1.64 | 0.763 | JM720249E | JM720210E |
| | 160.000 | 41.000 | 40.000 | 32.000 | 3.00 | 2.50 | JHM720249 | JHM720210 | 237 | 378 | 2300 | 3000 | 117.0 | 109.0 | 143.0 | 154.0 | 3.00 | 2.50 | 2.7 | 0.47 | 1.28 | 0.70 | 2.11 | 0.964 | JHM720249 | JHM720210 |
| | 200.000 | 52.761 | 49.213 | 34.925 | 3.60 | 3.20 | 98394X | 98788 | 347 | 471 | 1400 | 1900 | 130.0 | 122.0 | 174.0 | 188.0 | 3.60 | 3.20 | (1.9) | 0.63 | 0.95 | 0.52 | 4.65 | 2.28 | 98394X | 98788 |
| 100.013 | 157.163 | 36.513 | 36.116 | 26.195 | 3.60 | 3.20 | 52393 | 52618 | 180 | 288 | 2300 | 3000 | 116.0 | 109.0 | 142.0 | 152.0 | 3.60 | 3.20 | 0.5 | 0.47 | 1.26 | 0.69 | 1.74 | 0.694 | 52393 | 52618 |
| 101.600 | 157.163 | 36.513 | 36.116 | 26.195 | 3.60 | 3.20 | 52400 | 52618 | 180 | 288 | 2300 | 3000 | 117.0 | 111.0 | 142.0 | 152.0 | 3.60 | 3.20 | 0.5 | 0.47 | 1.26 | 0.69 | 1.67 | 0.694 | 52400 | 52618 |
| | 180.975 | 47.625 | 48.006 | 38.100 | 3.60 | 3.20 | 780 | 772 | 288 | 438 | 2100 | 2800 | 119.0 | 113.0 | 161.0 | 168.0 | 3.60 | 3.20 | 8.2 | 0.39 | 1.56 | 0.86 | 3.09 | 1.92 | 780 | 772 |
| | 190.500 | 57.150 | 57.531 | 46.038 | 7.90 | 3.20 | HH221449 | HH221410 | 440 | 602 | 2000 | 2700 | 131.0 | 115.0 | 171.0 | 179.0 | 7.90 | 3.20 | 14.7 | 0.33 | 1.79 | 0.99 | 4.72 | 2.21 | HH221449 | HH221410 |
| | 212.725 | 66.675 | 66.675 | 53.975 | 7.10 | 3.20 | HH224335 | HH224310 | 513 | 699 | 1800 | 2400 | 132.0 | 121.0 | 192.0 | 202.0 | 7.10 | 3.20 | 19.9 | 0.33 | 1.84 | 1.01 | 7.76 | 3.03 | HH224335 | HH224310 |
| 104.775 | 180.975 | 47.625 | 48.006 | 38.100 | 3.60 | 3.20 | 782 | 772 | 288 | 438 | 2100 | 2800 | 122.0 | 116.0 | 161.0 | 168.0 | 3.60 | 3.20 | 8.2 | 0.39 | 1.56 | 0.86 | 2.90 | 1.92 | 782 | 772 |
| | 180.975 | 47.625 | 48.006 | 38.100 | 6.40 | 3.20 | 786 | 772 | 288 | 438 | 2100 | 2800 | 128.0 | 116.0 | 161.0 | 168.0 | 6.40 | 3.20 | 8.2 | 0.39 | 1.56 | 0.86 | 2.88 | 1.92 | 786 | 772 |
| | 190.500 | 47.625 | 49.213 | 34.925 | 3.60 | 3.20 | 71412 | 71750 | 303 | 483 | 1900 | 2600 | 124.0 | 118.0 | 171.0 | 181.0 | 3.60 | 3.20 | 6.7 | 0.42 | 1.44 | 0.79 | 3.96 | 1.72 | 71412 | 71750 |
| 107.950 | 158.750 | 23.020 | 21.438 | 15.875 | 3.60 | 3.20 | 37425 | 37625 | 104 | 169 | 2200 | 3000 | 122.0 | 115.0 | 143.0 | 152.0 | 3.60 | 3.20 | (13.5) | 0.61 | 0.99 | 0.54 | 0.893 | 0.484 | 37425 | 37625 |
| | 165.100 | 36.513 | 36.513 | 26.988 | 3.60 | 3.20 | 56425R | 56650 | 195 | 325 | 2200 | 2900 | 123.0 | 117.0 | 149.0 | 159.0 | 3.60 | 3.20 | (2.0) | 0.50 | 1.21 | 0.66 | 1.76 | 0.852 | 56425R | 56650 |
| | 168.275 | 36.513 | 36.513 | 26.988 | 3.60 | 3.20 | 56425R | 56662 | 195 | 325 | 2200 | 2900 | 123.0 | 117.0 | 150.0 | 160.0 | 3.60 | 3.20 | (2.0) | 0.50 | 1.21 | 0.66 | 1.76 | 1.03 | 56425R | 56662 |
| 110.000 | 165.000 | 35.000 | 35.000 | 26.500 | 3.00 | 2.50 | JM822049 | JM822010 | 195 | 325 | 2200 | 2900 | 124.0 | 119.0 | 149.0 | 159.0 | 3.00 | 2.50 | (3.1) | 0.50 | 1.21 | 0.66 | 1.64 | 0.826 | JM822049 | JM822010 |
| | 180.000 | 47.000 | 46.000 | 38.000 | 3.00 | 2.50 | JHM522649 | JHM522610 | 306 | 487 | 2000 | 2700 | 127.0 | 122.0 | 162.0 | 172.0 | 3.00 | 2.50 | 6.4 | 0.41 | 1.48 | 0.81 | 3.08 | 1.49 | JHM522649 | JHM522610 |
| 114.300 | 190.500 | 47.625 | 49.213 | 34.925 | 3.60 | 3.20 | 71450 | 71750 | 303 | 483 | 1900 | 2600 | 132.0 | 125.0 | 171.0 | 181.0 | 3.60 | 3.20 | 6.7 | 0.42 | 1.44 | 0.79 | 3.33 | 1.72 | 71450 | 71750 |
| | 212.725 | 66.675 | 66.675 | 53.975 | 7.10 | 3.20 | HH224346 | HH224310 | 513 | 699 | 1800 | 2400 | 143.0 | 131.0 | 192.0 | 202.0 | 7.10 | 3.20 | 19.9 | 0.33 | 1.84 | 1.01 | 6.64 | 3.03 | HH224346 | HH224310 |
| | 212.725 | 66.675 | 66.675 | 53.975 | 7.10 | 3.20 | 938 | 932 | 450 | 674 | 1800 | 2400 | 141.0 | 128.0 | 187.0 | 193.0 | 7.10 | 3.20 | 19.1 | 0.33 | 1.84 | 1.01 | 5.96 | 4.07 | 938 | 932 |
| | 228.600 | 53.975 | 49.428 | 38.100 | 3.60 | 3.20 | HM926740 | HM926710 | 430 | 651 | 1300 | 1900 | 146.0 | 142.0 | 200.0 | 219.0 | 3.60 | 3.20 | (14.1) | 0.74 | 0.81 | 0.45 | 7.25 | 2.78 | HM926740 | HM926710 |
| 114.975 | 212.725 | 66.675 | 66.675 | 53.975 | 7.10 | 3.20 | HH224349 | HH224310 | 513 | 699 | 1800 | 2400 | 143.0 | 131.0 | 192.0 | 202.0 | 7.10 | 3.20 | 19.9 | 0.33 | 1.84 | 1.01 | 6.58 | 3.03 | HH224349 | HH224310 |
| 115.087 | 190.500 | 47.625 | 49.213 | 34.925 | 7.90 | 3.20 | 71455 | 71750 | 303 | 483 | 1900 | 2600 | 141.0 | 126.0 | 171.0 | 181.0 | 7.90 | 3.20 | 6.7 | 0.42 | 1.44 | 0.79 | 3.25 | 1.72 | 71455 | 71750 |
| 117.475 | 180.975 | 34.925 | 31.750 | 25.400 | 3.60 | 3.20 | 68462 | 68712 | 171 | 247 | 2000 | 2700 | 132.0 | 125.0 | 163.0 | 172.0 | 3.60 | 3.20 | (5.8) | 0.50 | 1.21 | 0.66 | 1.75 | 1.04 | 68462 | 68712 |
| 120.650 | 206.375 | 47.625 | 47.625 | 34.925 | 3.20 | 3.20 | 795 | 792 | 326 | 548 | 1700 | 2300 | 139.0 | 134.0 | 186.0 | 198.0 | 3.20 | 3.20 | 1.9 | 0.46 | 1.31 | 0.72 | 4.53 | 1.88 | 795 | 792 |
| | 234.950 | 63.500 | 63.500 | 49.213 | 6.40 | 3.20 | 95475 | 95925 | 523 | 826 | 1600 | 2100 | 149.0 | 137.0 | 209.0 | 217.0 | 6.40 | 3.20 | 13.6 | 0.37 | 1.62 | 0.89 | 8.34 | 4 | 95475 | 95925 |

Note: (1) Minus value of load center "a" indicates that the center is located outside of cone backface.

# Tapered Roller Bearings

## Inch Series

Bore Diameter: 123.825～196.850mm

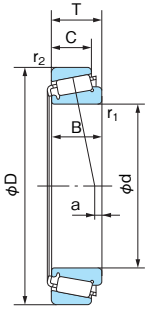


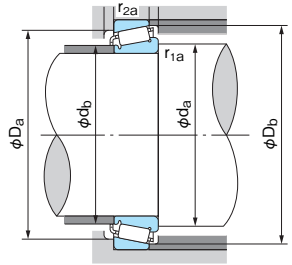


**■Dynamic equivalent radial load**

Pr=XFr+YFa

| $\frac{Fa}{Fr} \leqq e$ | | $\frac{Fa}{Fr} > e$ | |
|---|---|---|---|
| X | Y | X | Y |
| 1 | 0 | 0.4 | $Y_1$ |

Values e and $Y_1$ from table.

**■Static equivalent radial load**

Larger value of following to be used:

$P_{or}=0.5F_r+Y_0F_a$

$P_{or}=F_r$

Values $Y_0$ from table.

1N=0.102kgf

| Boundary dimensions (mm) | | | | | | | Bearing No. | | Basic load rating | | Limiting speed (min-1) | | Abutment and fillet dimensions (mm) | | | | | | Load center (mm) | Constant | Axial load factor | | Mass(kg) Reference | | Bearing No. | |
|---|---|---|---|---|---|---|---|---|---|---|---|---|---|---|---|---|---|---|---|---|---|---|---|---|---|---|
| d | D | T | B | C | $r_1$ (min) | $r_2$ (min) | Cone | Cup | Cr (kN) | Cor (kN) | Grease | Oil | da | db | Da | Db | $r_{1a}$ | $r_{2a}$ | a (1) | e | $Y_1$ | $Y_0$ | Cone | Cup | Cone | Cup |
| **123.825** | 182.563 | 39.688 | 38.100 | 33.338 | 3.60 | 3.20 | **48286** | **48220** | 227 | 429 | 1900 | 2500 | 139.0 | 133.0 | 168.0 | 176.0 | 3.60 | 3.20 | 5.6 | 0.31 | 1.97 | 1.08 | 2.3 | 1.13 | **48286** | **48220** |
| **125.298** | 228.600 | 53.975 | 49.428 | 38.100 | 3.60 | 3.20 | **HM926745** | **HM926710** | 430 | 651 | 1300 | 1900 | 154.0 | 143.0 | 200.0 | 219.0 | 3.60 | 3.20 | (14.1) | 0.74 | 0.81 | 0.45 | 6.46 | 2.78 | **HM926745** | **HM926710** |
| | 182.563 | 39.688 | 38.100 | 33.338 | 3.60 | 3.20 | **48290** | **48220** | 227 | 429 | 1700 | 2300 | 141.0 | 135.0 | 168.0 | 176.0 | 3.60 | 3.20 | 5.6 | 0.31 | 1.97 | 1.08 | 2.11 | 1.13 | **48290** | **48220** |
| | 196.850 | 46.038 | 46.038 | 38.100 | 3.60 | 3.20 | **67388** | **67322** | 311 | 561 | 1700 | 2300 | 144.0 | 138.0 | 180.0 | 189.0 | 3.60 | 3.20 | 6.3 | 0.34 | 1.74 | 0.96 | 3.63 | 1.45 | **67388** | **67322** |
| **127.000** | 215.900 | 47.625 | 47.625 | 34.925 | 3.60 | 3.20 | **74500** | **74850** | 322 | 549 | 1600 | 2200 | 148.0 | 141.0 | 196.0 | 208.0 | 3.60 | 3.20 | (2.1) | 0.49 | 1.23 | 0.68 | 4.92 | 1.93 | **74500** | **74850** |
| | 228.600 | 53.975 | 49.428 | 38.100 | 3.60 | 3.20 | **HM926747** | **HM926710** | 430 | 651 | 1300 | 1900 | 156.0 | 143.0 | 200.0 | 219.0 | 3.60 | 3.20 | (14.1) | 0.74 | 0.81 | 0.45 | 6.32 | 2.78 | **HM926747** | **HM926710** |
| | 254.000 | 77.788 | 82.550 | 61.913 | 9.50 | 6.40 | **HH228349** | **HH228310** | 717 | 1050 | 1500 | 2000 | 164.0 | 148.0 | 223.0 | 234.0 | 9.50 | 6.40 | 23.8 | 0.32 | 1.87 | 1.03 | 11.8 | 6.00 | **HH228349** | **HH228310** |
| **128.588** | 206.375 | 47.625 | 47.625 | 34.925 | 3.20 | 3.20 | **799** | **792** | 326 | 548 | 1700 | 2300 | 146.0 | 140.0 | 186.0 | 198.0 | 3.20 | 3.20 | 1.9 | 0.46 | 1.31 | 0.72 | 3.96 | 1.88 | **799** | **792** |
| **133.350** | 196.850 | 46.038 | 46.038 | 38.100 | 3.60 | 3.20 | **67390** | **67322** | 311 | 561 | 1700 | 2300 | 149.0 | 143.0 | 180.0 | 189.0 | 3.60 | 3.20 | 6.3 | 0.34 | 1.74 | 0.96 | 3.17 | 1.45 | **67390** | **67322** |
| | 215.900 | 47.625 | 47.625 | 34.925 | 3.60 | 3.20 | **74525** | **74850** | 322 | 549 | 1600 | 2200 | 152.0 | 146.0 | 196.0 | 208.0 | 3.60 | 3.20 | (2.1) | 0.49 | 1.23 | 0.68 | 4.44 | 1.93 | **74525** | **74850** |
| **136.525** | 190.500 | 39.688 | 39.688 | 33.338 | 3.60 | 3.20 | **48393** | **48320** | 236 | 472 | 1800 | 2400 | 151.0 | 144.0 | 177.0 | 184.0 | 3.60 | 3.20 | 3.8 | 0.32 | 1.87 | 1.03 | 2.25 | 1.15 | **48393** | **48320** |
| | 228.600 | 57.150 | 57.150 | 44.450 | 3.60 | 3.20 | **898** | **892** | 439 | 730 | 1600 | 2100 | 160.0 | 153.0 | 205.0 | 216.0 | 3.60 | 3.20 | 6.6 | 0.42 | 1.43 | 0.78 | 5.6 | 3.1 | **898** | **892** |
| **139.700** | 236.538 | 57.150 | 56.642 | 44.450 | 3.60 | 3.20 | **HM231132** | **HM231110** | 499 | 832 | 1500 | 2000 | 157.0 | 153.0 | 217.0 | 224.0 | 3.60 | 3.20 | 12.0 | 0.32 | 1.88 | 1.04 | 7.25 | 2.8 | **HM231132** | **HM231110** |
| | 254.000 | 66.675 | 66.675 | 47.625 | 7.10 | 3.20 | **99550** | **99100** | 549 | 913 | 1400 | 1900 | 170.0 | 156.0 | 227.0 | 238.0 | 7.10 | 3.20 | 11.7 | 0.41 | 1.47 | 0.81 | 10 | 4.19 | **99550** | **99100** |
| **142.875** | 193.675 | 28.575 | 28.575 | 23.020 | 1.60 | 1.60 | **36686** | **36620** | 187 | 375 | 1700 | 2300 | 153.0 | 151.0 | 182.0 | 188.0 | 1.60 | 1.60 | (5.1) | 0.37 | 1.63 | 0.90 | 1.71 | 0.715 | **36686** | **36620** |
| | 200.025 | 41.275 | 39.688 | 34.130 | 3.60 | 3.30 | **48685** | **48620** | 246 | 491 | 1700 | 2200 | 158.0 | 151.0 | 185.0 | 193.0 | 3.60 | 3.30 | 2.7 | 0.34 | 1.78 | 0.98 | 2.46 | 1.38 | **48685** | **48620** |
| **146.050** | 193.675 | 28.575 | 28.575 | 23.020 | 1.60 | 1.60 | **36690** | **36620** | 187 | 375 | 1700 | 2300 | 155.0 | 153.0 | 182.0 | 188.0 | 1.60 | 1.60 | (5.1) | 0.37 | 1.63 | 0.90 | 1.55 | 0.715 | **36690** | **36620** |
| | 236.538 | 57.150 | 56.642 | 44.450 | 3.60 | 3.20 | **HM231140** | **HM231110** | 499 | 832 | 1500 | 2000 | 164.0 | 160.0 | 217.0 | 224.0 | 3.60 | 3.20 | 12.0 | 0.32 | 1.88 | 1.04 | 6.65 | 2.8 | **HM231140** | **HM231110** |
| **149.225** | 236.538 | 57.150 | 56.642 | 44.450 | 6.40 | 3.20 | **HM231148** | **HM231110** | 499 | 832 | 1500 | 2000 | 172.0 | 163.0 | 217.0 | 224.0 | 6.40 | 3.20 | 12.0 | 0.32 | 1.88 | 1.04 | 6.3 | 2.8 | **HM231148** | **HM231110** |
| **158.750** | 225.425 | 41.275 | 39.688 | 33.338 | 3.60 | 3.20 | **46780R** | **46720** | 258 | 568 | 1400 | 1900 | 176.0 | 169.0 | 209.0 | 218.0 | 3.60 | 3.20 | (2.7) | 0.38 | 1.57 | 0.86 | 3.52 | 1.64 | **46780R** | **46720** |
| **165.100** | 247.650 | 47.625 | 47.625 | 38.100 | 3.60 | 3.20 | **67780** | **67720** | 346 | 701 | 1300 | 1800 | 185.0 | 179.0 | 229.0 | 240.0 | 3.60 | 3.20 | (4.7) | 0.44 | 1.36 | 0.75 | 5.66 | 2.3 | **67780** | **67720** |
| **168.275** | 247.650 | 47.625 | 47.625 | 38.100 | 3.60 | 3.20 | **67782** | **67720** | 346 | 701 | 1300 | 1800 | 187.0 | 181.0 | 229.0 | 240.0 | 3.60 | 3.20 | (4.7) | 0.44 | 1.36 | 0.75 | 5.35 | 2.3 | **67782** | **67720** |
| **170.000** | 230.000 | 39.000 | 38.000 | 31.000 | 3.00 | 2.50 | **JHM534149** | **JHM534110** | 291 | 558 | 1400 | 1900 | 184.0 | 178.0 | 217.0 | 224.0 | 3.00 | 2.50 | (4.6) | 0.38 | 1.57 | 0.86 | 3.17 | 1.29 | **JHM534149** | **JHM534110** |
| | 240.000 | 46.000 | 44.500 | 37.000 | 3.00 | 2.50 | **JM734449** | **JM734410** | 353 | 666 | 1400 | 1800 | 185.0 | 180.0 | 222.0 | 232.0 | 3.00 | 2.50 | (4.1) | 0.44 | 1.37 | 0.75 | 4.31 | 2.00 | **JM734449** | **JM734410** |
| **177.800** | 247.650 | 47.625 | 47.625 | 38.100 | 3.60 | 3.20 | **67790** | **67720** | 346 | 701 | 1300 | 1800 | 194.0 | 188.0 | 229.0 | 240.0 | 3.60 | 3.20 | (4.7) | 0.44 | 1.36 | 0.75 | 4.39 | 2.3 | **67790** | **67720** |
| **180.000** | 250.000 | 47.000 | 45.000 | 37.000 | 3.00 | 2.50 | **JM736149** | **JM736110** | 365 | 705 | 1300 | 1700 | 196.0 | 191.0 | 232.0 | 243.0 | 3.00 | 2.50 | (8.4) | 0.48 | 1.25 | 0.69 | 4.47 | 2.1 | **JM736149** | **JM736110** |
| **184.150** | 266.700 | 47.625 | 46.833 | 38.100 | 3.60 | 3.20 | **67883** | **67820** | 339 | 703 | 1200 | 1600 | 204.0 | 198.0 | 246.0 | 259.0 | 3.60 | 3.20 | (10.2) | 0.48 | 1.26 | 0.69 | 6.06 | 2.53 | **67883** | **67820** |
| **187.325** | 266.700 | 47.625 | 46.833 | 38.100 | 3.60 | 3.20 | **67884** | **67820** | 339 | 703 | 1200 | 1600 | 206.0 | 201.0 | 246.0 | 259.0 | 3.60 | 3.20 | (10.2) | 0.48 | 1.26 | 0.69 | 5.76 | 2.53 | **67884** | **67820** |
| **190.000** | 260.000 | 46.000 | 44.000 | 36.500 | 3.00 | 2.50 | **JM738249** | **JM738210** | 369 | 723 | 1200 | 1700 | 206.0 | 200.0 | 242.0 | 252.0 | 3.00 | 2.50 | (10.1) | 0.48 | 1.26 | 0.69 | 4.71 | 2.18 | **JM738249** | **JM738210** |
| **196.850** | 254.000 | 28.575 | 27.783 | 21.433 | 1.60 | 1.60 | **L540049** | **L540010** | 188 | 387 | 1200 | 1600 | 207.0 | 205.0 | 243.0 | 247.0 | 1.60 | 1.60 | (14.6) | 0.40 | 1.51 | 0.83 | 2.34 | 1.02 | **L540049** | **L540010** |

Note: (1) Minus value of load center "a" indicates that the center is located outside of cone backface.

# Double-row Tapered Roller Bearings - Outward

Bore Diameter: 25～75mm

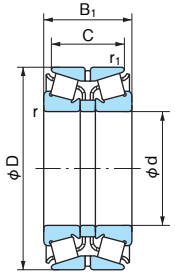


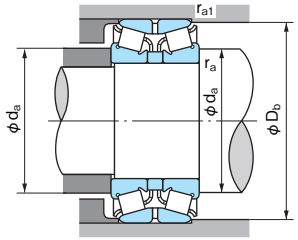


**Dynamic equivalent radial load**

Pr=XFr+YFa

| $\frac{Fa}{Fr} \leqq e$ | | $\frac{Fa}{Fr} > e$ | |
|---|---|---|---|
| X | Y | X | Y |
| 1 | $Y_1$ | 0.67 | $Y_2$ |

Values e, $Y_1$ and $Y_2$ from table.

**Static equivalent radial load**

$P_{or}=F_r+Y_0F_a$

Values $Y_0$ from table.

1N=0.102kgf

| Boundary dimensions (mm) | | | | | | Bearing No. | Basic dynamic load rating Cr (N) | Basic static load rating Cor (N) | Abutment and fillet dimensions (mm) | | | | Constant e | Axial load factor | | | Mass (kg) | Bearing No. |
|---|---|---|---|---|---|---|---|---|---|---|---|---|---|---|---|---|---|---|
| d | D | $B_1$ | C | r (min) | $r_1$ (min) | | | | da (min) | Db (min) | ra (max) | $r_{a1}$ (max) | | $Y_1$ | $Y_2$ | $Y_0$ | | |
| 25 | 62 | 40 | 29.5 | 1.5 | 0.6 | H-25KDE13 | 68300 | 84900 | 33.5 | 58.5 | 1.5 | 0.6 | 0.83 | 0.82 | 1.22 | 0.80 | 0.592 | H-25KDE13 |
| 30 | 72 | 45 | 31.5 | 1.5 | 0.6 | H-30KDE13 | 87300 | 110000 | 38.5 | 68 | 1.5 | 0.6 | 0.83 | 0.82 | 1.22 | 0.80 | 0.872 | H-30KDE13 |
| 35 | 80 | 51 | 35.5 | 2 | 0.6 | H-35KDE13 | 108000 | 138000 | 45 | 76.5 | 2 | 0.6 | 0.83 | 0.82 | 1.22 | 0.80 | 1.2 | H-35KDE13 |
| 40 | 80 | 45 | 37.5 | 1.5 | 0.6 | H-40KBE02 | 108000 | 138000 | 48.5 | 75 | 1.5 | 0.6 | 0.37 | 1.80 | 2.68 | 1.76 | 0.954 | H-40KBE02 |
| | 80 | 55 | 43.5 | 1.5 | 0.6 | H-40KBE22 | 133000 | 182000 | 48.5 | 75 | 1.5 | 0.6 | 0.37 | 1.80 | 2.68 | 1.76 | 1.19 | H-40KBE22 |
| | 90 | 56 | 45.5 | 2 | 0.6 | H-40KBE03 | 155000 | 202000 | 50 | 82 | 2 | 0.6 | 0.35 | 1.96 | 2.91 | 1.91 | 1.67 | H-40KBE03 |
| | 90 | 56 | 39.5 | 2 | 0.6 | H-40KDE13 | 138000 | 180000 | 50 | 86.5 | 2 | 0.6 | 0.83 | 0.82 | 1.22 | 0.80 | 1.67 | H-40KDE13 |
| 45 | 85 | 47 | 37.5 | 1.5 | 0.6 | H-45KBE02 | 115000 | 155000 | 53.5 | 80 | 1.5 | 0.6 | 0.40 | 1.67 | 2.48 | 1.63 | 1.1 | H-45KBE02 |
| | 85 | 55 | 43.5 | 1.5 | 0.6 | H-45KBE22 | 134000 | 188000 | 53.5 | 81 | 1.5 | 0.6 | 0.40 | 1.67 | 2.48 | 1.63 | 1.31 | H-45KBE22 |
| | 100 | 60 | 49.5 | 2 | 0.6 | 45KBE03 | 193000 | 256000 | 55 | 93 | 2 | 0.6 | 0.35 | 1.96 | 2.91 | 1.91 | 2.2 | 45KBE03 |
| | 100 | 60 | 41.5 | 2 | 0.6 | 45KDE13 | 163000 | 214000 | 55 | 96 | 2 | 0.6 | 0.83 | 0.82 | 1.22 | 0.80 | 2.15 | 45KDE13 |
| 50 | 90 | 49 | 39.5 | 1.5 | 0.6 | 50KBE02 | 131000 | 183000 | 58.5 | 85 | 1.5 | 0.6 | 0.42 | 1.61 | 2.39 | 1.57 | 1.22 | 50KBE02 |
| | 90 | 55 | 43.5 | 1.5 | 0.6 | 50KBE22 | 146000 | 211000 | 58.5 | 85 | 1.5 | 0.6 | 0.42 | 1.61 | 2.39 | 1.57 | 1.39 | 50KBE22 |
| | 110 | 64 | 51.5 | 2 | 0.6 | 50KBE03 | 236000 | 305000 | 62 | 102 | 2 | 0.6 | 0.35 | 1.96 | 2.91 | 1.91 | 2.68 | 50KBE03 |
| | 110 | 64 | 43.5 | 2 | 0.6 | 50KDE13 | 198000 | 266000 | 62 | 105 | 2 | 0.6 | 0.83 | 0.82 | 1.22 | 0.80 | 3.11 | 50KDE13 |
| 55 | 100 | 51 | 41.5 | 2 | 0.6 | 55KBE02 | 162000 | 226000 | 65 | 94 | 2 | 0.6 | 0.40 | 1.67 | 2.48 | 1.63 | 1.6 | 55KBE02 |
| | 100 | 60 | 48.5 | 2 | 0.6 | 55KBE22 | 184000 | 266000 | 65 | 95 | 2 | 0.6 | 0.40 | 1.67 | 2.48 | 1.63 | 1.87 | 55KBE22 |
| | 120 | 70 | 57 | 2 | 0.6 | 55KBE03 | 256000 | 341000 | 67 | 111 | 2 | 0.6 | 0.35 | 1.96 | 2.91 | 1.91 | 3.57 | 55KBE03 |
| | 120 | 70 | 49 | 2 | 0.6 | 55KDE13 | 221000 | 297000 | 67 | 113 | 2 | 0.6 | 0.83 | 0.82 | 1.22 | 0.80 | 3.54 | 55KDE13 |
| 60 | 110 | 53 | 43.5 | 2 | 0.6 | 60KBE02 | 182000 | 254000 | 70 | 103 | 2 | 0.6 | 0.40 | 1.67 | 2.48 | 1.63 | 2.04 | 60KBE02 |
| | 110 | 66 | 54.5 | 2 | 0.6 | 60KBE22 | 226000 | 334000 | 70 | 104 | 2 | 0.6 | 0.40 | 1.67 | 2.48 | 1.63 | 2.57 | 60KBE22 |
| | 130 | 74 | 59 | 2.5 | 1 | 60KBE03 | 297000 | 401000 | 74 | 120 | 2.5 | 1 | 0.35 | 1.96 | 2.91 | 1.91 | 4.46 | 60KBE03 |
| | 130 | 74 | 51 | 2.5 | 1 | 60KDE13 | 262000 | 359000 | 74 | 124 | 2.5 | 1 | 0.83 | 0.82 | 1.22 | 0.8 | 4.45 | 60KDE13 |
| 65 | 120 | 56 | 46.5 | 2 | 0.6 | 65KBE02 | 220000 | 311000 | 75 | 113 | 2 | 0.6 | 0.40 | 1.67 | 2.48 | 1.63 | 2.84 | 65KBE02 |
| | 120 | 73 | 61.5 | 2 | 0.6 | 65KBE22 | 270000 | 406000 | 75 | 115 | 2 | 0.6 | 0.40 | 1.67 | 2.48 | 1.63 | 3.4 | 65KBE22 |
| | 140 | 79 | 63 | 2.5 | 1 | 65KBE03 | 349000 | 478000 | 79 | 130 | 2.5 | 1 | 0.35 | 1.96 | 2.91 | 1.91 | 5.51 | 65KBE03 |
| | 140 | 79 | 53 | 2.5 | 1 | 65KDE13 | 302000 | 417000 | 79 | 133 | 2.5 | 1 | 0.83 | 0.82 | 1.22 | 0.80 | 5.3 | 65KDE13 |
| 70 | 125 | 59 | 48.5 | 2 | 0.6 | 70KBE02 | 236000 | 346000 | 80 | 118 | 2 | 0.6 | 0.42 | 1.61 | 2.39 | 1.57 | 2.87 | 70KBE02 |
| | 125 | 74 | 61.5 | 2 | 0.6 | 70KBE22 | 290000 | 450000 | 80 | 119 | 2 | 0.6 | 0.42 | 1.61 | 2.39 | 1.57 | 3.7 | 70KBE22 |
| | 150 | 83 | 67 | 2.5 | 1 | 70KBE03 | 394000 | 546000 | 84 | 140 | 2.5 | 1 | 0.35 | 1.96 | 2.91 | 1.91 | 6.65 | 70KBE03 |
| | 150 | 83 | 57 | 2.5 | 1 | 70KDE13 | 338000 | 470000 | 84 | 142 | 2.5 | 1 | 0.83 | 0.82 | 1.22 | 0.8 | 6.48 | 70KDE13 |
| 75 | 130 | 62 | 51.5 | 2 | 0.6 | 75KBE02 | 244000 | 362000 | 85 | 124 | 2 | 0.6 | 0.44 | 1.55 | 2.31 | 1.52 | 3.12 | 75KBE02 |
| | 130 | 74 | 61.5 | 2 | 0.6 | 75KBE22 | 298000 | 469000 | 85 | 125 | 2 | 0.6 | 0.44 | 1.55 | 2.31 | 1.52 | 3.85 | 75KBE22 |
| | 160 | 87 | 69 | 2.5 | 1 | 75KBE03 | 429000 | 594000 | 89 | 149 | 2.5 | 1 | 0.35 | 1.96 | 2.91 | 1.91 | 7.8 | 75KBE03 |

# Double-row Tapered Roller Bearings - Outward

Bore Diameter: 80～120mm

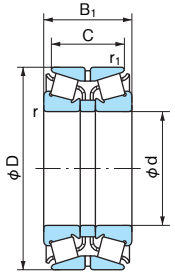


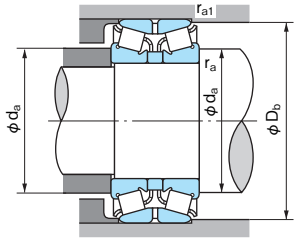


**Dynamic equivalent radial load**

Pr=XFr+YFa

| $\frac{Fa}{Fr} \leqq e$ | | $\frac{Fa}{Fr} > e$ | |
|---|---|---|---|
| X | Y | X | Y |
| 1 | $Y_1$ | 0.67 | $Y_2$ |

Values e, $Y_1$ and $Y_2$ from table.

**Static equivalent radial load**

$P_{or}=F_r+Y_0F_a$

Values $Y_0$ from table.

1N=0.102kgf

| Boundary dimensions (mm) | | | | | | Bearing No. | Basic dynamic load rating Cr (N) | Basic static load rating Cor (N) | Abutment and fillet dimensions (mm) | | | | Constant e | Axial load factor | | | Mass (kg) | Bearing No. |
|---|---|---|---|---|---|---|---|---|---|---|---|---|---|---|---|---|---|---|
| d | D | $B_1$ | C | r (min) | $r_1$ (min) | | | | da (min) | Db (min) | ra (max) | $r_{a1}$ (max) | | $Y_1$ | $Y_2$ | $Y_0$ | | |
| 80 | 140 | 64 | 51.5 | 2 | 0.6 | **80KBE02** | 277000 | 405000 | 92 | 132 | 2 | 0.6 | 0.42 | 1.61 | 2.39 | 1.57 | 3.76 | **80KBE02** |
| | 140 | 78 | 63.5 | 2 | 0.6 | **80KBE22** | 347000 | 542000 | 92 | 134 | 2 | 0.6 | 0.42 | 1.61 | 2.39 | 1.57 | 4.71 | **80KBE22** |
| | 170 | 92 | 73 | 2.5 | 1 | **80KBE03** | 504000 | 711000 | 94 | 159 | 2.5 | 1 | 0.35 | 1.96 | 2.91 | 1.91 | 9.44 | **80KBE03** |
| 85 | 150 | 70 | 57 | 2 | 0.6 | **85KBE02** | 313000 | 463000 | 97 | 141 | 2 | 0.6 | 0.42 | 1.61 | 2.39 | 1.57 | 4.79 | **85KBE02** |
| | 150 | 86 | 69 | 2 | 0.6 | **85KBE22** | 398000 | 630000 | 97 | 142 | 2 | 0.6 | 0.42 | 1.61 | 2.39 | 1.57 | 6.05 | **85KBE22** |
| | 180 | 98 | 77 | 3 | 1 | **85KBE03** | 522000 | 733000 | 103 | 167 | 3 | 1 | 0.35 | 1.96 | 2.91 | 1.91 | 11 | **85KBE03** |
| 90 | 160 | 74 | 61 | 2 | 0.6 | **90KBE02** | 350000 | 522000 | 102 | 150 | 2 | 0.6 | 0.42 | 1.61 | 2.39 | 1.57 | 5.85 | **90KBE02** |
| | 160 | 94 | 77 | 2 | 0.6 | **90KBE22** | 451000 | 724000 | 102 | 152 | 2 | 0.6 | 0.42 | 1.61 | 2.39 | 1.57 | 7.53 | **90KBE22** |
| | 190 | 102 | 81 | 3 | 1 | **90KBE03** | 576000 | 812000 | 108 | 177 | 3 | 1 | 0.35 | 1.96 | 2.91 | 1.91 | 13 | **90KBE03** |
| 95 | 170 | 78 | 63 | 2.5 | 1 | **95KBE02** | 396000 | 598000 | 109 | 159 | 2.5 | 1 | 0.42 | 1.61 | 2.39 | 1.57 | 7.01 | **95KBE02** |
| | 170 | 100 | 83 | 2.5 | 1 | **95KBE22** | 533000 | 877000 | 109 | 161 | 2.5 | 1 | 0.42 | 1.61 | 2.39 | 1.57 | 9.25 | **95KBE22** |
| | 200 | 108 | 85 | 3 | 1 | **95KBE03** | 543000 | 736000 | 113 | 186 | 3 | 1 | 0.35 | 1.96 | 2.91 | 1.91 | 14.8 | **95KBE03** |
| 100 | 180 | 83 | 67 | 2.5 | 1 | **100KBE02** | 443000 | 676000 | 114 | 168 | 2.5 | 1 | 0.42 | 1.61 | 2.39 | 1.57 | 8.33 | **100KBE02** |
| | 180 | 107 | 87 | 2.5 | 1 | **100KBE22** | 596000 | 990000 | 114 | 171 | 2.5 | 1 | 0.42 | 1.61 | 2.39 | 1.57 | 11.1 | **100KBE22** |
| | 215 | 112 | 87 | 3 | 1 | **100KBE03** | 589000 | 798000 | 118 | 200 | 3 | 1 | 0.35 | 1.96 | 2.91 | 1.91 | 18.1 | **100KBE03** |
| 105 | 190 | 88 | 70 | 2.5 | 1 | **105KBE02** | 494000 | 761000 | 119 | 178 | 2.5 | 1 | 0.42 | 1.61 | 2.39 | 1.57 | 9.87 | **105KBE02** |
| | 190 | 115 | 95 | 2.5 | 1 | **105KBE22** | 672000 | 1130000 | 119 | 180 | 2.5 | 1 | 0.42 | 1.61 | 2.39 | 1.57 | 13.5 | **105KBE22** |
| | 225 | 116 | 91 | 3 | 1 | **105KBE03** | 636000 | 864000 | 123 | 209 | 3 | 1 | 0.35 | 1.96 | 2.91 | 1.91 | 20.7 | **105KBE03** |
| 110 | 180 | 70 | 56 | 2.5 | 0.6 | **110KBE031** | 324000 | 533000 | 122 | 168 | 2 | 0.6 | 0.35 | 1.92 | 2.86 | 1.88 | 6.43 | **110KBE031** |
| | 180 | 56 | 50 | 2.5 | 0.6 | **110KBE131** | 245000 | 388000 | 122 | 168 | 2 | 0.6 | 0.35 | 1.95 | 2.90 | 1.91 | 5.13 | **110KBE131** |
| | 200 | 92 | 74 | 2.5 | 1 | **110KBE02** | 556000 | 868000 | 124 | 188 | 2.5 | 1 | 0.42 | 1.61 | 2.39 | 1.57 | 11.6 | **110KBE02** |
| | 200 | 121 | 101 | 2.5 | 1 | **110KBE22** | 750000 | 1280000 | 124 | 190 | 2.5 | 1 | 0.42 | 1.61 | 2.39 | 1.57 | 15.9 | **110KBE22** |
| | 240 | 118 | 93 | 3 | 1 | **110KBE03** | 824000 | 1180000 | 128 | 222 | 3 | 1 | 0.35 | 1.96 | 2.91 | 1.91 | 23.8 | **110KBE03** |
| 120 | 180 | 58 | 46 | 2.5 | 0.6 | **120KBE030** | 247000 | 460000 | 132 | 169 | 2 | 0.6 | 0.35 | 1.95 | 2.90 | 1.91 | 4.66 | **120KBE030** |
| | 180 | 46 | 41 | 2.5 | 0.6 | **120KBE130** | 185000 | 317000 | 132 | 170 | 2 | 0.6 | 0.35 | 1.95 | 2.90 | 1.91 | 3.81 | **120KBE130** |
| | 200 | 78 | 62 | 2.5 | 0.6 | **120KBE031** | 387000 | 672000 | 132 | 185 | 2 | 0.6 | 0.35 | 1.95 | 2.90 | 1.91 | 9.14 | **120KBE031** |
| | 200 | 62 | 55 | 2.5 | 0.6 | **120KBE131** | 292000 | 470000 | 132 | 184 | 2 | 0.6 | 0.35 | 1.95 | 2.90 | 1.91 | 7.28 | **120KBE131** |
| | 215 | 97 | 78 | 2.5 | 1 | **120KBE02** | 595000 | 945000 | 134 | 203 | 2.5 | 1 | 0.44 | 1.55 | 2.31 | 1.52 | 13.9 | **120KBE02** |
| | 215 | 132 | 109 | 2.5 | 1 | **120KBE22** | 806000 | 1380000 | 134 | 204 | 2.5 | 1 | 0.44 | 1.55 | 2.31 | 1.52 | 19.8 | **120KBE22** |
| | 260 | 128 | 101 | 3 | 1 | **120KBE03** | 864000 | 1220000 | 138 | 239 | 3 | 1 | 0.35 | 1.96 | 2.91 | 1.91 | 30.6 | **120KBE03** |

# Double-row Tapered Roller Bearings - Outward

Bore Diameter: 130～170mm

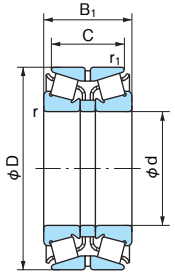


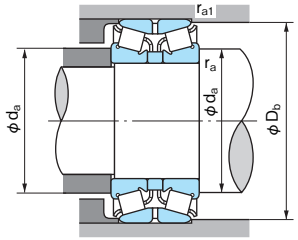


**Dynamic equivalent radial load**

Pr=XFr+YFa

| $\frac{Fa}{Fr} \leqq e$ | | $\frac{Fa}{Fr} > e$ | |
|---|---|---|---|
| X | Y | X | Y |
| 1 | $Y_1$ | 0.67 | $Y_2$ |

Values e, $Y_1$ and $Y_2$ from table.

**Static equivalent radial load**

$P_{or}=F_r+Y_0F_a$

Values $Y_0$ from table.

1N=0.102kgf

| Boundary dimensions (mm) | | | | | | Bearing No. | Basic dynamic load rating Cr (N) | Basic static load rating Cor (N) | Abutment and fillet dimensions (mm) | | | | Constant e | Axial load factor | | | Mass (kg) | Bearing No. |
|---|---|---|---|---|---|---|---|---|---|---|---|---|---|---|---|---|---|---|
| d | D | $B_1$ | C | r (min) | $r_1$ (min) | | | | da (min) | Db (min) | ra (max) | $r_{a1}$ (max) | | $Y_1$ | $Y_2$ | $Y_0$ | | |
| 130 | 200 | 65 | 52 | 2.5 | 0.6 | **130KBE030** | 319000 | 618000 | 142 | 185 | 2 | 0.6 | 0.35 | 1.95 | 2.90 | 1.91 | 7.06 | **130KBE030** |
| | 200 | 52 | 46 | 2.5 | 0.6 | **130KBE130** | 239000 | 425000 | 142 | 187 | 2 | 0.6 | 0.35 | 1.95 | 2.90 | 1.91 | 5.57 | **130KBE130** |
| | 210 | 80 | 64 | 2.5 | 0.6 | **130KBE031** | 424000 | 723000 | 142 | 198 | 2 | 0.6 | 0.36 | 1.87 | 2.79 | 1.83 | 9.57 | **130KBE031** |
| | 210 | 64 | 57 | 2.5 | 0.6 | **130KBE131** | 322000 | 535000 | 142 | 196 | 2 | 0.6 | 0.36 | 1.87 | 2.79 | 1.83 | 7.81 | **130KBE131** |
| | 230 | 98 | 78.5 | 3 | 1 | **130KBE02** | 646000 | 1020000 | 148 | 218 | 3 | 1 | 0.44 | 1.55 | 2.31 | 1.52 | 15.7 | **130KBE02** |
| | 230 | 145 | 117.5 | 3 | 1 | **130KBE22** | 949000 | 1660000 | 148 | 219 | 3 | 1 | 0.44 | 1.55 | 2.31 | 1.52 | 24.1 | **130KBE22** |
| | 280 | 137 | 107.5 | 4 | 1.5 | **130KBE03** | 965000 | 1370000 | 152 | 255 | 4 | 1.5 | 0.35 | 1.96 | 2.91 | 1.91 | 38.1 | **130KBE03** |
| 140 | 210 | 66 | 53 | 2.5 | 0.6 | **140KBE030** | 360000 | 639000 | 152 | 199 | 2 | 0.6 | 0.47 | 1.43 | 2.12 | 1.40 | 7.18 | **140KBE030** |
| | 210 | 53 | 47 | 2.5 | 0.6 | **140KBE130** | 239000 | 404000 | 152 | 196 | 2 | 0.6 | 0.33 | 2.03 | 3.02 | 1.98 | 5.85 | **140KBE130** |
| | 225 | 85 | 68 | 3 | 1 | **140KBE031** | 475000 | 836000 | 154 | 212 | 2.5 | 1 | 0.35 | 1.95 | 2.90 | 1.91 | 11.8 | **140KBE031** |
| | 225 | 68 | 61 | 3 | 1 | **140KBE131** | 360000 | 564000 | 154 | 210 | 2.5 | 1 | 0.35 | 1.95 | 2.90 | 1.91 | 9.58 | **140KBE131** |
| | 250 | 102 | 82.5 | 3 | 1 | **140KBE02** | 694000 | 1080000 | 158 | 237 | 3 | 1 | 0.44 | 1.55 | 2.31 | 1.52 | 19.7 | **140KBE02** |
| | 250 | 153 | 125.5 | 3 | 1 | **140KBE22** | 1090000 | 1920000 | 158 | 238 | 3 | 1 | 0.44 | 1.55 | 2.31 | 1.52 | 30.2 | **140KBE22** |
| | 300 | 145 | 115.5 | 4 | 1.5 | **140KBE03** | 1070000 | 1520000 | 162 | 273 | 4 | 1.5 | 0.35 | 1.96 | 2.91 | 1.91 | 46.6 | **140KBE03** |
| 150 | 225 | 70 | 56 | 3 | 1 | **150KBE030** | 377000 | 703000 | 164 | 213 | 2.5 | 1 | 0.33 | 2.03 | 3.02 | 1.98 | 8.82 | **150KBE030** |
| | 225 | 56 | 50 | 3 | 1 | **150KBE130** | 278000 | 476000 | 164 | 213 | 2.5 | 1 | 0.33 | 2.03 | 3.02 | 1.98 | 7.09 | **150KBE130** |
| | 250 | 100 | 80 | 3 | 1 | **150KBE031** | 595000 | 1070000 | 164 | 234 | 2.5 | 1 | 0.35 | 1.95 | 2.90 | 1.91 | 17.6 | **150KBE031** |
| | 250 | 80 | 71 | 3 | 1 | **150KBE131** | 467000 | 786000 | 164 | 233 | 2.5 | 1 | 0.35 | 1.95 | 2.90 | 1.91 | 14.6 | **150KBE131** |
| | 270 | 109 | 87 | 3 | 1 | **150KBE02** | 799000 | 1250000 | 168 | 255 | 3 | 1 | 0.44 | 1.55 | 2.31 | 1.52 | 24.6 | **150KBE02** |
| | 270 | 164 | 130 | 3 | 1 | **150KBE22** | 1210000 | 2130000 | 168 | 254 | 3 | 1 | 0.44 | 1.55 | 2.31 | 1.52 | 38 | **150KBE22** |
| | 320 | 154 | 120 | 4 | 1.5 | **150KBE03** | 1230000 | 1920000 | 172 | 292 | 4 | 1.5 | 0.35 | 1.96 | 2.91 | 1.91 | 56 | **150KBE03** |
| 160 | 240 | 75 | 60 | 3 | 1 | **160KBE030** | 406000 | 756000 | 174 | 226 | 2.5 | 1 | 0.33 | 2.03 | 3.02 | 1.98 | 10.6 | **160KBE030** |
| | 240 | 60 | 53 | 3 | 1 | **160KBE130** | 324000 | 565000 | 174 | 228 | 2.5 | 1 | 0.33 | 2.03 | 3.02 | 1.98 | 8.71 | **160KBE130** |
| | 270 | 108 | 86 | 3 | 1 | **160KBE031** | 727000 | 1270000 | 174 | 252 | 2.5 | 1 | 0.35 | 1.95 | 2.90 | 1.91 | 23.1 | **160KBE031** |
| | 270 | 86 | 76 | 3 | 1 | **160KBE131** | 592000 | 950000 | 174 | 252 | 2.5 | 1 | 0.35 | 1.95 | 2.90 | 1.91 | 18.8 | **160KBE131** |
| | 290 | 115 | 91 | 3 | 1 | **160KBE02** | 827000 | 1270000 | 178 | 269 | 3 | 1 | 0.44 | 1.55 | 2.31 | 1.52 | 29.9 | **160KBE02** |
| | 290 | 178 | 144 | 3 | 1 | **160KBE22** | 1360000 | 2420000 | 178 | 274 | 3 | 1 | 0.44 | 1.55 | 2.31 | 1.52 | 47.6 | **160KBE22** |
| 170 | 260 | 84 | 67 | 3 | 1 | **170KBE030** | 502000 | 969000 | 184 | 244 | 2.5 | 1 | 0.33 | 2.03 | 3.02 | 1.98 | 14.7 | **170KBE030** |
| | 260 | 67 | 60 | 3 | 1 | **170KBE130** | 382000 | 642000 | 184 | 243 | 2.5 | 1 | 0.33 | 2.03 | 3.02 | 1.98 | 11.4 | **170KBE130** |
| | 280 | 110 | 88 | 3 | 1 | **170KBE031** | 776000 | 1390000 | 184 | 260 | 2.5 | 1 | 0.33 | 2.06 | 3.06 | 2.01 | 24.7 | **170KBE031** |
| | 280 | 88 | 78 | 3 | 1 | **170KBE131** | 599000 | 1050000 | 184 | 263 | 2.5 | 1 | 0.33 | 2.06 | 3.06 | 2.01 | 19.8 | **170KBE131** |
| | 310 | 125 | 97 | 4 | 1.5 | **170KBE02** | 932000 | 1450000 | 192 | 288 | 4 | 1.5 | 0.44 | 1.55 | 2.31 | 1.52 | 37.5 | **170KBE02** |
| | 310 | 192 | 152 | 4 | 1.5 | **170KBE22** | 1540000 | 2760000 | 192 | 294 | 4 | 1.5 | 0.44 | 1.55 | 2.31 | 1.52 | 58.8 | **170KBE22** |

# Double-row Tapered Roller Bearings - Outward

Bore Diameter: 180～280mm

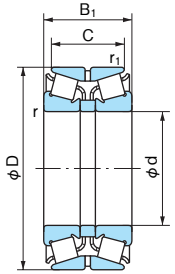


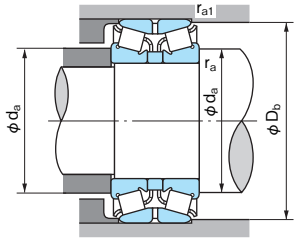


**■Dynamic equivalent radial load**

Pr=XFr+YFa

| $\frac{Fa}{Fr} \leqq e$ | | $\frac{Fa}{Fr} > e$ | |
|---|---|---|---|
| X | Y | X | Y |
| 1 | $Y_1$ | 0.67 | $Y_2$ |

Values e, $Y_1$ and $Y_2$ from table.

**■Static equivalent radial load**

$P_{or}=F_r+Y_0F_a$

Values $Y_0$ from table.

1N=0.102kgf

| Boundary dimensions (mm) | | | | | | Bearing No. | Basic dynamic load rating Cr (N) | Basic static load rating Cor (N) | Abutment and fillet dimensions (mm) | | | | Constant e | Axial load factor | | | Mass (kg) | Bearing No. |
|---|---|---|---|---|---|---|---|---|---|---|---|---|---|---|---|---|---|---|
| d | D | $B_1$ | C | r (min) | $r_1$ (min) | | | | da (min) | Db (min) | ra (max) | $r_{a1}$ (max) | | $Y_1$ | $Y_2$ | $Y_0$ | | |
| 180 | 280 | 93 | 74 | 3 | 1 | **180KBE030** | 584000 | 1080000 | 194 | 261 | 2.5 | 1 | 0.33 | 2.03 | 3.02 | 1.98 | 19.0 | **180KBE030** |
| | 280 | 74 | 66 | 3 | 1 | **180KBE130** | 464000 | 801000 | 194 | 263 | 2.5 | 1 | 0.33 | 2.03 | 3.02 | 1.98 | 15.5 | **180KBE130** |
| | 300 | 120 | 96 | 4 | 1.5 | **180KBE031** | 894000 | 1630000 | 198 | 279 | 3 | 1.5 | 0.33 | 2.06 | 3.06 | 2.01 | 31.3 | **180KBE031** |
| | 300 | 96 | 85 | 4 | 1.5 | **180KBE131** | 693000 | 1240000 | 198 | 277 | 3 | 1.5 | 0.33 | 2.06 | 3.06 | 2.01 | 25.8 | **180KBE131** |
| | 320 | 127 | 99 | 4 | 1.5 | **180KBE02** | 1060000 | 1470000 | 202 | 297 | 4 | 1.5 | 0.45 | 1.5 | 2.23 | 1.47 | 40.1 | **180KBE02** |
| | 320 | 192 | 152 | 4 | 1.5 | **180KBE22** | 1640000 | 3030000 | 202 | 303 | 4 | 1.5 | 0.45 | 1.5 | 2.23 | 1.47 | 62.5 | **180KBE22** |
| 190 | 290 | 94 | 75 | 3 | 1 | **190KBE030** | 632000 | 1170000 | 204 | 274 | 2.5 | 1 | 0.33 | 2.03 | 3.02 | 1.98 | 20.0 | **190KBE030** |
| | 290 | 75 | 67 | 3 | 1 | **190KBE130** | 487000 | 866000 | 204 | 272 | 2.5 | 1 | 0.32 | 2.12 | 3.15 | 2.07 | 16.5 | **190KBE130** |
| | 320 | 130 | 104 | 4 | 1.5 | **190KBE031** | 1020000 | 1860000 | 208 | 298 | 3 | 1.5 | 0.35 | 1.95 | 2.90 | 1.91 | 39.0 | **190KBE031** |
| | 320 | 104 | 92 | 4 | 1.5 | **190KBE131** | 808000 | 1450000 | 208 | 298 | 3 | 1.5 | 0.35 | 1.95 | 2.90 | 1.91 | 31.9 | **190KBE131** |
| | 340 | 133 | 105 | 4 | 1.5 | **190KBE02** | 1250000 | 2060000 | 212 | 318 | 4 | 1.5 | 0.44 | 1.55 | 2.31 | 1.52 | 47.8 | **190KBE02** |
| | 340 | 204 | 160 | 4 | 1.5 | **190KBE22** | 1870000 | 3480000 | 212 | 323 | 4 | 1.5 | 0.44 | 1.55 | 2.31 | 1.52 | 75.1 | **190KBE22** |
| 200 | 310 | 103 | 82 | 3 | 1 | **200KBE030** | 713000 | 1380000 | 212 | 295 | 2.5 | 1 | 0.33 | 2.03 | 3.02 | 1.98 | 24.5 | **200KBE030** |
| | 310 | 82 | 73 | 3 | 1 | **200KBE130** | 572000 | 1040000 | 214 | 288 | 2.5 | 1 | 0.32 | 2.12 | 3.15 | 2.07 | 21.4 | **200KBE130** |
| | 340 | 140 | 112 | 4 | 1.5 | **200KBE031** | 1110000 | 2040000 | 218 | 319 | 3 | 1.5 | 0.35 | 1.95 | 2.90 | 1.91 | 48.2 | **200KBE031** |
| | 340 | 112 | 100 | 4 | 1.5 | **200KBE131** | 939000 | 1580000 | 218 | 316 | 3 | 1.5 | 0.35 | 1.95 | 2.90 | 1.91 | 39.6 | **200KBE131** |
| | 360 | 142 | 110 | 4 | 1.5 | **200KBE02** | 1360000 | 2240000 | 222 | 336 | 4 | 1.5 | 0.44 | 1.55 | 2.31 | 1.52 | 56.5 | **200KBE02** |
| | 360 | 218 | 174 | 4 | 1.5 | **200KBE22** | 2130000 | 3760000 | 222 | 340 | 4 | 1.5 | 0.41 | 1.66 | 2.47 | 1.62 | 88.2 | **200KBE22** |
| 220 | 340 | 113 | 90 | 4 | 1.5 | **220KBE030** | 832000 | 1620000 | 238 | 319 | 3 | 1.5 | 0.32 | 2.12 | 3.15 | 2.07 | 34.2 | **220KBE030** |
| | 340 | 90 | 80 | 4 | 1.5 | **220KBE130** | 677000 | 1240000 | 238 | 318 | 3 | 1.5 | 0.32 | 2.12 | 3.15 | 2.07 | 27.8 | **220KBE130** |
| | 370 | 150 | 120 | 5 | 1.5 | **220KBE031** | 1330000 | 2470000 | 242 | 343 | 4 | 1.5 | 0.35 | 1.95 | 2.90 | 1.91 | 60.1 | **220KBE031** |
| | 370 | 120 | 107 | 5 | 1.5 | **220KBE131** | 1070000 | 1810000 | 242 | 346 | 4 | 1.5 | 0.35 | 1.95 | 2.90 | 1.91 | 49.1 | **220KBE131** |
| 240 | 360 | 115 | 92 | 4 | 1.5 | **240KBE030** | 990000 | 1980000 | 258 | 341 | 3 | 1.5 | 0.32 | 2.12 | 3.15 | 2.07 | 36.9 | **240KBE030** |
| | 360 | 92 | 82 | 4 | 1.5 | **240KBE130** | 768000 | 1430000 | 258 | 338 | 3 | 1.5 | 0.32 | 2.12 | 3.15 | 2.07 | 29.6 | **240KBE130** |
| | 400 | 160 | 128 | 5 | 1.5 | **240KBE031** | 1540000 | 3060000 | 262 | 373 | 4 | 1.5 | 0.35 | 1.95 | 2.90 | 1.91 | 76.2 | **240KBE031** |
| | 400 | 128 | 114 | 5 | 1.5 | **240KBE131** | 1190000 | 2180000 | 262 | 377 | 4 | 1.5 | 0.35 | 1.95 | 2.90 | 1.91 | 59.0 | **240KBE131** |
| 260 | 400 | 130 | 104 | 5 | 1.5 | **260KBE030** | 1210000 | 2480000 | 282 | 376 | 4 | 1.5 | 0.32 | 2.12 | 3.15 | 2.07 | 54.8 | **260KBE030** |
| | 400 | 104 | 92 | 5 | 1.5 | **260KBE130** | 935000 | 1830000 | 282 | 373 | 4 | 1.5 | 0.33 | 2.03 | 3.02 | 1.98 | 44.6 | **260KBE130** |
| | 440 | 180 | 144 | 5 | 1.5 | **260KBE031** | 2010000 | 3960000 | 282 | 409 | 4 | 1.5 | 0.35 | 1.95 | 2.90 | 1.91 | 105 | **260KBE031** |
| | 440 | 144 | 128 | 5 | 1.5 | **260KBE131** | 1510000 | 2880000 | 282 | 410 | 4 | 1.5 | 0.35 | 1.95 | 2.90 | 1.91 | 83.8 | **260KBE131** |
| 280 | 420 | 133 | 106 | 5 | 1.5 | **280KBE030** | 1250000 | 2610000 | 302 | 394 | 4 | 1.5 | 0.33 | 2.03 | 3.02 | 1.98 | 58.9 | **280KBE030** |
| | 420 | 106 | 94 | 5 | 1.5 | **280KBE130** | 1010000 | 1970000 | 302 | 395 | 4 | 1.5 | 0.33 | 2.03 | 3.02 | 1.98 | 46.9 | **280KBE130** |
| | 460 | 183 | 146 | 6 | 2 | **280KBE031** | 2040000 | 3940000 | 308 | 434 | 5 | 2 | 0.35 | 1.95 | 2.90 | 1.91 | 111 | **280KBE031** |
| | 460 | 146 | 130 | 6 | 2 | **280KBE131** | 1550000 | 2930000 | 308 | 430 | 5 | 2 | 0.35 | 1.95 | 2.90 | 1.91 | 90.0 | **280KBE131** |

# Double-row Tapered Roller Bearings - Outward

Bore Diameter: 300～460mm

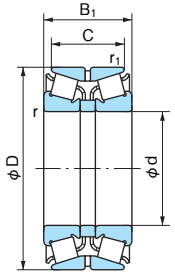


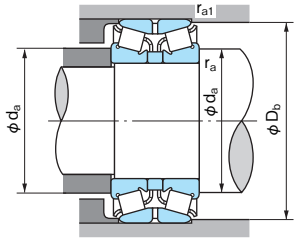


**Dynamic equivalent radial load**

Pr=XFr+YFa

| $\frac{Fa}{Fr} \leqq e$ | | $\frac{Fa}{Fr} > e$ | |
|---|---|---|---|
| X | Y | X | Y |
| 1 | $Y_1$ | 0.67 | $Y_2$ |

Values e, $Y_1$ and $Y_2$ from table.

**Static equivalent radial load**

$P_{or}=F_r+Y_0F_a$

Values $Y_0$ from table.

1N=0.102kgf

| Boundary dimensions (mm) | | | | | | Bearing No. | Basic dynamic load rating Cr (N) | Basic static load rating Cor (N) | Abutment and fillet dimensions (mm) | | | | Constant e | Axial load factor | | | Mass (kg) | Bearing No. |
|---|---|---|---|---|---|---|---|---|---|---|---|---|---|---|---|---|---|---|
| d | D | $B_1$ | C | r (min) | $r_1$ (min) | | | | da (min) | Db (min) | ra (max) | $r_{a1}$ (max) | | $Y_1$ | $Y_2$ | $Y_0$ | | |
| 300 | 460 | 148 | 118 | 5 | 1.5 | **300KBE030** | 1630000 | 3230000 | 322 | 433 | 4 | 1.5 | 0.32 | 2.12 | 3.15 | 2.07 | 80.2 | **300KBE030** |
| | 460 | 118 | 105 | 5 | 1.5 | **300KBE130** | 1290000 | 2400000 | 322 | 436 | 4 | 1.5 | 0.32 | 2.12 | 3.15 | 2.07 | 64.6 | **300KBE130** |
| | 500 | 200 | 160 | 6 | 2 | **300KBE031** | 2270000 | 4630000 | 328 | 466 | 5 | 2 | 0.35 | 1.95 | 2.90 | 1.91 | 144 | **300KBE031** |
| | 500 | 160 | 142 | 6 | 2 | **300KBE131** | 1980000 | 3540000 | 328 | 469 | 5 | 2 | 0.35 | 1.95 | 2.90 | 1.91 | 116 | **300KBE131** |
| 320 | 480 | 151 | 121 | 5 | 1.5 | **320KBE030** | 1650000 | 3410000 | 342 | 452 | 4 | 1.5 | 0.32 | 2.12 | 3.15 | 2.07 | 87.7 | **320KBE030** |
| | 480 | 121 | 108 | 5 | 1.5 | **320KBE130** | 1430000 | 2700000 | 342 | 452 | 4 | 1.5 | 0.32 | 2.12 | 3.15 | 2.07 | 71.6 | **320KBE130** |
| | 540 | 220 | 176 | 6 | 2 | **320KBE031** | 2610000 | 5390000 | 348 | 497 | 5 | 2 | 0.35 | 1.95 | 2.90 | 1.91 | 190 | **320KBE031** |
| | 540 | 176 | 157 | 6 | 2 | **320KBE131** | 2440000 | 4570000 | 348 | 502 | 5 | 2 | 0.35 | 1.95 | 2.90 | 1.91 | 154 | **320KBE131** |
| 340 | 520 | 165 | 133 | 6 | 2 | **340KBE030** | 1930000 | 4060000 | 368 | 491 | 5 | 2 | 0.32 | 2.12 | 3.15 | 2.07 | 117 | **340KBE030** |
| | 520 | 133 | 118 | 6 | 2 | **340KBE130** | 1550000 | 3070000 | 368 | 489 | 5 | 2 | 0.32 | 2.12 | 3.15 | 2.07 | 95.3 | **340KBE130** |
| | 580 | 238 | 190 | 6 | 2 | **340KBE031** | 3160000 | 6340000 | 368 | 543 | 5 | 2 | 0.35 | 1.95 | 2.90 | 1.91 | 244 | **340KBE031** |
| | 580 | 190 | 169 | 6 | 2 | **340KBE131** | 2540000 | 4620000 | 368 | 539 | 5 | 2 | 0.35 | 1.95 | 2.90 | 1.91 | 198 | **340KBE131** |
| 360 | 540 | 169 | 134 | 6 | 2 | **360KBE030** | 2020000 | 4230000 | 388 | 512 | 5 | 2 | 0.32 | 2.12 | 3.15 | 2.07 | 124 | **360KBE030** |
| | 540 | 134 | 120 | 6 | 2 | **360KBE130** | 1660000 | 3290000 | 388 | 510 | 5 | 2 | 0.32 | 2.12 | 3.15 | 2.07 | 93.0 | **360KBE130** |
| | 600 | 240 | 192 | 6 | 2 | **360KBE031** | 3660000 | 7230000 | 388 | 568 | 5 | 2 | 0.39 | 1.74 | 2.59 | 1.70 | 254 | **360KBE031** |
| | 600 | 192 | 171 | 6 | 2 | **360KBE131** | 2680000 | 4880000 | 388 | 557 | 5 | 2 | 0.35 | 1.94 | 2.90 | 1.91 | 206 | **360KBE131** |
| 380 | 560 | 171 | 135 | 6 | 2 | **380KBE030** | 2240000 | 4670000 | 408 | 531 | 5 | 2 | 0.39 | 1.74 | 2.59 | 1.70 | 129 | **380KBE030** |
| | 560 | 135 | 122 | 6 | 2 | **380KBE130** | 1740000 | 3560000 | 408 | 530 | 5 | 2 | 0.32 | 2.12 | 3.15 | 2.07 | 100 | **380KBE130** |
| | 620 | 243 | 194 | 6 | 2 | **380KBE031** | 3490000 | 7360000 | 408 | 578 | 5 | 2 | 0.35 | 1.95 | 2.59 | 1.91 | 265 | **380KBE031** |
| | 620 | 194 | 173 | 6 | 2 | **380KBE131** | 2870000 | 5220000 | 408 | 582 | 5 | 2 | 0.39 | 1.74 | 2.90 | 1.71 | 215 | **380KBE131** |
| 400 | 600 | 185 | 148 | 6 | 2 | **400KBE030** | 2420000 | 5150000 | 428 | 563 | 5 | 2 | 0.32 | 2.12 | 3.15 | 2.07 | 167 | **400KBE030** |
| | 600 | 148 | 132 | 6 | 2 | **400KBE130** | 1870000 | 3720000 | 428 | 560 | 5 | 2 | 0.32 | 2.12 | 3.15 | 2.07 | 135 | **400KBE130** |
| | 650 | 250 | 200 | 6 | 3 | **400KBE031** | 4060000 | 8850000 | 428 | 610 | 5 | 2.5 | 0.35 | 1.95 | 2.90 | 1.91 | 306 | **400KBE031** |
| | 650 | 200 | 178 | 6 | 3 | **400KBE131** | 2980000 | 5920000 | 428 | 605 | 5 | 2.5 | 0.35 | 1.95 | 2.90 | 1.91 | 243 | **400KBE131** |
| 420 | 620 | 188 | 150 | 6 | 2 | **420KBE030** | 2700000 | 5660000 | 448 | 589 | 5 | 2 | 0.39 | 1.74 | 2.59 | 1.70 | 176 | **420KBE030** |
| | 620 | 150 | 134 | 6 | 2 | **420KBE130** | 2010000 | 4130000 | 448 | 590 | 5 | 2 | 0.33 | 2.03 | 3.02 | 1.98 | 142 | **420KBE130** |
| | 700 | 280 | 224 | 6 | 3 | **420KBE031** | 4810000 | 9620000 | 448 | 659 | 5 | 2.5 | 0.39 | 1.74 | 2.59 | 1.70 | 400 | **420KBE031** |
| | 700 | 224 | 200 | 6 | 3 | **420KBE131** | 3700000 | 6880000 | 448 | 659 | 5 | 2.5 | 0.39 | 1.74 | 2.59 | 1.70 | 325 | **420KBE131** |
| 440 | 650 | 196 | 157 | 6 | 3 | **440KBE030** | 3000000 | 6370000 | 468 | 620 | 5 | 2.5 | 0.39 | 1.74 | 2.59 | 1.70 | 198 | **440KBE030** |
| | 650 | 157 | 140 | 6 | 3 | **440KBE130** | 2260000 | 4430000 | 468 | 622 | 5 | 2.5 | 0.33 | 2.03 | 3.02 | 1.98 | 156 | **440KBE130** |
| | 720 | 283 | 226 | 6 | 3 | **440KBE031** | 4940000 | 10100000 | 468 | 679 | 5 | 2.5 | 0.40 | 1.68 | 2.51 | 1.65 | 418 | **440KBE031** |
| 460 | 680 | 204 | 163 | 6 | 3 | **460KBE030** | 3220000 | 6850000 | 488 | 646 | 5 | 2.5 | 0.39 | 1.74 | 2.59 | 1.70 | 232 | **460KBE030** |
| | 680 | 163 | 145 | 6 | 3 | **460KBE130** | 2500000 | 5340000 | 488 | 637 | 5 | 2.5 | 0.37 | 1.83 | 2.72 | 1.78 | 196 | **460KBE130** |
| | 760 | 300 | 240 | 7.5 | 4 | **460KBE031** | 5680000 | 11600000 | 496 | 718 | 6 | 3 | 0.39 | 1.74 | 2.59 | 1.70 | 506 | **460KBE031** |

# Double-row Tapered Roller Bearings - Outward

Bore Diameter: 480～500mm

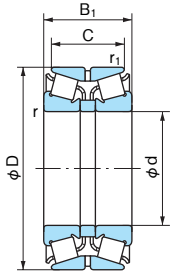


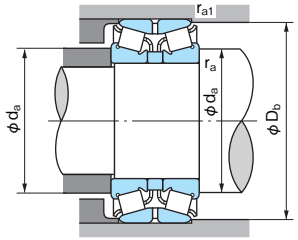


**Dynamic equivalent radial load**

Pr=XFr+YFa

| $\frac{Fa}{Fr} \leqq e$ | | $\frac{Fa}{Fr} > e$ | |
|---|---|---|---|
| X | Y | X | Y |
| 1 | $Y_1$ | 0.67 | $Y_2$ |

Values e, $Y_1$ and $Y_2$ from table.

**Static equivalent radial load**

$P_{or}=F_r+Y_0F_a$

Values $Y_0$ from table.

1N=0.102kgf

| Boundary dimensions (mm) | | | | | | Bearing No. | Basic dynamic load rating Cr (N) | Basic static load rating Cor (N) | | Abutment and fillet dimensions (mm) | | | | Constant e | Axial load factor | | | Mass (kg) | Bearing No. |
|---|---|---|---|---|---|---|---|---|---|---|---|---|---|---|---|---|---|---|---|
| d | D | $B_1$ | C | r (min) | $r_1$ (min) | | | | | da (min) | Db (min) | ra (max) | $r_{a1}$ (max) | | $Y_1$ | $Y_2$ | $Y_0$ | | |
| 480 | 700 | 206 | 165 | 6 | 3 | **480KBE030** | 3220000 | 7230000 | | 508 | 672 | 5 | 2.5 | 0.33 | 2.03 | 3.02 | 1.98 | 240 | **480KBE030** |
| | 700 | 165 | 147 | 6 | 3 | **480KBE130** | 2530000 | 5300000 | | 508 | 666 | 5 | 2.5 | 0.33 | 2.03 | 3.02 | 1.98 | 186 | **480KBE130** |
| | 790 | 310 | 248 | 7.5 | 4 | **480KBE031** | 5990000 | 12400000 | | 516 | 749 | 6 | 3 | 0.39 | 1.74 | 2.59 | 1.70 | 560 | **480KBE031** |
| | 790 | 248 | 221 | 7.5 | 4 | **480KBE131** | 4640000 | 8920000 | | 516 | 742 | 6 | 3 | 0.39 | 1.74 | 2.59 | 1.70 | 457 | **480KBE131** |
| 500 | 720 | 209 | 167 | 6 | 3 | **500KBE030** | 3500000 | 7850000 | | 528 | 690 | 5 | 2.5 | 0.42 | 1.62 | 2.41 | 1.58 | 258 | **500KBE030** |
| | 720 | 167 | 149 | 6 | 3 | **500KBE130** | 2580000 | 5690000 | | 528 | 679 | 5 | 2.5 | 0.40 | 1.71 | 2.54 | 1.67 | 210 | **500KBE130** |
| | 830 | 264 | 235 | 7.5 | 4 | **500KBE131** | 5220000 | 10900000 | | 536 | 776 | 6 | 3 | 0.39 | 1.74 | 2.59 | 1.70 | 559 | **500KBE131** |

# Double-row Tapered Roller Bearings - Inward

Bore Diameter: 110～360mm

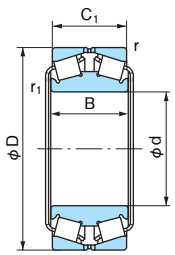


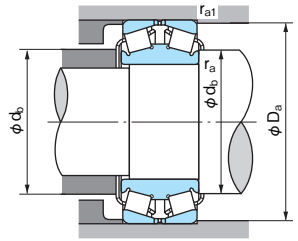


**Dynamic equivalent radial load**

Pr=XFr+YFa

| $\frac{Fa}{Fr} \leqq e$ | | $\frac{Fa}{Fr} > e$ | |
|---|---|---|---|
| X | Y | X | Y |
| 1 | $Y_1$ | 0.67 | $Y_2$ |

Values e, $Y_1$, and $Y_2$ from table.

**Static equivalent radial load**

$P_{or}=F_r+Y_0F_a$

Values $Y_0$ from table.

1N=0.102kgf

| Boundary dimensions (mm) | | | | | | Bearing No. | Basic dynamic load rating Cr (N) | Basic static load rating Cor (N) | Abutment and fillet dimensions (mm) | | | | Constant e | Axial load factor | | | Mass (kg) | Bearing No. |
|---|---|---|---|---|---|---|---|---|---|---|---|---|---|---|---|---|---|---|
| d | D | B | $C_1$ | r (min) | $r_1$ (min) | | | | $d_b$ (min) | $D_a$ (min) | $r_a$ (max) | $r_{a1}$ (max) | | $Y_1$ | $Y_2$ | $Y_0$ | | |
| 110 | 180 | 56 | 56 | 2 | 2.5 | 110KBD031 | 300000 | 505000 | 128 | 160 | 2 | 2 | 0.35 | 1.95 | 2.90 | 1.91 | 5.40 | 110KBD031 |
| 120 | 180 | 46 | 46 | 2 | 2.5 | 120KBD030 | 229000 | 424000 | 138 | 163 | 2 | 2 | 0.26 | 2.55 | 3.80 | 2.50 | 4.08 | 120KBD030 |
| | 200 | 62 | 62 | 2 | 2.5 | 120KBD031 | 353000 | 598000 | 142 | 178 | 2 | 2 | 0.35 | 1.95 | 2.90 | 1.91 | 7.92 | 120KBD031 |
| 130 | 200 | 52 | 52 | 2 | 2.5 | 130KBD030 | 300000 | 548000 | 152 | 179 | 2 | 2 | 0.27 | 2.47 | 3.67 | 2.41 | 5.96 | 130KBD030 |
| | 210 | 64 | 64 | 2 | 2.5 | 130KBD031 | 412000 | 657000 | 153 | 185 | 2 | 2 | 0.36 | 1.87 | 2.79 | 1.83 | 8.41 | 130KBD031 |
| 140 | 210 | 53 | 53 | 2 | 2.5 | 140KBD030 | 311000 | 564000 | 159 | 188 | 2 | 2 | 0.27 | 2.47 | 3.67 | 2.41 | 6.45 | 140KBD030 |
| | 225 | 68 | 68 | 2.5 | 3 | 140KBD031 | 486000 | 807000 | 160 | 210 | 2 | 2.5 | 0.40 | 1.68 | 2.50 | 1.64 | 10.0 | 140KBD031 |
| 150 | 225 | 56 | 56 | 2.5 | 3 | 150KBD030 | 355000 | 686000 | 174 | 203 | 2 | 2.5 | 0.26 | 2.55 | 3.80 | 2.50 | 7.78 | 150KBD030 |
| | 250 | 80 | 80 | 2.5 | 3 | 150KBD031 | 593000 | 955000 | 179 | 220 | 2 | 2.5 | 0.35 | 1.95 | 2.90 | 1.91 | 15.5 | 150KBD031 |
| 160 | 240 | 60 | 60 | 2.5 | 3 | 160KBD030 | 421000 | 705000 | 184 | 217 | 2 | 2.5 | 0.24 | 2.79 | 4.15 | 2.73 | 9.22 | 160KBD030 |
| | 270 | 86 | 86 | 2.5 | 3 | 160KBD031 | 678000 | 1100000 | 193 | 237 | 2 | 2.5 | 0.35 | 1.95 | 2.90 | 1.91 | 19.8 | 160KBD031 |
| 170 | 260 | 67 | 67 | 2.5 | 3 | 170KBD030 | 521000 | 956000 | 195 | 233 | 2 | 2.5 | 0.31 | 2.21 | 3.29 | 2.16 | 12.4 | 170KBD030 |
| | 280 | 88 | 88 | 2.5 | 3 | 170KBD031 | 723000 | 1210000 | 201 | 247 | 2 | 2.5 | 0.33 | 2.03 | 3.02 | 1.98 | 21.6 | 170KBD031 |
| 180 | 280 | 74 | 74 | 2.5 | 3 | 180KBD030 | 575000 | 1050000 | 208 | 250 | 2 | 2.5 | 0.28 | 2.43 | 3.61 | 2.37 | 16.8 | 180KBD030 |
| | 300 | 96 | 96 | 3 | 4 | 180KBD031 | 860000 | 1370000 | 210 | 263 | 2.5 | 3 | 0.35 | 1.95 | 2.90 | 1.91 | 26.5 | 180KBD031 |
| 190 | 290 | 75 | 75 | 2.5 | 3 | 190KBD030 | 599000 | 1130000 | 219 | 260 | 2 | 2.5 | 0.26 | 2.55 | 3.80 | 2.50 | 17.7 | 190KBD030 |
| | 320 | 104 | 104 | 3 | 4 | 190KBD031 | 981000 | 1590000 | 224 | 280 | 2.5 | 3 | 0.35 | 1.95 | 2.90 | 1.91 | 34.0 | 190KBD031 |
| 200 | 310 | 82 | 82 | 2.5 | 3 | 200KBD030 | 728000 | 1410000 | 234 | 280 | 2 | 2.5 | 0.26 | 2.55 | 3.80 | 2.50 | 22.9 | 200KBD030 |
| | 340 | 112 | 112 | 3 | 4 | 200KBD031 | 1080000 | 1840000 | 244 | 300 | 2.5 | 3 | 0.35 | 1.95 | 2.90 | 1.91 | 41.9 | 200KBD031 |
| 220 | 340 | 90 | 90 | 3 | 4 | 220KBD030 | 804000 | 1460000 | 259 | 306 | 2.5 | 3 | 0.28 | 2.43 | 3.61 | 2.37 | 28.5 | 220KBD030 |
| | 370 | 120 | 120 | 4 | 5 | 220KBD031 | 1210000 | 2060000 | 263 | 324 | 3 | 4 | 0.35 | 1.95 | 2.90 | 1.91 | 50.8 | 220KBD031 |
| 240 | 360 | 92 | 90 | 3 | 4 | 240KBD030 | 915000 | 1790000 | 271 | 325 | 2.5 | 3 | 0.32 | 2.12 | 3.15 | 2.07 | 32.2 | 240KBD030 |
| | 400 | 128 | 128 | 4 | 5 | 240KBD031 | 1430000 | 2470000 | 286 | 354 | 3 | 4 | 0.35 | 1.95 | 2.90 | 1.91 | 65.4 | 240KBD031 |
| 260 | 400 | 104 | 104 | 4 | 5 | 260KBD030 | 1140000 | 2120000 | 302 | 360 | 3 | 4 | 0.25 | 2.74 | 4.08 | 2.68 | 48.1 | 260KBD030 |
| | 440 | 144 | 144 | 4 | 5 | 260KBD031 | 1890000 | 3440000 | 313 | 386 | 3 | 4 | 0.35 | 1.95 | 2.90 | 1.91 | 92.2 | 260KBD031 |
| 280 | 420 | 106 | 106 | 4 | 5 | 280KBD030 | 1190000 | 2470000 | 321 | 370 | 3 | 4 | 0.25 | 2.69 | 4.00 | 2.63 | 51.9 | 280KBD030 |
| 300 | 460 | 118 | 118 | 4 | 5 | 300KBD030 | 1610000 | 3150000 | 350 | 418 | 3 | 4 | 0.25 | 2.74 | 4.08 | 2.68 | 78.5 | 300KBD030 |
| | 500 | 160 | 160 | 5 | 6 | 300KBD031 | 2120000 | 4240000 | 356 | 440 | 4 | 5 | 0.35 | 1.95 | 2.90 | 1.91 | 129 | 300KBD031 |
| 320 | 480 | 121 | 121 | 4 | 5 | 320KBD030 | 1630000 | 3180000 | 368 | 434 | 3 | 4 | 0.26 | 2.55 | 3.80 | 2.50 | 77.8 | 320KBD030 |
| | 540 | 176 | 176 | 5 | 6 | 320KBD031 | 2690000 | 5280000 | 378 | 474 | 4 | 5 | 0.32 | 2.12 | 3.15 | 2.07 | 167 | 320KBD031 |
| 340 | 580 | 190 | 190 | 5 | 6 | 340KBD031 | 3290000 | 5470000 | 401 | 515 | 4 | 5 | 0.32 | 2.12 | 3.15 | 2.07 | 202 | 340KBD031 |
| 360 | 540 | 134 | 134 | 5 | 6 | 360KBD030 | 2050000 | 3910000 | 408 | 488 | 4 | 5 | 0.32 | 2.12 | 3.15 | 2.06 | 101 | 360KBD030 |
| | 600 | 192 | 192 | 5 | 6 | 360KBD031 | 3360000 | 6750000 | 419 | 528 | 4 | 5 | 0.32 | 2.12 | 3.15 | 2.06 | 228 | 360KBD031 |

# Double-row Tapered Roller Bearings - Inward

Bore Diameter: 380～500mm

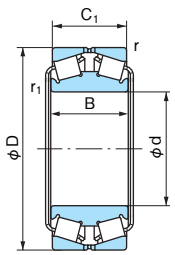


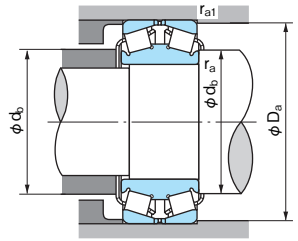


**Dynamic equivalent radial load**

Pr=XFr+YFa

| $\frac{Fa}{Fr} \leqq e$ | | $\frac{Fa}{Fr} > e$ | |
|---|---|---|---|
| X | Y | X | Y |
| 1 | $Y_1$ | 0.67 | $Y_2$ |

Values e, $Y_1$, and $Y_2$ from table.

**Static equivalent radial load**

$P_{or}=F_r+Y_0F_a$

Values $Y_0$ from table.

1N=0.102kgf

| Boundary dimensions (mm) | | | | | | Bearing No. | Basic dynamic load rating Cr (N) | Basic static load rating Cor (N) | Abutment and fillet dimensions (mm) | | | | Constant e | Axial load factor | | | Mass (kg) | Bearing No. |
|---|---|---|---|---|---|---|---|---|---|---|---|---|---|---|---|---|---|---|
| d | D | B | $C_1$ | r (min) | $r_1$ (min) | | | | $d_b$ (min) | $D_a$ (min) | $r_a$ (max) | $r_{a1}$ (max) | | $Y_1$ | $Y_2$ | $Y_0$ | | |
| 380 | 560 | 135 | 135 | 5 | 6 | **380KBD030** | 2060000 | 3790000 | 428 | 510 | 4 | 5 | 0.27 | 2.47 | 3.67 | 2.41 | 112 | **380KBD030** |
| | 620 | 194 | 194 | 5 | 6 | **380KBD031** | 3070000 | 6360000 | 445 | 545 | 4 | 5 | 0.32 | 2.12 | 3.15 | 2.07 | 234 | **380KBD031** |
| 400 | 600 | 148 | 148 | 5 | 6 | **400KBD030** | 2410000 | 4960000 | 452 | 545 | 4 | 5 | 0.33 | 2.03 | 3.02 | 1.98 | 143 | **400KBD030** |
| | 650 | 200 | 200 | 6 | 6 | **400KBD031** | 3850000 | 7810000 | 458 | 580 | 5 | 5 | 0.39 | 1.74 | 2.59 | 1.70 | 265 | **400KBD031** |
| 420 | 700 | 224 | 224 | 6 | 6 | **420KBD031** | 4710000 | 8380000 | 488 | 623 | 5 | 5 | 0.39 | 1.74 | 2.59 | 1.70 | 352 | **420KBD031** |
| 440 | 650 | 157 | 157 | 6 | 6 | **440KBD030** | 2750000 | 5500000 | 500 | 592 | 5 | 5 | 0.28 | 2.43 | 3.61 | 2.37 | 182 | **440KBD030** |
| | 720 | 226 | 226 | 6 | 6 | **440KBD031** | 4990000 | 9130000 | 506 | 642 | 5 | 5 | 0.39 | 1.74 | 2.59 | 1.70 | 367 | **440KBD031** |
| 460 | 680 | 163 | 163 | 6 | 6 | **460KBD030** | 3000000 | 5660000 | 510 | 616 | 5 | 5 | 0.39 | 1.74 | 2.59 | 1.70 | 197 | **460KBD030** |
| 480 | 700 | 165 | 165 | 6 | 6 | **480KBD030** | 3060000 | 6710000 | 531 | 625 | 5 | 5 | 0.40 | 1.68 | 2.50 | 1.64 | 215 | **480KBD030** |
| 500 | 720 | 167 | 167 | 6 | 6 | **500KBD030** | 3430000 | 7350000 | 545 | 645 | 5 | 5 | 0.39 | 1.74 | 2.59 | 1.70 | 222 | **500KBD030** |

# Four-row Tapered Roller Bearings

Tolerance / metric series ····· Page 57
/ inch series ····· Page 60

## ● Design and Features

Four-row Tapered Roller Bearings are used for the roll necks of rolling mills and are designed to provide the maximum load capacity within the limited space while allowing easy inspection and maintenance.

Pin-type cages and hollow rollers are used in some of the larger bore sizes to maximize load capacity.

## ● Recommended Fit (cylindrical bore)

Metric series ···Table 1 and 2
Inch series ·····Table 3 and 4

## ● Bearing Clearance

Cylindrical-bore, Four-row Tapered Roller Bearings used for roll neck of rolling mill have a C2 or smaller clearance. If selection of special radial clearance is required for special service conditions, contact NACHI.

Bearing clearance for Four-row Tapered roller bearings is factory-adjusted as a set and the individual parts of a set must be mounted according to the set marks.

**Table 1. Four-row Bearing Roll Neck Fits (Metric Series)** Unit: μm

| Nominal bearing bore diameter d (mm) | | Single plane mean bore diameter deviation $\Delta d_{mp}$ | | Roll neck diameter deviation | | Fit clearance | | Wear limit of roll neck (Reference) |
|---|---|---|---|---|---|---|---|---|
| Over | Incl. | High | Low | High | Low | Min | Max | |
| 80 | 120 | 0 | –20 | –120 | –150 | 100 | 150 | 300 |
| 120 | 180 | 0 | –25 | –150 | –175 | 125 | 175 | 350 |
| 180 | 250 | 0 | –30 | –175 | –200 | 145 | 200 | 400 |
| 250 | 315 | 0 | –35 | –210 | –240 | 175 | 240 | 480 |
| 315 | 400 | 0 | –40 | –240 | –300 | 200 | 300 | 600 |
| 400 | 500 | 0 | –45 | –245 | –300 | 200 | 300 | 600 |
| 500 | 630 | 0 | –50 | –250 | –300 | 200 | 300 | 600 |

**Table 2. Four-row Bearing Chock Fits (Metric Series)** Unit: μm

| Nominal bearing outside diameter D (mm) | | Single plane mean outside diameter deviation $\Delta D_{mp}$ | | Chock inside diameter deviation | | Fit clearance | | Wear limit of chock inside diameter (Reference) |
|---|---|---|---|---|---|---|---|---|
| Over | Incl. | High | Low | High | Low | Min | Max | |
| 120 | 150 | 0 | –20 | + 60 | +25 | 25 | 80 | 160 |
| 150 | 180 | 0 | –25 | +125 | +50 | 50 | 150 | 300 |
| 180 | 250 | 0 | –30 | +120 | +50 | 50 | 150 | 300 |
| 250 | 315 | 0 | –35 | +115 | +50 | 50 | 150 | 300 |
| 315 | 400 | 0 | –40 | +110 | +50 | 50 | 150 | 300 |
| 400 | 500 | 0 | –45 | +105 | +50 | 50 | 150 | 300 |
| 500 | 630 | 0 | –50 | +100 | +50 | 50 | 150 | 300 |
| 630 | 800 | 0 | –75 | +150 | +75 | 75 | 225 | 450 |

**Table 3. Four-row Bearing Roll Neck Fits (Inch Series)** Unit: μm

| Nominal bearing bore diameter d (mm) | | | | Single plane mean bore diameter deviation $\Delta d_s$ | | Roll neck diameter deviation | | Fit clearance | | Wear limit of roll neck (Reference) |
|---|---|---|---|---|---|---|---|---|---|---|
| Over | | Incl. | | | | | | | | |
| (mm) | (inch) | (mm) | (inch) | High | Low | High | Low | Min | Max | |
| 127.000 | 5.0000 | 152.400 | 6.0000 | +25 | 0 | –120 | –150 | 120 | 175 | 300 |
| 152.400 | 6.0000 | 203.200 | 8.0000 | +25 | 0 | –150 | –175 | 150 | 200 | 400 |
| 203.200 | 8.0000 | 304.800 | 12.0000 | +25 | 0 | –175 | –200 | 175 | 225 | 450 |
| 304.800 | 12.0000 | 609.600 | 24.0000 | +51 | 0 | –200 | –250 | 200 | 301 | 600 |
| 609.600 | 24.0000 | 914.400 | 36.0000 | +76 | 0 | –250 | –325 | 250 | 401 | 800 |

**Table 4. Four-row Bearing Chock Fits (Inch Series)** Unit: μm

| Nominal bearing outside diameter D (mm) | | | | Single plane mean outside diameter deviation $\Delta D_s$ | | Chock inside diameter deviation | | Fit clearance | | Wear limit of chock inside diameter (Reference) |
|---|---|---|---|---|---|---|---|---|---|---|
| Over | | Incl. | | | | | | | | |
| (mm) | (inch) | (mm) | (inch) | High | Low | High | Low | Min | Max | |
| — | — | 304.800 | 12.0000 | +25 | 0 | + 75 | + 50 | 25 | 75 | 300 |
| 304.800 | 12.0000 | 609.600 | 24.0000 | +51 | 0 | +150 | +100 | 49 | 150 | 300 |
| 609.600 | 24.0000 | 914.400 | 36.0000 | +76 | 0 | +225 | +150 | 74 | 225 | 450 |

# Four-row Tapered Roller Bearings

## Metric Series

Bore Diameter: 100～500mm

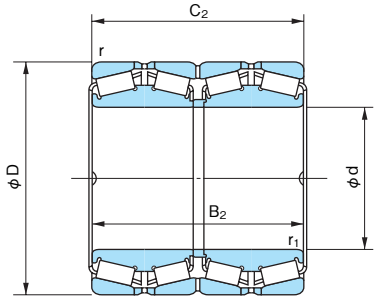


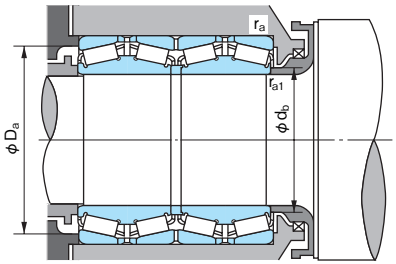


**■Dynamic equivalent radial load**

Pr=XFr+YFa

| $\frac{Fa}{Fr} \leqq e$ | | $\frac{Fa}{Fr} > e$ | |
|---|---|---|---|
| X | Y | X | Y |
| 1 | $Y_1$ | 0.67 | $Y_2$ |

Values of $Y_1$, $Y_2$ and e from table.

**■Static equivalent radial load**

$P_{or}=F_r+Y_0F_a$

Values $Y_0$ from table.

1N=0.102kgf

| Boundary dimensions (mm) d (mm) | d (inch) | D (mm) | D (inch) | B2 (mm) | B2 (inch) | C2 (mm) | C2 (inch) | Bearing No. | Basic dynamic load rating Cr (N) | Basic static load rating Cor (N) | | r (min) | r1 (min) | Abutment and fillet dimensions (mm) db | Da | ra (max) | ra1 (max) | Constant e | Axial load factor Y1 | Y2 | Y0 | Mass (kg) Reference | Bearing No. |
|---|---|---|---|---|---|---|---|---|---|---|---|---|---|---|---|---|---|---|---|---|---|---|---|
| **100** | **3.9370** | 140 | 5.5118 | 104 | 4.0945 | 104 | 4.0945 | **100KBV039** | 300000 | 725000 | | 2 | 2 | 108 | 130 | 2 | 2 | 0.32 | 2.12 | 3.15 | 2.07 | 5.0 | **100KBV039** |
| **110** | **4.3307** | 155 | 6.1023 | 114 | 4.4882 | 114 | 4.4882 | **110KBV039** | 365000 | 790000 | | 2.5 | 2.5 | 120 | 145 | 2 | 2 | 0.40 | 1.68 | 2.50 | 1.64 | 6.4 | **110KBV039** |
| **120** | **4.7244** | 170 | 6.6929 | 124 | 4.8819 | 124 | 4.8819 | **120KBV039** | 435000 | 910000 | | 2.5 | 2.5 | 130 | 160 | 2 | 2 | 0.32 | 2.12 | 3.15 | 2.07 | 8.5 | **120KBV039** |
| **130** | **5.1181** | 184 | 7.2441 | 134 | 5.2756 | 134 | 5.2756 | **130KBV039** | 555000 | 1330000 | | 2.5 | 2.5 | 140 | 174 | 2 | 2 | 0.32 | 2.12 | 3.15 | 2.07 | 12.3 | **130KBV039** |
| **140** | **5.5118** | 198 | 7.7952 | 144 | 5.6693 | 144 | 5.6693 | **140KBV039** | 580000 | 1330000 | | 2.5 | 2.5 | 153 | 184 | 2 | 2 | 0.29 | 2.32 | 3.45 | 2.26 | 13.3 | **140KBV039** |
| **150** | **5.9055** | 212 | 8.3465 | 155 | 6.1024 | 155 | 6.1024 | **150KBV039** | 680000 | 1550000 | | 2.5 | 2.5 | 161 | 200 | 2 | 2 | 0.40 | 1.68 | 2.50 | 1.64 | 15.0 | **150KBV039** |
| **160** | **6.2992** | 226 | 8.8976 | 165 | 6.4961 | 165 | 6.4961 | **160KBV039** | 725000 | 1950000 | | 2.5 | 2.5 | 173 | 208 | 2 | 2 | 0.35 | 1.95 | 2.90 | 1.91 | 20.2 | **160KBV039** |
| **170** | **6.6929** | 240 | 9.4488 | 175 | 6.8898 | 175 | 6.8898 | **170KBV039** | 915000 | 2220000 | | 2.5 | 2.5 | 183 | 225 | 2 | 2 | 0.32 | 2.12 | 3.15 | 2.07 | 23.7 | **170KBV039** |
| **180** | **7.0866** | 254 | 10.0000 | 185 | 7.2835 | 185 | 7.2835 | **180KBV039** | 980000 | 2410000 | | 2.5 | 2.5 | 193 | 235 | 2 | 2 | 0.40 | 1.68 | 2.50 | 1.64 | 28.0 | **180KBV039** |
| **190** | **7.4803** | 268 | 10.5512 | 196 | 7.7165 | 196 | 7.7165 | **190KBV039** | 1030000 | 2760000 | | 2.5 | 2.5 | 204 | 245 | 2 | 2 | 0.47 | 1.43 | 2.12 | 1.40 | 33.0 | **190KBV039** |
| **200** | **7.8740** | 282 | 11.1024 | 206 | 8.1102 | 206 | 8.1102 | **200KBV039** | 1290000 | 3400000 | | 2.5 | 2.5 | 215 | 263 | 2 | 2 | 0.40 | 1.68 | 2.50 | 1.64 | 49.2 | **200KBV039** |
| **220** | **8.6614** | 310 | 12.2047 | 226 | 8.8976 | 226 | 8.8976 | **220KBV039** | 1500000 | 4000000 | | 3 | 3 | 234 | 296 | 2.5 | 2.5 | 0.35 | 1.95 | 2.90 | 1.91 | 52.7 | **220KBV039** |
| **240** | **9.4488** | 338 | 13.3071 | 248 | 9.7638 | 248 | 9.7638 | **240KBV039** | 1740000 | 4450000 | | 3 | 3 | 260 | 310 | 2.5 | 2.5 | 0.29 | 2.32 | 3.45 | 2.26 | 68.3 | **240KBV039** |
| **260** | **10.2362** | 368 | 14.4882 | 268 | 10.5512 | 268 | 10.5512 | **260KBV039** | 2010000 | 5750000 | | 4 | 4 | 282 | 348 | 3 | 3 | 0.33 | 2.03 | 3.02 | 1.98 | 90.0 | **260KBV039** |
| **280** | **11.0236** | 395 | 15.5512 | 288 | 11.3386 | 288 | 11.3386 | **280KBV039** | 2540000 | 7050000 | | 4 | 4 | 300 | 374 | 3 | 3 | 0.33 | 2.03 | 3.02 | 1.98 | 108 | **280KBV039** |
| **300** | **11.8110** | 424 | 16.6929 | 310 | 12.2047 | 310 | 12.2047 | **300KBV039** | 2600000 | 6800000 | | 4 | 4 | 320 | 394 | 3 | 3 | 0.35 | 1.95 | 2.90 | 1.91 | 137 | **300KBV039** |
| **320** | **12.5984** | 460 | 18.1102 | 338 | 13.3071 | 338 | 13.3071 | **320KBV039** | 3100000 | 8800000 | | 4 | 4 | 340 | 428 | 3 | 3 | 0.35 | 1.95 | 2.90 | 1.91 | 183 | **320KBV039** |
| **340** | **13.3858** | 480 | 18.8976 | 350 | 13.7795 | 350 | 13.7795 | **340KBV039** | 3400000 | 10100000 | | 5 | 5 | 362 | 458 | 4 | 4 | 0.29 | 2.32 | 3.45 | 2.26 | 198 | **340KBV039** |
| **360** | **14.1732** | 508 | 20.0000 | 370 | 14.5669 | 370 | 14.5669 | **360KBV039** | 4050000 | 11900000 | | 5 | 5 | 382 | 486 | 4 | 4 | 0.40 | 1.68 | 2.50 | 1.64 | 233 | **360KBV039** |
| **380** | **14.9606** | 536 | 21.1024 | 390 | 15.3543 | 390 | 15.3543 | **380KBV039** | 4450000 | 13600000 | | 5 | 5 | 408 | 500 | 4 | 4 | 0.40 | 1.68 | 2.50 | 1.64 | 271 | **380KBV039** |
| **400** | **15.7480** | 564 | 22.2047 | 412 | 16.2205 | 412 | 16.2205 | **400KBV039** | 4700000 | 14000000 | | 5 | 5 | 422 | 542 | 4 | 4 | 0.36 | 1.87 | 2.79 | 1.83 | 317 | **400KBV039** |
| **420** | **16.5354** | 592 | 23.3071 | 432 | 17.0079 | 432 | 17.0079 | **420KBV039** | 4900000 | 14000000 | | 5 | 5 | 450 | 556 | 4 | 4 | 0.36 | 1.87 | 2.79 | 1.83 | 366 | **420KBV039** |
| **440** | **17.3228** | 620 | 24.4094 | 454 | 17.8740 | 454 | 17.8740 | **440KBV039** | 6500000 | 19900000 | | 6 | 6 | 474 | 574 | 5 | 5 | 0.33 | 2.03 | 3.02 | 1.98 | 422 | **440KBV039** |
| **460** | **18.1102** | 650 | 25.5906 | 474 | 18.6614 | 474 | 18.6614 | **460KBV039** | 6800000 | 19600000 | | 6 | 6 | 488 | 622 | 5 | 5 | 0.33 | 2.03 | 3.02 | 1.98 | 487 | **460KBV039** |
| **480** | **18.8976** | 678 | 26.6929 | 494 | 19.4488 | 494 | 19.4488 | **480KBV039** | 7350000 | 22900000 | | 6 | 6 | 515 | 637 | 5 | 5 | 0.33 | 2.02 | 3.01 | 1.97 | 552 | **480KBV039** |
| **500** | **19.6850** | 705 | 27.7559 | 515 | 20.2756 | 515 | 20.2756 | **500KBV039** | 7650000 | 24000000 | | 6 | 6 | 528 | 677 | 5 | 5 | 0.33 | 2.03 | 3.02 | 1.98 | 650 | **500KBV039** |

Remarks: 1. Regarding four-row tapered roller bearings except above-listed, please contact NACHI.
2. When using four-row tapered roller bearings, please contact NACHI.

# Four-row Tapered Roller Bearings

## Inch Series

Bore Diameter: 136.525～609.600mm

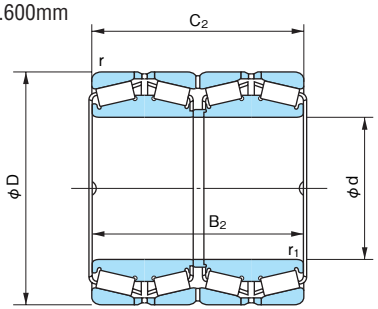


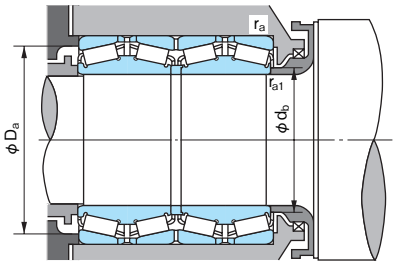


**Dynamic equivalent radial load**

Pr=XFr+YFa

| $\frac{Fa}{Fr} \leqq e$ | | $\frac{Fa}{Fr} > e$ | |
|---|---|---|---|
| X | Y | X | Y |
| 1 | $Y_1$ | 0.67 | $Y_2$ |

Values of $Y_1$, $Y_2$ and e from table.

**Static equivalent radial load**

$P_{or}=F_r+Y_0F_a$

Values $Y_0$ from table.

1N=0.102kgf

| Boundary dimensions (mm) d (mm) | d (inch) | D (mm) | D (inch) | B2 (mm) | B2 (inch) | C2 (mm) | C2 (inch) | Bearing No. | Basic dynamic load rating Cr (N) | Basic static load rating Cor (N) | | r (min) | r1 (min) | Abutment and fillet dimensions (mm) db | Da | ra (max) | ra1 (max) | Constant e | Axial load factor Y1 | Y2 | Y0 | Mass (kg) Reference | Reference Bearing No. | Bearing No. |
|---|---|---|---|---|---|---|---|---|---|---|---|---|---|---|---|---|---|---|---|---|---|---|---|---|
| 136.525 | 5.3750 | 190.500 | 7.5000 | 161.925 | 6.3750 | 161.925 | 6.3750 | B26417 | 715000 | 1900000 | | 3.3 | 1.6 | 147 | 183 | 1.5 | 3.2 | 0.32 | 2.10 | 3.13 | 2.06 | 14.9 | 48393D/48320/48320D | B26417 |
| 139.700 | 5.5000 | 200.025 | 7.8750 | 157.165 | 6.1876 | 160.340 | 6.3126 | B28906 | 720000 | 2020000 | | 3.3 | 0.8 | 147 | 182 | 0.8 | 3.2 | 0.34 | 2.01 | 2.99 | 1.97 | 17.7 | 48680D/48620/48620D | B28906 |
| 152.400 | 6.0000 | 222.250 | 8.7500 | 174.625 | 6.8750 | 174.625 | 6.8750 | C21017 | 910000 | 2070000 | | 1.6 | 1.6 | 164 | 210 | 1.5 | 1.5 | 0.33 | 2.02 | 3.01 | 1.98 | 22.7 | M231649D/M231610/M231610D | C21017 |
| 165.100 | 6.5000 | 225.425 | 8.8750 | 168.275 | 6.6250 | 168.275 | 6.6250 | B25971 | 755000 | 2270000 | | 3.2 | 0.8 | 175 | 207 | 0.8 | 3.2 | 0.38 | 1.76 | 2.63 | 1.72 | 20.2 | 46791D/46720/46721D | B25971 |
| 177.800 | 7.0000 | 247.650 | 9.7500 | 192.088 | 7.5625 | 192.088 | 7.5625 | C20498 | 990000 | 2720000 | | 3.3 | 1.5 | 190 | 229 | 1.5 | 3.2 | 0.44 | 1.54 | 2.29 | 1.50 | 29.0 | 67791D/67720/67721D | C20498 |
| 190.500 | 7.5000 | 266.700 | 10.5000 | 187.325 | 7.3750 | 188.912 | 7.4375 | C19114 | 1030000 | 2900000 | | 3.3 | 1.5 | 204 | 246 | 1.5 | 3.2 | 0.47 | 1.43 | 2.12 | 1.40 | 37.7 | 67885D/67820/67820D | C19114 |
| 244.475 | 9.6250 | 327.025 | 12.8750 | 193.675 | 7.6250 | 193.675 | 7.6250 | C27913 | 1370000 | 3550000 | | 3.3 | 1.5 | 258 | 309 | 1.5 | 3.2 | 0.32 | 2.10 | 3.13 | 2.06 | 43.0 | LM247748D/LM247710/LM247710D | C27913 |
| 254.000 | 10.0000 | 358.775 | 14.1250 | 269.875 | 10.6250 | 269.875 | 10.6250 | C27916 | 2120000 | 5800000 | | 3.4 | 1.6 | 275 | 335 | 1.5 | 3.2 | 0.33 | 2.02 | 3.01 | 1.98 | 85.5 | M249748D/M249710/M249710D | C27916 |
| 260.350 | 10.2500 | 422.275 | 16.6250 | 314.325 | 12.3750 | 317.500 | 12.5000 | C22144 | 2980000 | 7150000 | | 3.3 | 6.4 | 297 | 404 | 6.4 | 3.2 | 0.33 | 2.03 | 3.02 | 1.98 | 178 | HM252348D/HM252310/HM252310D | C22144 |
| 266.700 | 10.5000 | 355.600 | 14.0000 | 230.188 | 9.0625 | 228.600 | 9.0000 | C19619 | 1490000 | 4700000 | | 3.2 | 1.6 | 277 | 337 | 1.5 | 3.2 | 0.37 | 1.80 | 2.69 | 1.76 | 65.6 | 76590D/76520/76520D | C19619 |
| 266.700 | 10.5000 | 355.600 | 14.0000 | 230.188 | 9.0625 | 228.600 | 9.0000 | C29167 | 1790000 | 5200000 | | 3.3 | 1.5 | 280 | 335 | 1.5 | 3.2 | 0.31 | 2.15 | 3.20 | 2.10 | 64.4 | LM451349D/LM451310/LM451310D | C29167 |
| 279.400 | 11.0000 | 393.700 | 15.5000 | 269.875 | 10.6250 | 269.875 | 10.6250 | C19116 | 1920000 | 5300000 | | 6.4 | 1.5 | 297 | 357 | 1.5 | 6.4 | 0.40 | 1.68 | 2.50 | 1.64 | 103 | EE135111D/135155/135156XD | C19116 |
| 285.750 | 11.2500 | 380.898 | 14.9960 | 244.475 | 9.6250 | 244.475 | 9.6250 | C27768 | 1870000 | 6300000 | | 3.3 | 1.5 | 296 | 362 | 1.5 | 3.2 | 0.43 | 1.57 | 2.34 | 1.53 | 84.3 | LM654648D/LM654610/LM654610D | C27768 |
| 304.800 | 12.0000 | 419.100 | 16.5000 | 269.875 | 10.6250 | 269.875 | 10.6250 | C24618 | 2460000 | 7050000 | | 6.4 | 1.5 | 320 | 383 | 1.5 | 6.4 | 0.33 | 2.03 | 3.02 | 1.98 | 110 | M257149D/M257110/M257110D | C24618 |
| 333.375 | 13.1250 | 469.900 | 18.5000 | 342.900 | 13.5000 | 342.900 | 13.5000 | C21093 | 3450000 | 9900000 | | 3.2 | 3.2 | 352 | 451 | 3.2 | 3.2 | 0.33 | 2.02 | 3.01 | 1.97 | 193 | HM261049D/HM261010/HM261010D | C21093 |
| 343.052 | 13.5060 | 457.098 | 17.9960 | 254.000 | 10.0000 | 254.000 | 10.0000 | C29794 | 2480000 | 7150000 | | 3.3 | 1.5 | 356 | 428 | 1.5 | 3.2 | 0.45 | 1.49 | 2.21 | 1.45 | 113 | LM761649D/LM761610/LM761610D | C29794 |
| 346.075 | 13.6250 | 488.950 | 19.2500 | 358.775 | 14.1250 | 358.775 | 14.1250 | C21179 | 3950000 | 11600000 | | 3.3 | 3.3 | 365 | 452 | 3.2 | 3.2 | 0.34 | 2.01 | 2.99 | 1.97 | 208 | HM262749D/HM262710/HM262710D | C21179 |
| 384.175 | 15.1250 | 546.100 | 21.5000 | 400.050 | 15.7500 | 400.050 | 15.7500 | E17237 | 5750000 | 16600000 | | 6.4 | 3.3 | 414 | 507 | 3.2 | 6.4 | 0.33 | 2.02 | 3.01 | 1.98 | 308 | HM266449D/HM266410/HM266410D | E17237 |
| 406.400 | 16.0000 | 546.100 | 21.5000 | 288.925 | 11.3750 | 288.925 | 11.3750 | E21147 | 3050000 | 8500000 | | 6.4 | 1.5 | 427 | 510 | 1.5 | 6.4 | 0.48 | 1.42 | 2.11 | 1.38 | 186 | LM767749D/LM767710/LM767710D | E21147 |
| 431.800 | 17.0000 | 571.500 | 22.5000 | 279.400 | 11.0000 | 279.400 | 11.0000 | E12751 | 2990000 | 9550000 | | 3.3 | 1.5 | 452 | 540 | 1.5 | 3.2 | 0.39 | 1.75 | 2.60 | 1.71 | 191 | LM869449D/LM869410/LM869410D | E12751 |
| 447.675 | 17.6250 | 635.000 | 25.0000 | 463.550 | 18.2500 | 463.550 | 18.2500 | E17442 | 6700000 | 20500000 | | 6.4 | 3.3 | 466 | 599 | 3.2 | 6.4 | 0.33 | 2.03 | 3.02 | 1.98 | 491 | M270749D/M270710/M270710D | E17442 |
| 457.200 | 18.0000 | 596.900 | 23.5000 | 276.225 | 10.8750 | 279.400 | 11.0000 | E22321 | 2950000 | 9900000 | | 3.3 | 1.5 | 478 | 567 | 1.5 | 3.2 | 0.47 | 1.43 | 2.12 | 1.39 | 200 | L770847D/L770810/L770810D | E22321 |
| 479.425 | 18.8750 | 679.450 | 26.7500 | 495.300 | 19.5000 | 495.300 | 19.5000 | E17717 | 6450000 | 18900000 | | 6.4 | 3.2 | 510 | 633 | 3.2 | 6.4 | 0.33 | 2.02 | 3.01 | 1.97 | 590 | M272749D/M272710/M272710XD | E17717 |
| 482.600 | 19.0000 | 615.950 | 24.2500 | 330.200 | 13.0000 | 330.200 | 13.0000 | E24206 | 3600000 | 11900000 | | 6.4 | 3.4 | 501 | 579 | 3.2 | 6.4 | 0.33 | 2.03 | 3.02 | 1.98 | 251 | LM272249D/LM272210/LM272210D | E24206 |
| 482.600 | 19.0000 | 647.700 | 25.5000 | 417.512 | 16.4375 | 417.512 | 16.4375 | E12372 | 5950000 | 14800000 | | 6.4 | 3.3 | 505 | 611 | 3.2 | 6.4 | 0.33 | 2.03 | 3.02 | 1.98 | 432 | M272647D/M272610/M272610D | E12372 |
| 488.950 | 19.2500 | 660.400 | 26.0000 | 365.125 | 14.3750 | 361.950 | 14.2500 | E12371 | 5250000 | 19900000 | | 6.4 | 8.0 | 525 | 624 | 7.8 | 6.4 | 0.31 | 2.20 | 3.27 | 2.15 | 347 | EE640193D/640260/640261D | E12371 |
| 571.500 | 22.5000 | 812.800 | 32.0000 | 593.725 | 23.3750 | 593.725 | 23.3750 | E23120 | 10300000 | 34000000 | | 6.4 | 3.3 | 608 | 776 | 3.2 | 6.4 | 0.33 | 2.02 | 3.01 | 1.98 | 1020 | M278749D/M278710/M278710D | E23120 |
| 609.600 | 24.0000 | 787.400 | 31.0000 | 361.950 | 14.2500 | 361.950 | 14.2500 | E11996 | 4800000 | 17300000 | | 6.4 | 3.3 | 637 | 747 | 3.2 | 6.4 | 0.37 | 1.82 | 2.70 | 1.78 | 460 | EE649241D/649310/649311D | E11996 |

Remarks: 1. Regarding four-row tapered roller bearings except above-listed, please contact NACHI.
2. When using four-row tapered roller bearings, please contact NACHI.

# Spherical Roller Bearings

Tolerance ····· Page 52
Internal clearance ····· Page 64
Heat-stabilized treatment ····· Page 22
Adapter sleeves ····· Page 592
Withdrawal sleeves ····· Page 592

## ● Design and configurations

Spherical Roller Bearings are particularly suitable for applications where misalignment can arise from error in mounting or from shaft deflection. NACHI Spherical Roller Bearings are manufactured in a number of design and material configurations depending on the type of application and size of the bearing.
See Table 1 for the roller, the guide ring and cage design for NACHI Spherical Roller Bearings.
They can sustain radial and axial loads.

**Table 1. Design and configurations**

| Series \ Type | EX | EX1 | E | E2 | E | AEX | AX | A2X | AX |
|---|---|---|---|---|---|---|---|---|---|
| 239 | | | | | 20, 26, 44～/1060 | | 28～40 | | |
| 230 | | | 20～36 | | 38～/1000 | | 20～36 | 38～48 | |
| 240 | | 24～36 | | | 38～/600, /670, /800 | | | | 24～36 |
| 231 | | 20～34 | | | 36～/800 | | 20～34 | 36～48 | |
| 241 | | 22～32 | | | 36～/500 | | | | 22～34 |
| 222 | 05～30 | | 32 | 32 | 34～68 | 05～30 | | 32 | |
| 232 | | 18, 20～30 | 16, 17, 19 | | 32～/600 | | 20～30 | 32～40 | |
| 213 | | 11～22 | 04～10, 24 | | | | 06～22 | | |
| 223 | 08～26 | | | | 28～60 | 07～26 | | 28, 30 | |
| Cross section | | | | 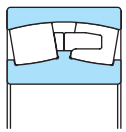 | | 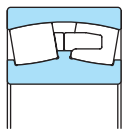 | | | 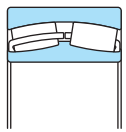 |
| Roller | Symmetric | | | Symmetric | | Nonsymmetric | | | Nonsymmetric |
| Center guide | Floating ring | | | Inner ring rib | | Inner ring rib | | | Inner ring rib |
| Cage | Pressed steel | | | Machined high strength brass | | Machined high strength brass | | | Pressed high strength brass |

## ● Attention

(1) For high axial load applications, the axial load Fa must not exceed 0.6 of the radial load Fr. If the axial load exceeds 0.6 Fr, contact NACHI engineers for design assistance.

(2) For applications where oscillating loads (such as shaker screen applications) or high speed is involved, contact NACHI for design assistance.

(3) In very lightly loaded or no load conditions, sliding motion can occur which could damage the bearing.
To prevent this, bearings must be subjected to a load greater than 0.02 Cr (basic dynamic load rating).

(4) The material coefficient number of the bearing is taken into consideration for the dynamic load rating.
* This only applies to spherical roller bearing.

## ● Lubrication Holes and Groove

The outer ring of Spherical Roller Bearings are often made with lubrication holes and a groove for feeding lubricant. The outer ring may also be configured with oil holes only depending on fitting, mounting, or service conditions.
Table 2 shows the symbols for lubrication holes and grooves.
Hole diameter, groove width and hole count are according to the dimensions table.
Improved heat treatment technology allows for operation at 200˚C without change in dimensions.

**Table 2. Lubrication holes and groove**

| Modification to outer ring | Suffix | Part No. Example |
|---|---|---|
| Lubrication holes and groove | W33 | 22330E W33 |
| Lubrication holes | W20 | 22330E W20 |

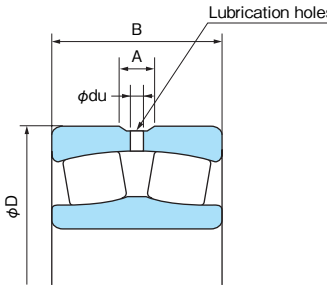

Lubrication holes and groove

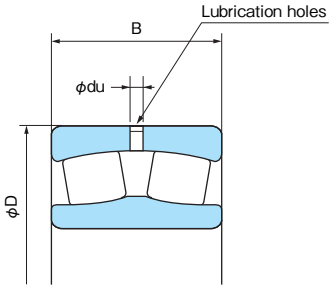

Lubrication holes

## ● Misalignment

Maximum permissible misalignment angle is about 2° under general service conditions.
But its angle will vary with the series, service condition and surrounding structure.
As rotational speed increases, misaligned bearings will tend to generate more noise.
Due to noise constraints, the practical maximum misalignment in a bearing may be considerably less than the maximum permissible misalignment.

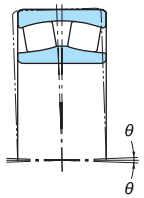






## ● Mounting bearings with tapered bore

Mounting bearings with a tapered bore requires some experience and technique. Bearings with tapered bore are always mounted with an interference fit on the shaft.
To measure the amount of interference fit on the shaft, the axial displacement of the inner ring or the reduction of radial internal clearance due to the interference fit can be used. Generally, the measurement of reduction in radial internal clearance is a more reliable method than measurement of the axial displacement of the inner ring.

Unit: mm

| Nominal bore diameter d | | Radial clearance reduction | | Axial displacement (1) Taper 1 : 12 | | Axial displacement (1) Taper 1 : 30 | | Necessary minimum internal clearance after mounting (2) (for initial clearance range) | | |
|---|---|---|---|---|---|---|---|---|---|---|
| Over | Incl. | Max | Min | Min | Max | Min | Max | Normal | C3 | C4 |
| 24 | 30 | 0.015 | 0.020 | 0.3 | 0.35 | — | — | 0.015 | 0.020 | 0.035 |
| 30 | 40 | 0.020 | 0.025 | 0.35 | 0.4 | — | — | 0.015 | 0.025 | 0.040 |
| 40 | 50 | 0.025 | 0.030 | 0.34 | 0.45 | — | — | 0.020 | 0.030 | 0.050 |
| 50 | 65 | 0.030 | 0.040 | 0.45 | 0.6 | — | — | 0.025 | 0.035 | 0.055 |
| 65 | 80 | 0.040 | 0.050 | 0.6 | 0.75 | — | — | 0.025 | 0.040 | 0.070 |
| 80 | 100 | 0.045 | 0.060 | 0.7 | 0.9 | 1.7 | 2.2 | 0.035 | 0.050 | 0.080 |
| 100 | 120 | 0.050 | 0.070 | 0.75 | 1.1 | 1.9 | 2.7 | 0.050 | 0.065 | 0.100 |
| 120 | 140 | 0.065 | 0.090 | 1.1 | 1.4 | 2.7 | 3.5 | 0.055 | 0.080 | 0.110 |
| 140 | 160 | 0.075 | 0.100 | 1.2 | 1.6 | 3.0 | 4.0 | 0.055 | 0.090 | 0.130 |
| 160 | 180 | 0.080 | 0.110 | 1.3 | 1.7 | 3.2 | 4.2 | 0.060 | 0.100 | 0.150 |
| 180 | 200 | 0.090 | 0.130 | 1.4 | 2.0 | 3.5 | 5.0 | 0.070 | 0.100 | 0.160 |
| 200 | 225 | 0.100 | 0.140 | 1.6 | 2.2 | 4.0 | 5.5 | 0.080 | 0.120 | 0.180 |
| 225 | 250 | 0.110 | 0.150 | 1.7 | 2.4 | 4.2 | 6.0 | 0.090 | 0.130 | 0.200 |
| 250 | 280 | 0.120 | 0.170 | 1.9 | 2.7 | 4.7 | 6.7 | 0.100 | 0.140 | 0.220 |
| 280 | 315 | 0.130 | 0.190 | 2.0 | 3.0 | 5.0 | 7.5 | 0.110 | 0.150 | 0.240 |
| 315 | 355 | 0.150 | 0.210 | 2.4 | 3.3 | 6.0 | 8.2 | 0.120 | 0.170 | 0.260 |
| 355 | 400 | 0.170 | 0.230 | 2.6 | 3.6 | 6.5 | 9.0 | 0.130 | 0.190 | 0.290 |
| 400 | 450 | 0.200 | 0.260 | 3.1 | 4.0 | 7.7 | 10 | 0.130 | 0.200 | 0.310 |
| 450 | 500 | 0.210 | 0.280 | 3.3 | 4.4 | 8.2 | 11 | 0.160 | 0.230 | 0.350 |
| 500 | 560 | 0.240 | 0.320 | 3.7 | 5.0 | 9.2 | 12.5 | 0.170 | 0.250 | 0.360 |
| 560 | 630 | 0.260 | 0.350 | 4.0 | 5.4 | 10 | 13.5 | 0.200 | 0.290 | 0.410 |
| 630 | 710 | 0.300 | 0.400 | 4.6 | 6.2 | 11.5 | 15.5 | 0.210 | 0.310 | 0.450 |
| 710 | 800 | 0.340 | 0.450 | 5.3 | 7.0 | 13.3 | 17.5 | 0.230 | 0.350 | 0.510 |
| 800 | 900 | 0.370 | 0.500 | 5.7 | 7.8 | 14.3 | 19.5 | 0.270 | 0.390 | 0.570 |
| 900 | 1000 | 0.410 | 0.550 | 6.3 | 8.5 | 15.8 | 21 | 0.300 | 0.430 | 0.640 |
| 1000 | 1120 | 0.450 | 0.600 | 6.8 | 9.0 | 17 | 23 | 0.320 | 0.480 | 0.700 |
| 1120 | 1250 | 0.490 | 0.650 | 7.4 | 9.8 | 18.5 | 25 | 0.340 | 0.540 | 0.770 |

Notes: (1) The values are applied for mounting on solid shaft. In case of hollow shaft, larger axial displacement should be applied.
(2) In following cases, please make sure radial internal clearance after mounting. - Initial radial clearance is less than (bore diameter deviation) × 0.5 - Temperature difference exists between inner ring and outer ring under operation. Internal clearance after mounting must be over these values.

# Spherical Roller Bearings

Bore Diameter: 20～50mm

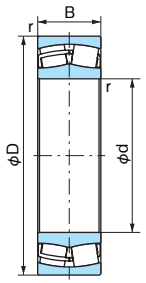


Cylindrical bore

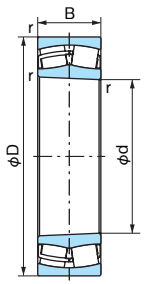


Tapered bore

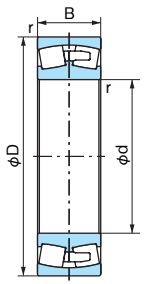


With machined brass cage

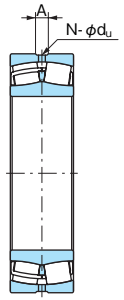


With oil holes / oil groove (W33)

1N=0.102kgf

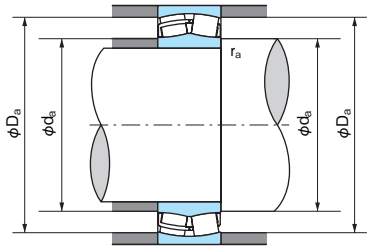


**■Dynamic equivalent radial load**

Pr=XFr+YFa

| $\frac{Fa}{Fr} \leqq e$ | | $\frac{Fa}{Fr} > e$ | |
|---|---|---|---|
| X | Y | X | Y |
| 1 | $Y_1$ | 0.67 | $Y_2$ |

Values of $Y_1$, $Y_2$ and e from table.

**■Static equivalent radial load**

$P_{or}=F_r+Y_0F_a$

Values $Y_0$ from table.

| Boundary dimensions (mm) | | | | Bearing No. | | Basic dynamic load rating Cr (N) | Basic static load rating Cor (N) | Limiting speed (min-1) | | Dimensions of lubrication holes and grooves | | | Abutment and fillet dimensions (mm) | | | Constant e | Axial load factor | | | Mass (kg) Cylindrical bore (Reference) | Bearing No. | |
|---|---|---|---|---|---|---|---|---|---|---|---|---|---|---|---|---|---|---|---|---|---|---|
| d | D | B | r (min) | Cylindrical bore | Tapered bore | | | Grease lubrication | Oil lubrication | Hole diameter du | Groove width A | Hole count N | da (min) | Da (max) | ra (max) | | $Y_1$ | $Y_2$ | $Y_0$ | | Cylindrical bore | Tapered bore |
| 20 | 52 | 15 | 1.1 | 21304E | 21304EK | 47000 | 33500 | 11,000 | 14,000 | 3 | 6 | 4 | 27.0 | 45.0 | 1.0 | 0.31 | 2.20 | 3.27 | 2.15 | 0.18 | 21304E | 21304EK |
| 25 | 52 | 18 | 1 | 22205EX | 22205EXK | 63000 | 48000 | 10,500 | 13,000 | 3 | 5 | 4 | 30.5 | 46.5 | 1.0 | 0.35 | 1.91 | 2.85 | 1.87 | 0.19 | 22205EX | 22205EXK |
| | 52 | 18 | 1 | 22205AEX | 22205AEXK | 48500 | 34500 | 13,300 | 16,500 | 3 | 5 | 4 | 30.5 | 46.5 | 1.0 | 0.43 | 1.57 | 2.33 | 1.53 | 0.18 | 22205AEX | 22205AEXK |
| | 62 | 17 | 1.1 | 21305E | 21305EK | 64000 | 47500 | 9,000 | 11,500 | 6 | 6 | 4 | 32.0 | 53.0 | 1.0 | 0.28 | 2.39 | 3.56 | 2.34 | 0.29 | 21305E | 21305EK |
| 30 | 62 | 20 | 1 | 22206EX | 22206EXK | 84500 | 65000 | 8,500 | 11,000 | 3 | 5 | 4 | 35.5 | 56.5 | 1.0 | 0.33 | 2.04 | 3.04 | 2.00 | 0.30 | 22206EX | 22206EXK |
| | 62 | 20 | 1 | 22206AEX | 22206AEXK | 68000 | 48500 | 11,200 | 14,400 | 3 | 5 | 4 | 35.5 | 56.5 | 1.0 | 0.40 | 1.70 | 2.53 | 1.66 | 0.29 | 22206AEX | 22206AEXK |
| | 72 | 19 | 1.1 | 21306E | 21306EK | 83000 | 62500 | 8,000 | 9,500 | 3 | 5 | 4 | 38.0 | 65.0 | 1.0 | 0.27 | 2.49 | 3.71 | 2.43 | 0.43 | 21306E | 21306EK |
| | 72 | 19 | 1.1 | 21306AX | 21306AXK | 73000 | 50900 | 9,700 | 12,700 | 3 | 5 | 4 | 38.0 | 65.0 | 1.0 | 0.35 | 1.95 | 2.90 | 1.90 | 0.43 | 21306AX | 21306AXK |
| 35 | 72 | 23 | 1.1 | 22207EX | 22207EXK | 112000 | 88500 | 7,500 | 9,500 | 3 | 6 | 4 | 42.0 | 65.0 | 1.0 | 0.32 | 2.10 | 3.13 | 2.06 | 0.46 | 22207EX | 22207EXK |
| | 72 | 23 | 1.1 | 22207AEX | 22207AEXK | 94500 | 70000 | 9,600 | 12,400 | 3 | 6 | 4 | 42.0 | 65.0 | 1.0 | 0.39 | 1.74 | 2.60 | 1.71 | 0.46 | 22207AEX | 22207AEXK |
| | 80 | 21 | 1.5 | 21307E | 21307EK | 96000 | 76000 | 7,000 | 8,500 | 3 | 5 | 4 | 44.0 | 71.0 | 1.5 | 0.27 | 2.49 | 3.71 | 2.43 | 0.57 | 21307E | 21307EK |
| | 80 | 21 | 1.5 | 21307AX | 21307AXK | 89000 | 63100 | 9,000 | 11,200 | 3 | 5 | 4 | 44.0 | 71.0 | 1.5 | 0.33 | 2.03 | 3.03 | 1.99 | 0.56 | 21307AX | 21307AXK |
| | 80 | 31 | 1.5 | 22307AEX | 22307AEXK | 145000 | 107000 | 9,000 | 11,500 | 3 | 6 | 4 | 43.5 | 71.5 | 1.5 | 0.48 | 1.41 | 2.10 | 1.38 | 0.78 | 22307AEX | 22307AEXK |
| 40 | 80 | 23 | 1.1 | 22208EX | 22208EXK | 126000 | 102000 | 6,700 | 8,500 | 3 | 6 | 4 | 47.0 | 73.0 | 1.0 | 0.28 | 2.37 | 3.53 | 2.32 | 0.56 | 22208EX | 22208EXK |
| | 80 | 23 | 1.1 | 22208AEX | 22208AEXK | 106000 | 81000 | 8,500 | 10,900 | 3 | 6 | 4 | 47.0 | 73.0 | 1.0 | 0.34 | 1.99 | 2.96 | 1.94 | 0.56 | 22208AEX | 22208AEXK |
| | 90 | 23 | 1.5 | 21308E | 21308EK | 119000 | 95500 | 6,000 | 7,500 | 3 | 5 | 4 | 50.0 | 81.0 | 1.5 | 0.26 | 2.55 | 3.80 | 2.50 | 0.78 | 21308E | 21308EK |
| | 90 | 23 | 1.5 | 21308AX | 21308AXK | 116000 | 84400 | 7,500 | 9,750 | 3 | 5 | 4 | 50.0 | 81.0 | 1.5 | 0.32 | 2.09 | 3.11 | 2.04 | 0.79 | 21308AX | 21308AXK |
| | 90 | 33 | 1.5 | 22308EX | 22308EXK | 185000 | 151000 | 5,300 | 6,700 | 4 | 7 | 4 | 48.5 | 81.5 | 1.5 | 0.37 | 1.83 | 2.72 | 1.79 | 1.07 | 22308EX | 22308EXK |
| | 90 | 33 | 1.5 | 22308AEX | 22308AEXK | 172000 | 134000 | 7,800 | 10,000 | 4 | 7 | 4 | 48.5 | 81.5 | 1.5 | 0.43 | 1.55 | 2.31 | 1.54 | 1.05 | 22308AEX | 22308AEXK |
| 45 | 85 | 23 | 1.1 | 22209EX | 22209EXK | 133000 | 110000 | 6,000 | 7,500 | 3 | 6 | 4 | 52.0 | 78.0 | 1.0 | 0.26 | 2.55 | 3.80 | 2.50 | 0.61 | 22209EX | 22209EXK |
| | 85 | 23 | 1.1 | 22209AEX | 22209AEXK | 113000 | 85500 | 7,900 | 10,200 | 3 | 6 | 4 | 52.0 | 78.0 | 1.0 | 0.31 | 2.15 | 3.21 | 2.11 | 0.60 | 22209AEX | 22209AEXK |
| | 100 | 25 | 1.5 | 21309E | 21309EK | 150000 | 124000 | 5,000 | 6,300 | 3 | 5 | 4 | 55.0 | 92.0 | 1.5 | 0.26 | 2.62 | 3.90 | 2.56 | 1.05 | 21309E | 21309EK |
| | 100 | 25 | 1.5 | 21309AX | 21309AXK | 143000 | 105000 | 6,750 | 9,000 | 3 | 5 | 4 | 55.0 | 92.0 | 1.5 | 0.31 | 2.16 | 3.22 | 2.11 | 1.05 | 21309AX | 21309AXK |
| | 100 | 36 | 1.5 | 22309EX | 22309EXK | 230000 | 182000 | 4,500 | 5,600 | 4 | 8 | 4 | 53.5 | 91.5 | 1.5 | 0.37 | 1.83 | 2.72 | 1.79 | 1.41 | 22309EX | 22309EXK |
| | 100 | 36 | 1.5 | 22309AEX | 22309AEXK | 208000 | 157000 | 7,050 | 9,150 | 4 | 8 | 4 | 53.5 | 91.5 | 1.5 | 0.43 | 1.57 | 2.34 | 1.54 | 1.41 | 22309AEX | 22309AEXK |
| 50 | 90 | 23 | 1.1 | 22210EX | 22210EXK | 142000 | 122000 | 5,600 | 7,100 | 3 | 6 | 4 | 57.0 | 83.0 | 1.0 | 0.24 | 2.79 | 4.15 | 2.73 | 0.65 | 22210EX | 22210EXK |
| | 90 | 23 | 1.1 | 22210AEX | 22210AEXK | 119000 | 93500 | 7,350 | 9,600 | 3 | 6 | 4 | 57.0 | 83.0 | 1.0 | 0.29 | 2.34 | 3.48 | 2.28 | 0.65 | 22210AEX | 22210AEXK |
| | 110 | 27 | 2 | 21310E | 21310EK | 178000 | 151000 | 4,500 | 5,600 | 3 | 5 | 4 | 61.0 | 101.0 | 2.0 | 0.25 | 2.71 | 4.04 | 2.65 | 1.36 | 21310E | 21310EK |
| | 110 | 27 | 2 | 21310AX | 21310AXK | 170000 | 127000 | 6,000 | 8,250 | 3 | 5 | 4 | 61.0 | 101.0 | 2.0 | 0.30 | 2.24 | 3.34 | 2.19 | 1.36 | 21310AX | 21310AXK |
| | 110 | 40 | 2 | 22310EX | 22310EXK | 280000 | 235000 | 4,300 | 5,300 | 4 | 8 | 4 | 60.0 | 100.0 | 2.0 | 0.36 | 1.85 | 2.75 | 1.81 | 1.92 | 22310EX | 22310EXK |
| | 110 | 40 | 2 | 22310AEX | 22310AEXK | 254000 | 205000 | 6,300 | 8,250 | 4 | 8 | 4 | 60.0 | 100.0 | 2.0 | 0.42 | 1.62 | 2.42 | 1.59 | 1.88 | 22310AEX | 22310AEXK |

Note: Suffix K or K30 means tapered bore (1/12 or 1/30).

# Spherical Roller Bearings

Bore Diameter: 55～75mm

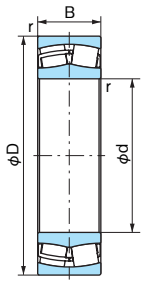


Cylindrical bore

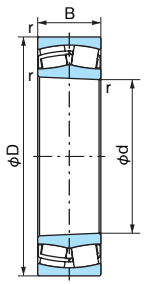


Tapered bore

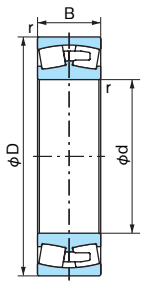


With machined brass cage

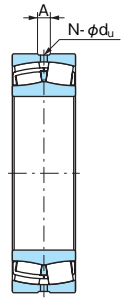


With oil holes / oil groove (W33)

1N=0.102kgf

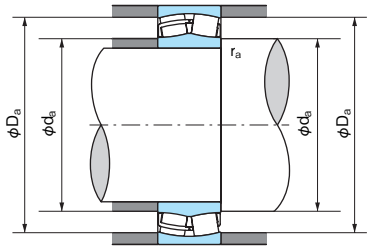


**■Dynamic equivalent radial load**

Pr=XFr+YFa

| $\frac{Fa}{Fr} \leqq e$ | | $\frac{Fa}{Fr} > e$ | |
|---|---|---|---|
| X | Y | X | Y |
| 1 | $Y_1$ | 0.67 | $Y_2$ |

Values of $Y_1$, $Y_2$ and e from table.

**■Static equivalent radial load**

$P_{or}=F_r+Y_0F_a$

Values $Y_0$ from table.

| Boundary dimensions (mm) | | | | Bearing No. | | Basic dynamic load rating Cr (N) | Basic static load rating Cor (N) | Limiting speed (min-1) | | Dimensions of lubrication holes and grooves | | | Abutment and fillet dimensions (mm) | | | Constant e | Axial load factor | | | Mass (kg) Cylindrical bore (Reference) | Bearing No. | |
|---|---|---|---|---|---|---|---|---|---|---|---|---|---|---|---|---|---|---|---|---|---|---|
| d | D | B | r (min) | Cylindrical bore | Tapered bore | | | Grease lubrication | Oil lubrication | Hole diameter du | Groove width A | Hole count N | da (min) | Da (max) | ra (max) | | Y1 | Y2 | Y0 | | Cylindrical bore | Tapered bore |
| 55 | 100 | 25 | 1.5 | 22211EX | 22211EXK | 171000 | 144000 | 5,300 | 6,700 | 3 | 6 | 4 | 63.5 | 91.5 | 1.5 | 0.24 | 2.84 | 4.23 | 2.78 | 0.88 | 22211EX | 22211EXK |
| | 100 | 25 | 1.5 | 22211AEX | 22211AEXK | 150000 | 118000 | 6,750 | 8,550 | 3 | 6 | 4 | 63.5 | 91.5 | 1.5 | 0.29 | 2.34 | 3.48 | 2.28 | 0.89 | 22211AEX | 22211AEXK |
| | 120 | 29 | 2 | 21311EX1 | 21311EX1K | 200000 | 165000 | 4,500 | 5,600 | 3 | 5 | 4 | 65.0 | 110.0 | 2.0 | 0.25 | 2.71 | 4.03 | 2.65 | 1.70 | 21311EX1 | 21311EX1K |
| | 120 | 29 | 2 | 21311AX | 21311AXK | 206000 | 171000 | 6,000 | 7,500 | 3 | 5 | 4 | 65.0 | 110.0 | 2.0 | 0.29 | 2.32 | 3.45 | 2.27 | 1.77 | 21311AX | 21311AXK |
| | 120 | 43 | 2 | 22311EX | 22311EXK | 325000 | 263000 | 3,800 | 4,800 | 4 | 8 | 4 | 65.0 | 110.0 | 2.0 | 0.36 | 1.85 | 2.75 | 1.81 | 2.40 | 22311EX | 22311EXK |
| | 120 | 43 | 2 | 22311AEX | 22311AEXK | 294000 | 227000 | 6,000 | 7,650 | 4 | 8 | 4 | 65.0 | 110.0 | 2.0 | 0.43 | 1.56 | 2.33 | 1.53 | 2.39 | 22311AEX | 22311AEXK |
| 60 | 110 | 28 | 1.5 | 22212EX | 22212EXK | 210000 | 179000 | 4,800 | 6,000 | 3 | 6 | 4 | 68.5 | 101.5 | 1.5 | 0.25 | 2.74 | 4.08 | 2.68 | 1.20 | 22212EX | 22212EXK |
| | 110 | 28 | 1.5 | 22212AEX | 22212AEXK | 179000 | 144000 | 6,150 | 7,800 | 3 | 6 | 4 | 68.5 | 101.5 | 1.5 | 0.29 | 2.29 | 3.41 | 2.24 | 1.22 | 22212AEX | 22212AEXK |
| | 130 | 31 | 2.1 | 21312EX1 | 21312EX1K | 238000 | 193000 | 3,800 | 4,800 | 3 | 5 | 4 | 72.0 | 118.0 | 2.0 | 0.24 | 2.78 | 4.14 | 2.72 | 2.10 | 21312EX1 | 21312EX1K |
| | 130 | 31 | 2.1 | 21312AX | 21312AXK | 228000 | 192000 | 5,250 | 6,750 | 3 | 5 | 4 | 72.0 | 118.0 | 2.0 | 0.29 | 2.36 | 3.52 | 2.31 | 2.19 | 21312AX | 21312AXK |
| | 130 | 46 | 2.1 | 22312EX | 22312EXK | 390000 | 330000 | 3,600 | 4,500 | 4 | 8 | 4 | 72.0 | 118.0 | 2.0 | 0.36 | 1.86 | 2.77 | 1.82 | 3.05 | 22312EX | 22312EXK |
| | 130 | 46 | 2.1 | 22312AEX | 22312AEXK | 340000 | 275000 | 5,400 | 6,900 | 4 | 8 | 4 | 72.0 | 118.0 | 2.0 | 0.41 | 1.65 | 2.46 | 1.62 | 3.01 | 22312AEX | 22312AEXK |
| 65 | 120 | 31 | 1.5 | 22213EX | 22213EXK | 246000 | 209000 | 4,300 | 5,300 | 3 | 6 | 4 | 73.5 | 111.5 | 1.5 | 0.25 | 2.69 | 4.00 | 2.63 | 1.56 | 22213EX | 22213EXK |
| | 120 | 31 | 1.5 | 22213AEX | 22213AEXK | 213000 | 169000 | 5,700 | 7,200 | 3 | 6 | 4 | 73.5 | 111.5 | 1.5 | 0.30 | 2.26 | 3.36 | 2.21 | 1.60 | 22213AEX | 22213AEXK |
| | 140 | 33 | 2.1 | 21313EX1 | 21313EX1K | 270000 | 232000 | 3,600 | 4,500 | 3 | 6 | 4 | 77.0 | 128.0 | 2.0 | 0.24 | 2.83 | 4.21 | 2.76 | 2.60 | 21313EX1 | 21313EX1K |
| | 140 | 33 | 2.1 | 21313AX | 21313AXK | 261000 | 222000 | 5,100 | 6,400 | 3 | 6 | 4 | 77.0 | 128.0 | 2.0 | 0.28 | 2.40 | 3.57 | 2.35 | 2.69 | 21313AX | 21313AXK |
| | 140 | 48 | 2.1 | 22313EX | 22313EXK | 415000 | 355000 | 3,200 | 4,000 | 4 | 8 | 4 | 77.0 | 128.0 | 2.0 | 0.34 | 1.98 | 2.94 | 1.93 | 3.67 | 22313EX | 22313EXK |
| | 140 | 48 | 2.1 | 22313AEX | 22313AEXK | 380000 | 310000 | 4,950 | 6,450 | 4 | 8 | 4 | 77.0 | 128.0 | 2.0 | 0.39 | 1.72 | 2.55 | 1.68 | 3.64 | 22313AEX | 22313AEXK |
| 70 | 125 | 31 | 1.5 | 22214EX | 22214EXK | 257000 | 220000 | 4,000 | 5,300 | 3 | 6 | 4 | 78.5 | 116.5 | 1.5 | 0.24 | 2.87 | 4.27 | 2.80 | 1.65 | 22214EX | 22214EXK |
| | 125 | 31 | 1.5 | 22214AEX | 22214AEXK | 225000 | 185000 | 5,400 | 6,900 | 3 | 6 | 4 | 78.5 | 116.5 | 1.5 | 0.28 | 2.39 | 3.55 | 2.33 | 1.69 | 22214AEX | 22214AEXK |
| | 150 | 35 | 2.1 | 21314EX1 | 21314EX1K | 310000 | 260000 | 3,200 | 4,000 | 3 | 6 | 4 | 82.0 | 138.0 | 2.0 | 0.24 | 2.84 | 4.23 | 2.78 | 3.10 | 21314EX1 | 21314EX1K |
| | 150 | 35 | 2.1 | 21314AX | 21314AXK | 305000 | 268000 | 4,500 | 6,000 | 3 | 6 | 4 | 82.0 | 138.0 | 2.0 | 0.28 | 2.45 | 3.64 | 2.39 | 3.30 | 21314AX | 21314AXK |
| | 150 | 51 | 2.1 | 22314EX | 22314EXK | 480000 | 415000 | 3,000 | 3,800 | 5 | 10 | 4 | 82.0 | 138.0 | 2.0 | 0.34 | 1.98 | 2.94 | 1.93 | 4.45 | 22314EX | 22314EXK |
| | 150 | 51 | 2.1 | 22314AEX | 22314AEXK | 445000 | 365000 | 4,650 | 6,000 | 5 | 10 | 4 | 82.0 | 138.0 | 2.0 | 0.40 | 1.71 | 2.54 | 1.67 | 4.46 | 22314AEX | 22314AEXK |
| 75 | 130 | 31 | 1.5 | 22215EX | 22215EXK | 265000 | 234000 | 4,000 | 5,000 | 3 | 6 | 4 | 83.5 | 121.5 | 1.5 | 0.22 | 3.07 | 4.58 | 3.01 | 1.74 | 22215EX | 22215EXK |
| | 130 | 31 | 1.5 | 22215AEX | 22215AEXK | 234000 | 191000 | 5,100 | 6,600 | 3 | 6 | 4 | 83.5 | 121.5 | 1.5 | 0.27 | 2.51 | 3.73 | 2.46 | 1.76 | 22215AEX | 22215AEXK |
| | 160 | 37 | 2.1 | 21315EX1 | 21315EX1K | 340000 | 298000 | 3,200 | 4,000 | 3 | 6 | 4 | 87.0 | 148.0 | 2.0 | 0.23 | 2.87 | 4.27 | 2.80 | 3.80 | 21315EX1 | 21315EX1K |
| | 160 | 37 | 2.1 | 21315AX | 21315AXK | 325000 | 286000 | 4,350 | 5,550 | 3 | 6 | 4 | 87.0 | 148.0 | 2.0 | 0.27 | 2.50 | 3.72 | 2.44 | 3.95 | 21315AX | 21315AXK |
| | 160 | 55 | 2.1 | 22315EX | 22315EXK | 550000 | 475000 | 2,800 | 3,600 | 5 | 10 | 4 | 87.0 | 148.0 | 2.0 | 0.35 | 1.95 | 2.90 | 1.91 | 5.44 | 22315EX | 22315EXK |
| | 160 | 55 | 2.1 | 22315AEX | 22315AEXK | 495000 | 415000 | 4,350 | 5,500 | 5 | 10 | 4 | 87.0 | 148.0 | 2.0 | 0.39 | 1.72 | 2.56 | 1.68 | 5.44 | 22315AEX | 22315AEXK |

Note: Suffix K or K30 means tapered bore (1/12 or 1/30).

# Spherical Roller Bearings

Bore Diameter: 80～95mm

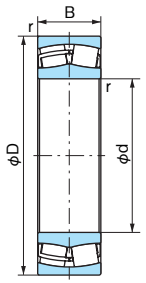


Cylindrical bore

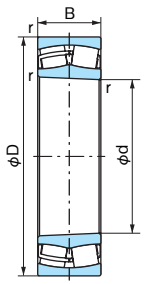


Tapered bore

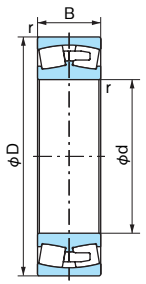


With machined brass cage

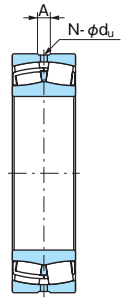


With oil holes / oil groove (W33)

1N=0.102kgf

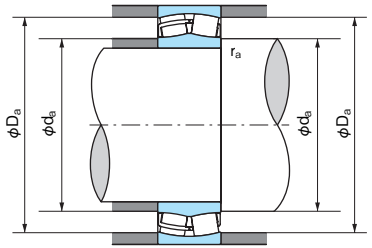


**■Dynamic equivalent radial load**

Pr=XFr+YFa

| $\frac{Fa}{Fr} \leqq e$ | | $\frac{Fa}{Fr} > e$ | |
|---|---|---|---|
| X | Y | X | Y |
| 1 | $Y_1$ | 0.67 | $Y_2$ |

Values of $Y_1$, $Y_2$ and e from table.

**■Static equivalent radial load**

$P_{or}=F_r+Y_0F_a$

Values $Y_0$ from table.

| Boundary dimensions (mm) | | | | Bearing No. | | Basic dynamic load rating Cr (N) | Basic static load rating Cor (N) | Limiting speed (min-1) | | Dimensions of lubrication holes and grooves | | | Abutment and fillet dimensions (mm) | | | Constant e | Axial load factor | | | Mass (kg) Cylindrical bore (Reference) | Bearing No. | |
|---|---|---|---|---|---|---|---|---|---|---|---|---|---|---|---|---|---|---|---|---|---|---|
| d | D | B | r (min) | Cylindrical bore | Tapered bore | | | Grease lubrication | Oil lubrication | Hole diameter du | Groove width A | Hole count N | da (min) | Da (max) | ra (max) | | $Y_1$ | $Y_2$ | $Y_0$ | | Cylindrical bore | Tapered bore |
| 80 | 140 | 33 | 2 | 22216EX | 22216EXK | 299000 | 269000 | 3,600 | 4,500 | 3 | 6 | 4 | 90.0 | 130.0 | 2.0 | 0.22 | 3.07 | 4.58 | 3.01 | 2.19 | 22216EX | 22216EXK |
| | 140 | 33 | 2 | 22216AEX | 22216AEXK | 279000 | 230000 | 4,800 | 6,100 | 3 | 6 | 4 | 90.0 | 130.0 | 2.0 | 0.27 | 2.51 | 3.74 | 2.46 | 2.24 | 22216AEX | 22216AEXK |
| | 140 | 44.4 | 2 | 23216E | 23216EK | 335000 | 335000 | 3,300 | 4,350 | 4 | 8 | 4 | 90.0 | 130.0 | 2.0 | 0.29 | 2.35 | 3.50 | 2.30 | 2.95 | 23216E | 23216EK |
| | 170 | 39 | 2.1 | 21316EX1 | 21316EX1K | 380000 | 339000 | 3,000 | 3,800 | 4 | 8 | 4 | 92.0 | 158.0 | 2.0 | 0.23 | 2.88 | 4.29 | 2.82 | 4.50 | 21316EX1 | 21316EX1K |
| | 170 | 39 | 2.1 | 21316AX | 21316AXK | 355000 | 318000 | 4,200 | 5,250 | 4 | 8 | 4 | 92.0 | 158.0 | 2.0 | 0.26 | 2.55 | 3.80 | 2.50 | 4.67 | 21316AX | 21316AXK |
| | 170 | 58 | 2.1 | 22316EX | 22316EXK | 595000 | 520000 | 2,600 | 3,400 | 5 | 10 | 4 | 92.0 | 158.0 | 2.0 | 0.35 | 1.95 | 2.90 | 1.91 | 6.42 | 22316EX | 22316EXK |
| | 170 | 58 | 2.1 | 22316AEX | 22316AEXK | 550000 | 465000 | 4,050 | 5,250 | 5 | 10 | 4 | 92.0 | 158.0 | 2.0 | 0.38 | 1.75 | 2.61 | 1.72 | 6.43 | 22316AEX | 22316AEXK |
| 85 | 150 | 36 | 2 | 22217EX | 22217EXK | 355000 | 320000 | 3,400 | 4,300 | 4 | 7 | 4 | 95.0 | 140.0 | 2.0 | 0.22 | 3.01 | 4.48 | 2.94 | 2.75 | 22217EX | 22217EXK |
| | 150 | 36 | 2 | 22217AEX | 22217AEXK | 310000 | 260000 | 4,200 | 5,700 | 4 | 7 | 4 | 95.0 | 140.0 | 2.0 | 0.27 | 2.47 | 3.67 | 2.41 | 2.82 | 22217AEX | 22217AEXK |
| | 150 | 49.2 | 2 | 23217E | 23217EK | 395000 | 405000 | 3,150 | 4,050 | 4 | 8 | 4 | 95.0 | 140.0 | 2.0 | 0.30 | 2.24 | 3.34 | 2.19 | 3.78 | 23217E | 23217EK |
| | 180 | 41 | 3 | 21317EX1 | 21317EX1K | 415000 | 372000 | 3,000 | 4,000 | 4 | 8 | 4 | 99.0 | 166.0 | 2.5 | 0.23 | 2.89 | 4.30 | 2.83 | 5.30 | 21317EX1 | 21317EX1K |
| | 180 | 41 | 3 | 21317AX | 21317AXK | 400000 | 364000 | 3,900 | 5,100 | 4 | 8 | 4 | 99.0 | 166.0 | 2.5 | 0.26 | 2.55 | 3.79 | 2.49 | 5.52 | 21317AX | 21317AXK |
| | 180 | 60 | 3 | 22317EX | 22317EXK | 665000 | 585000 | 2,400 | 3,200 | 6 | 11 | 4 | 99.0 | 166.0 | 2.5 | 0.33 | 2.02 | 3.00 | 1.97 | 7.46 | 22317EX | 22317EXK |
| | 180 | 60 | 3 | 22317AEX | 22317AEXK | 590000 | 500000 | 3,900 | 4,950 | 6 | 11 | 4 | 99.0 | 166.0 | 2.5 | 0.38 | 1.78 | 2.65 | 1.74 | 7.47 | 22317AEX | 22317AEXK |
| 90 | 160 | 40 | 2 | 22218EX | 22218EXK | 410000 | 375000 | 3,200 | 4,000 | 4 | 7 | 4 | 100.0 | 150.0 | 2.0 | 0.24 | 2.79 | 4.15 | 2.73 | 3.50 | 22218EX | 22218EXK |
| | 160 | 40 | 2 | 22218AEX | 22218AEXK | 360000 | 310000 | 4,000 | 5,400 | 4 | 7 | 4 | 100.0 | 150.0 | 2.0 | 0.28 | 2.42 | 3.60 | 2.36 | 3.56 | 22218AEX | 22218AEXK |
| | 160 | 52.4 | 2 | 23218EX1 | 23218EX1K | 470000 | 482000 | 3,100 | 4,200 | 5 | 10 | 4 | 100.0 | 150.0 | 2.0 | 0.32 | 2.14 | 3.19 | 2.09 | 4.57 | 23218EX1 | 23218EX1K |
| | 190 | 43 | 3 | 21318EX1 | 21318EX1K | 460000 | 410000 | 2,800 | 3,600 | 4 | 8 | 6 | 104.0 | 176.0 | 2.5 | 0.23 | 2.91 | 4.33 | 2.84 | 6.10 | 21318EX1 | 21318EX1K |
| | 190 | 43 | 3 | 21318AX | 21318AXK | 460000 | 416000 | 3,700 | 4,800 | 4 | 8 | 6 | 104.0 | 176.0 | 2.5 | 0.26 | 2.55 | 3.80 | 2.50 | 6.45 | 21318AX | 21318AXK |
| | 190 | 64 | 3 | 22318EX | 22318EXK | 745000 | 660000 | 2,400 | 3,000 | 6 | 11 | 6 | 104.0 | 176.0 | 2.5 | 0.34 | 2.00 | 2.98 | 1.96 | 8.82 | 22318EX | 22318EXK |
| | 190 | 64 | 3 | 22318AEX | 22318AEXK | 690000 | 585000 | 3,700 | 4,800 | 6 | 11 | 6 | 104.0 | 176.0 | 2.5 | 0.39 | 1.73 | 2.57 | 1.69 | 8.91 | 22318AEX | 22318AEXK |
| 95 | 170 | 43 | 2.1 | 22219EX | 22219EXK | 465000 | 420000 | 3,000 | 3,800 | 5 | 8 | 4 | 107.0 | 158.0 | 2.0 | 0.24 | 2.76 | 4.11 | 2.70 | 4.24 | 22219EX | 22219EXK |
| | 170 | 43 | 2.1 | 22219AEX | 22219AEXK | 410000 | 360000 | 3,900 | 5,100 | 5 | 8 | 4 | 107.0 | 158.0 | 2.0 | 0.28 | 2.38 | 3.55 | 2.33 | 4.35 | 22219AEX | 22219AEXK |
| | 170 | 55.6 | 2.1 | 23219E | 23219EK | 500000 | 510000 | 2,800 | 3,600 | 5 | 10 | 4 | 107.0 | 158.0 | 2.0 | 0.30 | 2.24 | 3.34 | 2.19 | 5.46 | 23219E | 23219EK |
| | 200 | 45 | 3 | 21319EX1 | 21319EX1K | 500000 | 461000 | 2,700 | 3,400 | 4 | 8 | 6 | 109.0 | 186.0 | 2.5 | 0.23 | 2.92 | 4.35 | 2.86 | 7.10 | 21319EX1 | 21319EX1K |
| | 200 | 45 | 3 | 21319AX | 21319AXK | 495000 | 450000 | 3,400 | 4,500 | 4 | 8 | 6 | 109.0 | 186.0 | 2.5 | 0.27 | 2.54 | 3.79 | 2.49 | 7.44 | 21319AX | 21319AXK |
| | 200 | 67 | 3 | 22319EX | 22319EXK | 815000 | 725000 | 2,200 | 2,900 | 6 | 12 | 6 | 109.0 | 186.0 | 2.5 | 0.33 | 2.02 | 3.00 | 1.97 | 10.2 | 22319EX | 22319EXK |
| | 200 | 67 | 3 | 22319AEX | 22319AEXK | 755000 | 645000 | 3,450 | 4,500 | 6 | 12 | 6 | 109.0 | 186.0 | 2.5 | 0.39 | 1.74 | 2.59 | 1.70 | 10.3 | 22319AEX | 22319AEXK |

Note: Suffix K or K30 means tapered bore (1/12 or 1/30).

# Spherical Roller Bearings

Bore Diameter: 100～110mm

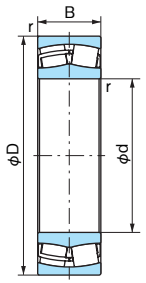


Cylindrical bore

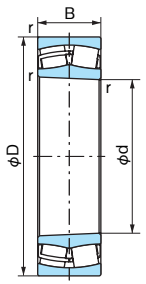


Tapered bore

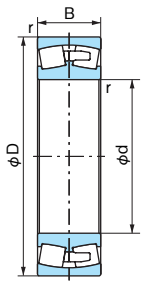


With machined brass cage

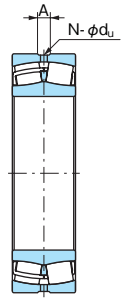


With oil holes / oil groove (W33)

1N=0.102kgf

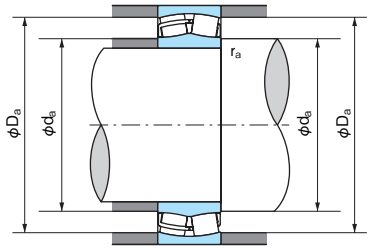


**■Dynamic equivalent radial load**

Pr=XFr+YFa

| $\frac{Fa}{Fr} \leqq e$ | | $\frac{Fa}{Fr} > e$ | |
|---|---|---|---|
| X | Y | X | Y |
| 1 | $Y_1$ | 0.67 | $Y_2$ |

Values of $Y_1$, $Y_2$ and e from table.

**■Static equivalent radial load**

$P_{or}=F_r+Y_0F_a$

Values $Y_0$ from table.

| Boundary dimensions (mm) | | | | Bearing No. | | Basic dynamic load rating Cr (N) | Basic static load rating Cor (N) | Limiting speed (min-1) | | Dimensions of lubrication holes and grooves | | | Abutment and fillet dimensions (mm) | | | Constant e | Axial load factor | | | Mass (kg) Cylindrical bore (Reference) | Bearing No. | |
|---|---|---|---|---|---|---|---|---|---|---|---|---|---|---|---|---|---|---|---|---|---|---|
| d | D | B | r (min) | Cylindrical bore | Tapered bore | | | Grease lubrication | Oil lubrication | Hole diameter du | Groove width A | Hole count N | da (min) | Da (max) | ra (max) | | Y1 | Y2 | Y0 | | Cylindrical bore | Tapered bore |
| 100 | 140 | 30 | 1.1 | **23920E** | **23920EK** | 197000 | 233000 | 3,400 | 4,500 | 3 | 8 | 4 | 107.0 | 133.0 | 1.0 | 0.20 | 3.42 | 5.08 | 3.34 | 1.46 | **23920E** | **23920EK** |
| | 150 | 37 | 1.5 | **23020E** | **23020EK** | 286000 | 325000 | 2,700 | 3,700 | 4 | 7 | 4 | 117.0 | 141.0 | 1.5 | 0.22 | 3.01 | 4.48 | 2.94 | 2.33 | **23020E** | **23020EK** |
| | 150 | 37 | 1.5 | **23020AX** | **23020AXK** | 267000 | 298000 | 4,200 | 5,400 | 4 | 7 | 4 | 117.0 | 141.0 | 1.5 | 0.26 | 2.64 | 3.93 | 2.58 | 2.40 | **23020AX** | **23020AXK** |
| | 165 | 52 | 2 | **23120EX1** | **23120EX1K** | 450000 | 500000 | 2,500 | 3,300 | 5 | 9 | 4 | 110.0 | 155.0 | 2.0 | 0.29 | 2.33 | 3.47 | 2.28 | 4.49 | **23120EX1** | **23120EX1K** |
| | 165 | 52 | 2 | **23120AX** | **23120AXK** | 450000 | 538000 | 3,300 | 4,500 | 5 | 9 | 4 | 110.0 | 155.0 | 2.0 | 0.34 | 1.98 | 2.94 | 1.93 | 4.70 | **23120AX** | **23120AXK** |
| | 180 | 46 | 2.1 | **22220EX** | **22220EXK** | 520000 | 480000 | 2,800 | 3,600 | 5 | 8 | 4 | 112.0 | 168.0 | 2.0 | 0.25 | 2.74 | 4.08 | 2.68 | 5.10 | **22220EX** | **22220EXK** |
| | 180 | 46 | 2.1 | **22220AEX** | **22220AEXK** | 465000 | 410000 | 3,700 | 4,800 | 5 | 8 | 4 | 112.0 | 168.0 | 2.0 | 0.29 | 2.37 | 3.52 | 2.31 | 5.24 | **22220AEX** | **22220AEXK** |
| | 180 | 60.3 | 2.1 | **23220EX1** | **23220EX1K** | 595000 | 629000 | 2,800 | 3,750 | 5 | 10 | 4 | 112.0 | 168.0 | 2.0 | 0.32 | 2.09 | 3.11 | 2.04 | 6.76 | **23220EX1** | **23220EX1K** |
| | 180 | 60.3 | 2.1 | **23220AX** | **23220AXK** | 575000 | 599000 | 3,100 | 4,200 | 5 | 10 | 4 | 112.0 | 168.0 | 2.0 | 0.36 | 1.88 | 2.80 | 1.84 | 6.88 | **23220AX** | **23220AXK** |
| | 215 | 47 | 3 | **21320EX1** | **21320EX1K** | 580000 | 524000 | 2,400 | 3,300 | 4 | 8 | 6 | 114.0 | 201.0 | 2.5 | 0.22 | 3.02 | 4.49 | 2.95 | 8.70 | **21320EX1** | **21320EX1K** |
| | 215 | 47 | 3 | **21320AX** | **21320AXK** | 545000 | 488000 | 3,300 | 4,200 | 4 | 8 | 6 | 114.0 | 201.0 | 2.5 | 0.26 | 2.62 | 3.91 | 2.57 | 9.06 | **21320AX** | **21320AXK** |
| | 215 | 73 | 3 | **22320EX** | **22320EXK** | 975000 | 875000 | 2,000 | 2,800 | 6 | 12 | 6 | 114.0 | 201.0 | 2.5 | 0.35 | 1.95 | 2.90 | 1.91 | 13.1 | **22320EX** | **22320EXK** |
| | 215 | 73 | 3 | **22320AEX** | **22320AEXK** | 890000 | 775000 | 3,300 | 4,200 | 6 | 12 | 6 | 114.0 | 201.0 | 2.5 | 0.39 | 1.72 | 2.57 | 1.69 | 13.2 | **22320AEX** | **22320AEXK** |
| 110 | 170 | 45 | 2 | **23022E** | **23022EK** | 415000 | 475000 | 2,700 | 3,600 | 5 | 9 | 4 | 120.0 | 160.0 | 2.0 | 0.24 | 2.84 | 4.23 | 2.78 | 3.84 | **23022E** | **23022EK** |
| | 170 | 45 | 2 | **23022AX** | **23022AXK** | 415000 | 478000 | 3,750 | 4,800 | 5 | 9 | 4 | 120.0 | 160.0 | 2.0 | 0.28 | 2.42 | 3.61 | 2.37 | 3.90 | **23022AX** | **23022AXK** |
| | 180 | 56 | 2 | **23122EX1** | **23122EX1K** | 540000 | 610000 | 2,700 | 3,600 | 5 | 9 | 4 | 120.0 | 170.0 | 2.0 | 0.29 | 2.36 | 3.51 | 2.31 | 5.70 | **23122EX1** | **23122EX1K** |
| | 180 | 56 | 2 | **23122AX** | **23122AXK** | 535000 | 605000 | 3,000 | 4,050 | 5 | 9 | 4 | 120.0 | 170.0 | 2.0 | 0.33 | 2.04 | 3.03 | 1.99 | 5.80 | **23122AX** | **23122AXK** |
| | 180 | 69 | 2 | **24122EX1** | **24122EX1K30** | 633000 | 743000 | 2,700 | 3,600 | 6 | 11 | 4 | 120.0 | 170.0 | 2.0 | 0.37 | 1.84 | 2.74 | 1.80 | 6.89 | **24122EX1** | **24122EX1K30** |
| | 180 | 69 | 2 | **24122AX** | **24122AXK30** | 620000 | 654000 | 2,700 | 3,600 | 6 | 11 | 4 | 120.0 | 170.0 | 2.0 | 0.37 | 1.80 | 2.69 | 1.76 | 6.85 | **24122AX** | **24122AXK30** |
| | 200 | 53 | 2.1 | **22222EX** | **22222EXK** | 680000 | 640000 | 2,600 | 3,200 | 5 | 10 | 6 | 122.0 | 188.0 | 2.0 | 0.26 | 2.64 | 3.93 | 2.58 | 7.36 | **22222EX** | **22222EXK** |
| | 200 | 53 | 2.1 | **22222AEX** | **22222AEXK** | 605000 | 550000 | 3,300 | 4,350 | 6 | 10 | 6 | 122.0 | 188.0 | 2.0 | 0.29 | 2.31 | 3.44 | 2.26 | 7.53 | **22222AEX** | **22222AEXK** |
| | 200 | 69.8 | 2.1 | **23222EX1** | **23222EX1K** | 750000 | 793000 | 2,550 | 3,300 | 6 | 11 | 6 | 122.0 | 188.0 | 2.0 | 0.34 | 1.99 | 2.96 | 1.94 | 9.60 | **23222EX1** | **23222EX1K** |
| | 200 | 69.8 | 2.1 | **23222AX** | **23222AXK** | 740000 | 801000 | 2,850 | 3,750 | 6 | 11 | 6 | 122.0 | 188.0 | 2.0 | 0.38 | 1.78 | 2.65 | 1.74 | 10.0 | **23222AX** | **23222AXK** |
| | 240 | 50 | 3 | **21322EX1** | **21322EX1K** | 675000 | 635000 | 2,100 | 2,850 | 4 | 8 | 6 | 124.0 | 226.0 | 2.5 | 0.21 | 3.19 | 4.75 | 3.12 | 11.6 | **21322EX1** | **21322EX1K** |
| | 240 | 50 | 3 | **21322AX** | **21322AXK** | 655000 | 601000 | 3,000 | 3,750 | 4 | 8 | 6 | 124.0 | 226.0 | 2.5 | 0.24 | 2.78 | 4.14 | 2.72 | 12.2 | **21322AX** | **21322AXK** |
| | 240 | 80 | 3 | **22322EX** | **22322EXK** | 1150000 | 1040000 | 1,950 | 2,700 | 6 | 12 | 6 | 124.0 | 226.0 | 2.5 | 0.33 | 2.03 | 3.02 | 1.98 | 18.1 | **22322EX** | **22322EXK** |
| | 240 | 80 | 3 | **22322AEX** | **22322AEXK** | 1030000 | 940000 | 3,000 | 3,750 | 6 | 12 | 6 | 124.0 | 226.0 | 2.5 | 0.38 | 1.77 | 2.63 | 1.73 | 18.2 | **22322AEX** | **22322AEXK** |

Note: Suffix K or K30 means tapered bore (1/12 or 1/30).

# Spherical Roller Bearings

Bore Diameter: 120～130mm

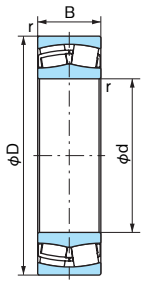


Cylindrical bore

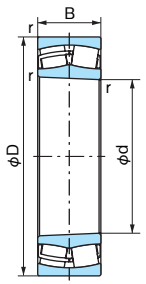


Tapered bore

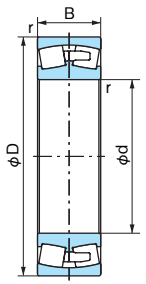


With machined brass cage

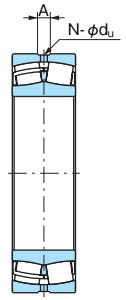


With oil holes / oil groove (W33)

1N=0.102kgf

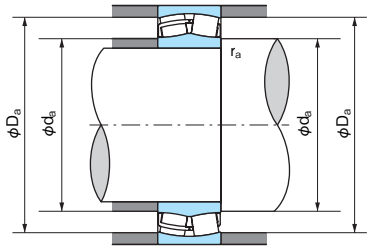


**■Dynamic equivalent radial load**

Pr=XFr+YFa

| $\frac{Fa}{Fr} \leqq e$ | | $\frac{Fa}{Fr} > e$ | |
|---|---|---|---|
| X | Y | X | Y |
| 1 | $Y_1$ | 0.67 | $Y_2$ |

Values of $Y_1$, $Y_2$ and e from table.

**■Static equivalent radial load**

$P_{or}=F_r+Y_0F_a$

Values $Y_0$ from table.

| Boundary dimensions (mm) | | | | Bearing No. | | Basic dynamic load rating Cr (N) | Basic static load rating Cor (N) | Limiting speed (min-1) | | Dimensions of lubrication holes and grooves | | | Abutment and fillet dimensions (mm) | | | Constant e | Axial load factor | | | Mass (kg) Cylindrical bore (Reference) | Bearing No. | |
|---|---|---|---|---|---|---|---|---|---|---|---|---|---|---|---|---|---|---|---|---|---|---|
| d | D | B | r (min) | Cylindrical bore | Tapered bore | | | Grease lubrication | Oil lubrication | Hole diameter du | Groove width A | Hole count N | da (min) | Da (max) | ra (max) | | Y1 | Y2 | Y0 | | Cylindrical bore | Tapered bore |
| 120 | 180 | 46 | 2 | 23024E | 23024EK | 430000 | 515000 | 2,550 | 3,300 | 5 | 9 | 4 | 130.0 | 170.0 | 2.0 | 0.23 | 2.95 | 4.39 | 2.89 | 4.20 | 23024E | 23024EK |
| | 180 | 46 | 2 | 23024AX | 23024AXK | 430000 | 516000 | 3,450 | 4,500 | 5 | 9 | 4 | 130.0 | 170.0 | 2.0 | 0.27 | 2.52 | 3.76 | 2.47 | 4.20 | 23024AX | 23024AXK |
| | 180 | 60 | 2 | 24024EX1 | 24024EX1K30 | 540000 | 683000 | 2,550 | 3,450 | 5 | 9 | 4 | 130.0 | 170.0 | 2.0 | 0.30 | 2.23 | 3.32 | 2.18 | 5.36 | 24024EX1 | 24024EX1K30 |
| | 180 | 60 | 2 | 24024AX | 24024AXK30 | 540000 | 627000 | 2,550 | 3,450 | 5 | 9 | 4 | 130.0 | 170.0 | 2.0 | 0.31 | 2.21 | 3.29 | 2.16 | 5.26 | 24024AX | 24024AXK30 |
| | 200 | 62 | 2 | 23124EX1 | 23124EX1K | 675000 | 720000 | 2,400 | 3,300 | 5 | 9 | 6 | 130.0 | 190.0 | 2.0 | 0.29 | 2.34 | 3.49 | 2.29 | 7.90 | 23124EX1 | 23124EX1K |
| | 200 | 62 | 2 | 23124AX | 23124AXK | 645000 | 734000 | 2,700 | 3,600 | 5 | 9 | 6 | 130.0 | 190.0 | 2.0 | 0.34 | 2.00 | 2.99 | 1.96 | 8.10 | 23124AX | 23124AXK |
| | 200 | 80 | 2 | 24124EX1 | 24124EX1K30 | 815000 | 970000 | 2,400 | 3,300 | 6 | 11 | 6 | 130.0 | 190.0 | 2.0 | 0.38 | 1.78 | 2.65 | 1.74 | 10.1 | 24124EX1 | 24124EX1K30 |
| | 200 | 80 | 2 | 24124AX | 24124AXK30 | 780000 | 850000 | 2,400 | 3,300 | 6 | 11 | 6 | 130.0 | 190.0 | 2.0 | 0.39 | 1.73 | 2.58 | 1.69 | 9.90 | 24124AX | 24124AXK30 |
| | 215 | 58 | 2.1 | 22224EX | 22224EXK | 785000 | 765000 | 2,400 | 3,000 | 5 | 10 | 6 | 132.0 | 203.0 | 2.0 | 0.26 | 2.60 | 3.87 | 2.54 | 9.28 | 22224EX | 22224EXK |
| | 215 | 58 | 2.1 | 22224AEX | 22224AEXK | 700000 | 650000 | 3,150 | 4,050 | 5 | 10 | 6 | 132.0 | 203.0 | 2.0 | 0.30 | 2.28 | 3.40 | 2.23 | 9.35 | 22224AEX | 22224AEXK |
| | 215 | 76 | 2.1 | 23224EX1 | 23224EX1K | 860000 | 956000 | 2,250 | 3,150 | 6 | 13 | 6 | 132.0 | 203.0 | 2.0 | 0.34 | 1.97 | 2.94 | 1.93 | 12.0 | 23224EX1 | 23224EX1K |
| | 215 | 76 | 2.1 | 23224AX | 23224AXK | 860000 | 962000 | 2,550 | 3,450 | 6 | 13 | 6 | 132.0 | 203.0 | 2.0 | 0.39 | 1.73 | 2.57 | 1.69 | 12.3 | 23224AX | 23224AXK |
| | 260 | 55 | 3 | 21324E | 21324EK | 790000 | 765000 | 1,950 | 2,400 | 5 | 12 | 6 | 134.0 | 246.0 | 2.5 | 0.21 | 3.17 | 4.72 | 3.10 | 15.3 | 21324E | 21324EK |
| | 260 | 86 | 3 | 22324EX | 22324EXK | 1250000 | 1130000 | 1,800 | 2,600 | 8 | 14 | 6 | 134.0 | 246.0 | 2.5 | 0.33 | 2.03 | 3.02 | 1.98 | 22.6 | 22324EX | 22324EXK |
| | 260 | 86 | 3 | 22324AEX | 22324AEXK | 1180000 | 1040000 | 2,700 | 3,450 | 8 | 14 | 6 | 134.0 | 246.0 | 2.5 | 0.38 | 1.77 | 2.64 | 1.73 | 22.2 | 22324AEX | 22324AEXK |
| 130 | 180 | 37 | 1.5 | 23926E | 23926EK | 284000 | 355000 | 2,700 | 3,450 | 4 | 8 | 4 | 138.5 | 171.5 | 1.5 | 0.18 | 3.66 | 5.46 | 3.58 | 2.87 | 23926E | 23926EK |
| | 200 | 52 | 2 | 23026E | 23026EK | 555000 | 660000 | 2,400 | 3,000 | 5 | 10 | 6 | 140.0 | 190.0 | 2.0 | 0.24 | 2.87 | 4.27 | 2.80 | 6.14 | 23026E | 23026EK |
| | 200 | 52 | 2 | 23026AX | 23026AXK | 560000 | 664000 | 3,150 | 4,050 | 5 | 10 | 6 | 140.0 | 190.0 | 2.0 | 0.27 | 2.50 | 3.72 | 2.44 | 6.10 | 23026AX | 23026AXK |
| | 200 | 69 | 2 | 24026EX1 | 24026EX1K30 | 710000 | 900000 | 2,400 | 3,150 | 6 | 11 | 6 | 140.0 | 190.0 | 2.0 | 0.32 | 2.14 | 3.18 | 2.09 | 7.93 | 24026EX1 | 24026EX1K30 |
| | 200 | 69 | 2 | 24026AX | 24026AXK30 | 680000 | 803000 | 2,400 | 3,150 | 6 | 11 | 6 | 140.0 | 190.0 | 2.0 | 0.33 | 2.04 | 3.04 | 2.00 | 7.77 | 24026AX | 24026AXK30 |
| | 210 | 64 | 2 | 23126EX1 | 23126EX1K | 690000 | 799000 | 2,200 | 3,000 | 5 | 9 | 6 | 140.0 | 200.0 | 2.0 | 0.28 | 2.42 | 3.61 | 2.37 | 8.60 | 23126EX1 | 23126EX1K |
| | 210 | 64 | 2 | 23126AX | 23126AXK | 705000 | 827000 | 2,500 | 3,300 | 5 | 9 | 6 | 140.0 | 200.0 | 2.0 | 0.30 | 2.25 | 3.34 | 2.20 | 8.90 | 23126AX | 23126AXK |
| | 210 | 80 | 2 | 24126EX1 | 24126EX1K30 | 840000 | 1030000 | 2,200 | 3,000 | 6 | 11 | 6 | 140.0 | 200.0 | 2.0 | 0.36 | 1.90 | 2.83 | 1.86 | 10.7 | 24126EX1 | 24126EX1K30 |
| | 210 | 80 | 2 | 24126AX | 24126AXK30 | 815000 | 918000 | 2,200 | 3,000 | 6 | 11 | 6 | 140.0 | 200.0 | 2.0 | 0.37 | 1.83 | 2.72 | 1.79 | 10.5 | 24126AX | 24126AXK30 |
| | 230 | 64 | 3 | 22226EX | 22226EXK | 910000 | 915000 | 2,200 | 2,600 | 5 | 10 | 6 | 144.0 | 216.0 | 2.5 | 0.26 | 2.55 | 3.80 | 2.50 | 11.6 | 22226EX | 22226EXK |
| | 230 | 64 | 3 | 22226AEX | 22226AEXK | 815000 | 765000 | 2,800 | 3,700 | 5 | 10 | 6 | 144.0 | 216.0 | 2.5 | 0.30 | 2.22 | 3.30 | 2.17 | 11.6 | 22226AEX | 22226AEXK |
| | 230 | 80 | 3 | 23226EX1 | 23226EX1K | 980000 | 1090000 | 2,100 | 2,800 | 6 | 13 | 6 | 144.0 | 216.0 | 2.5 | 0.33 | 2.05 | 3.05 | 2.00 | 14.2 | 23226EX1 | 23226EX1K |
| | 230 | 80 | 3 | 23226AX | 23226AXK | 965000 | 1070000 | 2,400 | 3,100 | 6 | 13 | 6 | 144.0 | 216.0 | 2.5 | 0.38 | 1.78 | 2.65 | 1.74 | 14.5 | 23226AX | 23226AXK |
| | 280 | 93 | 4 | 22326EX | 22326EXK | 1450000 | 1340000 | 1,700 | 2,500 | 8 | 16 | 6 | 148.0 | 262.0 | 3.0 | 0.33 | 2.03 | 3.02 | 1.98 | 28.4 | 22326EX | 22326EXK |
| | 280 | 93 | 4 | 22326AEX | 22326AEXK | 1370000 | 1220000 | 2,500 | 3,300 | 8 | 16 | 6 | 148.0 | 262.0 | 3.0 | 0.38 | 1.77 | 2.64 | 1.73 | 27.3 | 22326AEX | 22326AEXK |

Note: Suffix K or K30 means tapered bore (1/12 or 1/30).

# Spherical Roller Bearings

Bore Diameter: 140～150mm

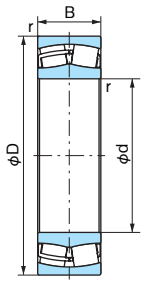


Cylindrical bore

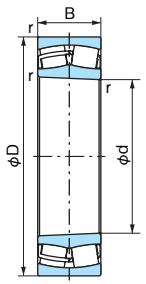


Tapered bore

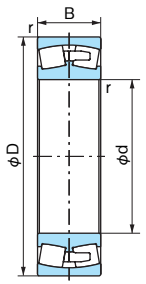


With machined brass cage

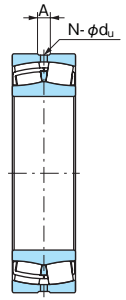


With oil holes / oil groove (W33)

1N=0.102kgf

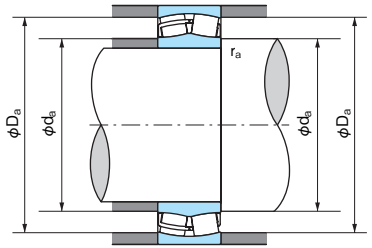


**■Dynamic equivalent radial load**

Pr=XFr+YFa

| $\frac{Fa}{Fr} \leqq e$ | | $\frac{Fa}{Fr} > e$ | |
|---|---|---|---|
| X | Y | X | Y |
| 1 | $Y_1$ | 0.67 | $Y_2$ |

Values of $Y_1$, $Y_2$ and e from table.

**■Static equivalent radial load**

$P_{or}=F_r+Y_0F_a$

Values $Y_0$ from table.

| Boundary dimensions (mm) | | | | Bearing No. | | Basic dynamic load rating Cr (N) | Basic static load rating Cor (N) | Limiting speed (min-1) | | Dimensions of lubrication holes and grooves | | | Abutment and fillet dimensions (mm) | | | Constant e | Axial load factor | | | Mass (kg) Cylindrical bore (Reference) | Bearing No. | |
|---|---|---|---|---|---|---|---|---|---|---|---|---|---|---|---|---|---|---|---|---|---|---|
| d | D | B | r (min) | Cylindrical bore | Tapered bore | | | Grease lubrication | Oil lubrication | Hole diameter du | Groove width A | Hole count N | da (min) | Da (max) | ra (max) | | $Y_1$ | $Y_2$ | $Y_0$ | | Cylindrical bore | Tapered bore |
| 140 | 190 | 37 | 1.5 | 23928AX | 23928AXK | 345000 | 466000 | 2,550 | 3,300 | 4 | 7 | 6 | 148.5 | 181.5 | 1.5 | 0.18 | 3.79 | 5.65 | 3.71 | 3.13 | 23928AX | 23928AXK |
| | 210 | 53 | 2 | 23028E | 23028EK | 585000 | 710000 | 2,400 | 2,800 | 5 | 10 | 6 | 150.0 | 200.0 | 2.0 | 0.23 | 2.98 | 4.44 | 2.91 | 6.61 | 23028E | 23028EK |
| | 210 | 53 | 2 | 23028AX | 23028AXK | 580000 | 711000 | 3,000 | 3,900 | 5 | 10 | 6 | 150.0 | 200.0 | 2.0 | 0.25 | 2.75 | 4.10 | 2.69 | 6.70 | 23028AX | 23028AXK |
| | 210 | 69 | 2 | 24028EX1 | 24028EX1K30 | 720000 | 920000 | 2,200 | 3,000 | 6 | 11 | 6 | 150.0 | 200.0 | 2.0 | 0.30 | 2.28 | 3.39 | 2.23 | 8.40 | 24028EX1 | 24028EX1K30 |
| | 210 | 69 | 2 | 24028AX | 24028AXK30 | 720000 | 819000 | 2,200 | 3,000 | 6 | 11 | 6 | 150.0 | 200.0 | 2.0 | 0.31 | 2.15 | 3.20 | 2.10 | 8.22 | 24028AX | 24028AXK30 |
| | 225 | 68 | 2.1 | 23128EX1 | 23128EX1K | 790000 | 940000 | 2,100 | 2,850 | 6 | 11 | 6 | 152.0 | 213.0 | 2.0 | 0.28 | 2.45 | 3.65 | 2.40 | 10.5 | 23128EX1 | 23128EX1K |
| | 225 | 68 | 2.1 | 23128AX | 23128AXK | 790000 | 934000 | 2,200 | 3,100 | 6 | 11 | 6 | 152.0 | 213.0 | 2.0 | 0.30 | 2.27 | 3.37 | 2.22 | 10.8 | 23128AX | 23128AXK |
| | 225 | 85 | 2.1 | 24128EX1 | 24128EX1K30 | 950000 | 1180000 | 2,100 | 2,800 | 8 | 14 | 6 | 152.0 | 213.0 | 2.0 | 0.36 | 1.87 | 2.79 | 1.83 | 13.0 | 24128EX1 | 24128EX1K30 |
| | 225 | 85 | 2.1 | 24128AX | 24128AXK30 | 930000 | 1030000 | 2,100 | 2,800 | 8 | 14 | 6 | 152.0 | 213.0 | 2.0 | 0.36 | 1.87 | 2.79 | 1.83 | 12.7 | 24128AX | 24128AXK30 |
| | 250 | 68 | 3 | 22228EX | 22228EXK | 1050000 | 1030000 | 1,900 | 2,500 | 6 | 12 | 6 | 154.0 | 236.0 | 2.5 | 0.26 | 2.60 | 3.87 | 2.54 | 13.9 | 22228EX | 22228EXK |
| | 250 | 68 | 3 | 22228AEX | 22228AEXK | 945000 | 890000 | 2,700 | 3,400 | 6 | 12 | 6 | 154.0 | 236.0 | 2.5 | 0.30 | 2.26 | 3.37 | 2.21 | 14.8 | 22228AEX | 22228AEXK |
| | 250 | 88 | 3 | 23228EX1 | 23228EX1K | 1130000 | 1290000 | 1,900 | 2,500 | 8 | 15 | 6 | 154.0 | 236.0 | 2.5 | 0.34 | 1.99 | 2.96 | 1.95 | 18.8 | 23228EX1 | 23228EX1K |
| | 250 | 88 | 3 | 23228AX | 23228AXK | 1120000 | 1270000 | 2,200 | 2,800 | 8 | 16 | 6 | 154.0 | 236.0 | 2.5 | 0.38 | 1.78 | 2.65 | 1.74 | 19.3 | 23228AX | 23228AXK |
| | 300 | 102 | 4 | 22328E | 22328EK | 1540000 | 1520000 | 1,600 | 2,200 | 10 | 22 | 6 | 158.0 | 282.0 | 3.0 | 0.37 | 1.82 | 2.72 | 1.78 | 35.9 | 22328E | 22328EK |
| | 300 | 102 | 4 | 22328A2X | 22328A2XK | 1560000 | 1540000 | 2,200 | 3,000 | 10 | 22 | 6 | 158.0 | 282.0 | 3.0 | 0.40 | 1.69 | 2.52 | 1.65 | 34.5 | 22328A2X | 22328A2XK |
| 150 | 210 | 45 | 2 | 23930AX | 23930AXK | 465000 | 622000 | 2,400 | 3,000 | 5 | 9 | 6 | 200.0 | 160.0 | 2.0 | 0.20 | 3.44 | 5.12 | 3.36 | 5.01 | 23930AX | 23930AXK |
| | 225 | 56 | 2.1 | 23030E | 23030EK | 640000 | 790000 | 1,900 | 2,500 | 5 | 11 | 6 | 162.0 | 213.0 | 2.0 | 0.22 | 3.04 | 4.53 | 2.97 | 8.01 | 23030E | 23030EK |
| | 225 | 56 | 2.1 | 23030AX | 23030AXK | 640000 | 791000 | 2,700 | 3,600 | 5 | 11 | 6 | 162.0 | 213.0 | 2.0 | 0.24 | 2.79 | 4.16 | 2.73 | 8.20 | 23030AX | 23030AXK |
| | 225 | 75 | 2.1 | 24030EX1 | 24030EX1K30 | 815000 | 1060000 | 2,100 | 2,700 | 6 | 11 | 6 | 162.0 | 213.0 | 2.0 | 0.30 | 2.23 | 3.32 | 2.18 | 10.5 | 24030EX1 | 24030EX1K |
| | 225 | 75 | 2.1 | 24030AX | 24030AXK30 | 815000 | 924000 | 2,100 | 2,700 | 6 | 11 | 6 | 162.0 | 213.0 | 2.0 | 0.32 | 2.10 | 3.13 | 2.06 | 10.4 | 24030AX | 24030AXK30 |
| | 250 | 80 | 2.1 | 23130EX1 | 23130EX1K | 1000000 | 1230000 | 1,900 | 2,500 | 6 | 13 | 6 | 162.0 | 238.0 | 2.0 | 0.30 | 2.24 | 3.34 | 2.19 | 16.2 | 23130EX1 | 23130EX1K |
| | 250 | 80 | 2.1 | 23130AX | 23130AXK | 1030000 | 1310000 | 2,100 | 2,800 | 6 | 13 | 6 | 162.0 | 238.0 | 2.0 | 0.35 | 1.95 | 2.91 | 1.91 | 16.7 | 23130AX | 23130AXK |
| | 250 | 100 | 2.1 | 24130EX1 | 24130EX1K30 | 1230000 | 1520000 | 1,900 | 2,500 | 8 | 14 | 6 | 162.0 | 238.0 | 2.0 | 0.38 | 1.77 | 2.64 | 1.73 | 19.6 | 24130EX1 | 24130EX1K30 |
| | 250 | 100 | 2.1 | 24130AX | 24130AXK30 | 1120000 | 1340000 | 1,900 | 2,500 | 8 | 14 | 6 | 162.0 | 238.0 | 2.0 | 0.38 | 1.76 | 2.62 | 1.72 | 19.5 | 24130AX | 24130AXK30 |
| | 270 | 73 | 3 | 22230EX | 22230EXK | 1200000 | 1200000 | 1,800 | 2,400 | 6 | 14 | 6 | 164.0 | 256.0 | 2.5 | 0.25 | 2.69 | 4.00 | 2.63 | 18.9 | 22230EX | 22230EXK |
| | 270 | 73 | 3 | 22230AEX | 22230AEXK | 1060000 | 1020000 | 2,400 | 3,100 | 6 | 14 | 6 | 164.0 | 256.0 | 2.5 | 0.29 | 2.30 | 3.42 | 2.25 | 18.1 | 22230AEX | 22230AEXK |
| | 270 | 96 | 3 | 23230EX1 | 23230EX1K | 1340000 | 1540000 | 1,800 | 2,400 | 8 | 15 | 6 | 164.0 | 256.0 | 2.5 | 0.34 | 1.96 | 2.93 | 1.92 | 24.2 | 23230EX1 | 23230EX1K |
| | 270 | 96 | 3 | 23230AX | 23230AXK | 1320000 | 1530000 | 1,900 | 2,700 | 8 | 15 | 6 | 164.0 | 256.0 | 2.5 | 0.40 | 1.70 | 2.53 | 1.66 | 24.8 | 23230AX | 23230AXK |
| | 320 | 108 | 4 | 22330E | 22330EK | 1770000 | 1740000 | 1,500 | 2,100 | 10 | 22 | 6 | 168.0 | 302.0 | 3.0 | 0.37 | 1.82 | 2.70 | 1.78 | 43.3 | 22330E | 22330EK |
| | 320 | 108 | 4 | 22330A2X | 22330A2XK | 1720000 | 1710000 | 2,100 | 2,800 | 10 | 22 | 6 | 168.0 | 302.0 | 3.0 | 0.40 | 1.67 | 2.49 | 1.63 | 41.5 | 22330A2X | 22330A2XK |

Note: Suffix K or K30 means tapered bore (1/12 or 1/30).

# Spherical Roller Bearings

Bore Diameter: 160～170mm

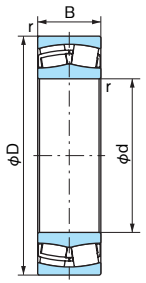


Cylindrical bore

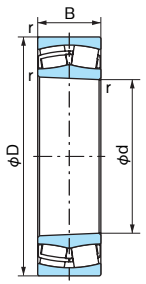


Tapered bore

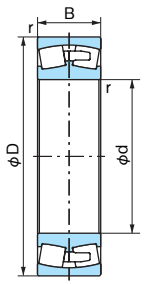


With machined brass cage

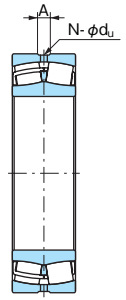


With oil holes / oil groove (W33)

1N=0.102kgf

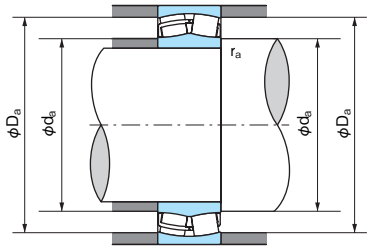


**■Dynamic equivalent radial load**

Pr=XFr+YFa

| $\frac{Fa}{Fr} \leqq e$ | | $\frac{Fa}{Fr} > e$ | |
|---|---|---|---|
| X | Y | X | Y |
| 1 | $Y_1$ | 0.67 | $Y_2$ |

Values of $Y_1$, $Y_2$ and e from table.

**■Static equivalent radial load**

$P_{or}=F_r+Y_0F_a$

Values $Y_0$ from table.

| Boundary dimensions (mm) | | | | Bearing No. | | Basic dynamic load rating Cr (N) | Basic static load rating Cor (N) | Limiting speed (min-1) | | Dimensions of lubrication holes and grooves | | | Abutment and fillet dimensions (mm) | | | Constant e | Axial load factor | | | Mass (kg) Cylindrical bore (Reference) | Bearing No. | |
|---|---|---|---|---|---|---|---|---|---|---|---|---|---|---|---|---|---|---|---|---|---|---|
| d | D | B | r (min) | Cylindrical bore | Tapered bore | | | Grease lubrication | Oil lubrication | Hole diameter du | Groove width A | Hole count N | da (min) | Da (max) | ra (max) | | Y1 | Y2 | Y0 | | Cylindrical bore | Tapered bore |
| 160 | 220 | 45 | 2 | **23932AX** | **23932AXK** | 475000 | 649000 | 2,250 | 2,800 | 5 | 10 | 6 | 170.0 | 210.0 | 2.0 | 0.19 | 3.60 | 5.37 | 3.52 | 5.29 | **23932AX** | **23932AXK** |
| | 240 | 60 | 2.1 | **23032E** | **23032EK** | 735000 | 915000 | 1,800 | 2,400 | 5 | 11 | 6 | 172.0 | 228.0 | 2.0 | 0.22 | 3.01 | 4.48 | 2.94 | 9.74 | **23032E** | **23032EK** |
| | 240 | 60 | 2.1 | **23032AX** | **23032AXK** | 735000 | 917000 | 2,500 | 3,300 | 5 | 11 | 6 | 172.0 | 228.0 | 2.0 | 0.24 | 2.79 | 4.16 | 2.73 | 9.90 | **23032AX** | **23032AXK** |
| | 240 | 80 | 2.1 | **24032EX1** | **24032EX1K30** | 950000 | 1280000 | 1,900 | 2,500 | 6 | 11 | 6 | 172.0 | 228.0 | 2.0 | 0.30 | 2.24 | 3.34 | 2.19 | 12.7 | **24032EX1** | **24032EX1K30** |
| | 240 | 80 | 2.1 | **24032AX** | **24032AXK30** | 915000 | 1110000 | 1,900 | 2,500 | 6 | 11 | 6 | 172.0 | 228.0 | 2.0 | 0.32 | 2.12 | 3.15 | 2.07 | 12.4 | **24032AX** | **24032AXK30** |
| | 270 | 86 | 2.1 | **23132EX1** | **23132EX1K** | 1180000 | 1430000 | 1,800 | 2,400 | 8 | 16 | 6 | 172.0 | 258.0 | 2.0 | 0.30 | 2.22 | 3.30 | 2.17 | 20.5 | **23132EX1** | **23132EX1K** |
| | 270 | 86 | 2.1 | **23132AX** | **23132AXK** | 1200000 | 1460000 | 1,900 | 2,500 | 8 | 16 | 6 | 172.0 | 258.0 | 2.0 | 0.34 | 1.96 | 2.91 | 1.91 | 21.2 | **23132AX** | **23132AXK** |
| | 270 | 109 | 2.1 | **24132EX1** | **24132EX1K30** | 1450000 | 1810000 | 1,800 | 2,400 | 10 | 17 | 6 | 172.0 | 258.0 | 2.0 | 0.39 | 1.74 | 2.59 | 1.70 | 25.5 | **24132EX1** | **24132EX1K30** |
| | 270 | 109 | 2.1 | **24132AX** | **24132AXK30** | 1340000 | 1610000 | 1,800 | 2,400 | 10 | 17 | 6 | 172.0 | 258.0 | 2.0 | 0.39 | 1.74 | 2.59 | 1.70 | 25.5 | **24132AX** | **24132AXK30** |
| | 290 | 80 | 3 | **22232E** | **22232EK** | 1230000 | 1330000 | 1,500 | 2,100 | 6 | 14 | 6 | 174.0 | 276.0 | 2.5 | 0.26 | 2.57 | 3.83 | 2.52 | 23.7 | **22232E** | **22232EK** |
| | 290 | 80 | 3 | **22232E2** | **22232E2K** | 1230000 | 1320000 | 1,800 | 2,400 | 6 | 14 | 6 | 174.0 | 276.0 | 2.5 | 0.28 | 2.37 | 3.53 | 2.32 | 24.0 | **22232E2** | **22232E2K** |
| | 290 | 80 | 3 | **22232A2X** | **22232A2XK** | 1210000 | 1300000 | 2,200 | 3,000 | 6 | 14 | 6 | 174.0 | 276.0 | 2.5 | 0.31 | 2.20 | 3.27 | 2.15 | 23.8 | **22232A2X** | **22232A2XK** |
| | 290 | 104 | 3 | **23232E** | **23232EK** | 1500000 | 1710000 | 1,300 | 1,800 | 10 | 22 | 6 | 174.0 | 276.0 | 2.5 | 0.37 | 1.82 | 2.71 | 1.78 | 30.4 | **23232E** | **23232EK** |
| | 290 | 104 | 3 | **23232A2X** | **23232A2XK** | 1460000 | 1650000 | 1,900 | 2,400 | 10 | 22 | 6 | 174.0 | 276.0 | 2.5 | 0.39 | 1.72 | 2.56 | 1.68 | 30.7 | **23232A2X** | **23232A2XK** |
| | 340 | 114 | 4 | **22332E** | **22332EK** | 1950000 | 1950000 | 1,400 | 1,900 | 10 | 22 | 6 | 178.0 | 322.0 | 3.0 | 0.36 | 1.85 | 2.75 | 1.81 | 51.4 | **22332E** | **22332EK** |
| 170 | 230 | 45 | 2 | **23934AX** | **23934AXK** | 490000 | 691000 | 2,100 | 2,700 | 5 | 10 | 6 | 180.0 | 220.0 | 2.0 | 0.18 | 3.78 | 5.63 | 3.70 | 5.58 | **23934AX** | **23934AXK** |
| | 260 | 67 | 2.1 | **23034E** | **23034EK** | 880000 | 1080000 | 1,600 | 2,200 | 6 | 13 | 6 | 182.0 | 248.0 | 2.0 | 0.23 | 2.89 | 4.31 | 2.83 | 13.1 | **23034E** | **23034EK** |
| | 260 | 67 | 2.1 | **23034AX** | **23034AXK** | 880000 | 1080000 | 2,400 | 3,100 | 6 | 13 | 6 | 182.0 | 248.0 | 2.0 | 0.27 | 2.51 | 3.74 | 2.45 | 13.1 | **23034AX** | **23034AXK** |
| | 260 | 90 | 2.1 | **24034EX1** | **24034EX1K30** | 1120000 | 1480000 | 1,800 | 2,400 | 8 | 14 | 6 | 182.0 | 248.0 | 2.0 | 0.32 | 2.11 | 3.15 | 2.07 | 17.3 | **24034EX1** | **24034EX1K30** |
| | 260 | 90 | 2.1 | **24034AX** | **24034AXK30** | 1030000 | 1320000 | 1,800 | 2,400 | 8 | 14 | 6 | 182.0 | 248.0 | 2.0 | 0.34 | 2.00 | 2.97 | 1.95 | 17.0 | **24034AX** | **24034AXK30** |
| | 280 | 88 | 2.1 | **23134EX1** | **23134EX1K** | 1260000 | 1530000 | 1,600 | 2,200 | 8 | 16 | 6 | 182.0 | 268.0 | 2.0 | 0.29 | 2.30 | 3.43 | 2.25 | 21.6 | **23134EX1** | **23134EX1K** |
| | 280 | 88 | 2.1 | **23134AX** | **23134AXK** | 1260000 | 1500000 | 1,800 | 2,400 | 8 | 16 | 6 | 182.0 | 268.0 | 2.0 | 0.34 | 2.01 | 3.00 | 1.97 | 22.2 | **23134AX** | **23134AXK** |
| | 280 | 109 | 2.1 | **24134AX** | **24134AXK30** | 1360000 | 1650000 | 1,600 | 2,200 | 10 | 17 | 6 | 182.0 | 268.0 | 2.0 | 0.37 | 1.82 | 2.70 | 1.78 | 26.4 | **24134AX** | **24134AXK30** |
| | 310 | 86 | 4 | **22234E** | **22234EK** | 1390000 | 1510000 | 1,400 | 1,900 | 8 | 18 | 6 | 188.0 | 292.0 | 3.0 | 0.29 | 2.33 | 3.47 | 2.28 | 30.0 | **22234E** | **22234EK** |
| | 310 | 110 | 4 | **23234E** | **23234EK** | 1720000 | 1970000 | 1,300 | 1,800 | 10 | 22 | 6 | 188.0 | 292.0 | 3.0 | 0.36 | 1.85 | 2.75 | 1.81 | 37.0 | **23234E** | **23234EK** |
| | 310 | 110 | 4 | **23234A2X** | **23234A2XK** | 1680000 | 1910000 | 1,800 | 2,250 | 10 | 22 | 6 | 188.0 | 292.0 | 3.0 | 0.39 | 1.71 | 2.54 | 1.67 | 37.6 | **23234A2X** | **23234A2XK** |
| | 360 | 120 | 4 | **22334E** | **22334EK** | 2150000 | 2200000 | 1,300 | 1,800 | 10 | 22 | 6 | 188.0 | 342.0 | 3.0 | 0.36 | 1.85 | 2.75 | 1.81 | 60.6 | **22334E** | **22334EK** |

Note: Suffix K or K30 means tapered bore (1/12 or 1/30).

# Spherical Roller Bearings

Bore Diameter: 180～200mm

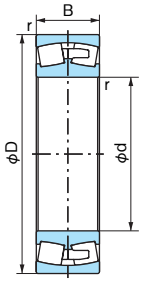


Cylindrical bore

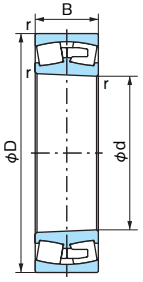


Tapered bore

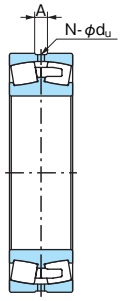


With oil holes / oil groove (W33)

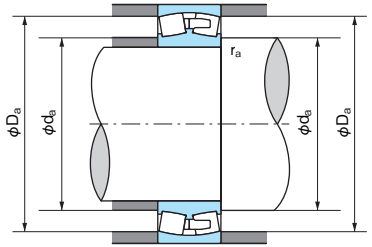


**■Dynamic equivalent radial load**

Pr=XFr+YFa

| $\frac{Fa}{Fr} \leqq e$ | | $\frac{Fa}{Fr} > e$ | |
|---|---|---|---|
| X | Y | X | Y |
| 1 | $Y_1$ | 0.67 | $Y_2$ |

Values of $Y_1$, $Y_2$ and e from table.

**■Static equivalent radial load**

$P_{or}=F_r+Y_0F_a$

Values $Y_0$ from table.

1N=0.102kgf

| Boundary dimensions (mm) | | | | Bearing No. | | Basic dynamic load rating Cr (N) | Basic static load rating Cor (N) | Limiting speed (min-1) | | Dimensions of lubrication holes and grooves | | | Abutment and fillet dimensions (mm) | | | Constant e | Axial load factor | | | Mass (kg) Cylindrical bore (Reference) | Bearing No. | |
|---|---|---|---|---|---|---|---|---|---|---|---|---|---|---|---|---|---|---|---|---|---|---|
| d | D | B | r (min) | Cylindrical bore | Tapered bore | | | Grease lubrication | Oil lubrication | Hole diameter du | Groove width A | Hole count N | da (min) | Da (max) | ra (max) | | Y1 | Y2 | Y0 | | Cylindrical bore | Tapered bore |
| 180 | 250 | 52 | 2 | 23936AX | 23936AXK | 665000 | 939000 | 1,900 | 2,500 | 6 | 10 | 6 | 190.0 | 240.0 | 2.0 | 0.19 | 3.55 | 5.29 | 3.48 | 8.10 | 23936AX | 23936AXK |
| | 280 | 74 | 2.1 | 23036E | 23036EK | 1070000 | 1330000 | 1,500 | 2,200 | 8 | 15 | 6 | 192.0 | 268.0 | 2.0 | 0.24 | 2.84 | 4.23 | 2.78 | 17.4 | 23036E | 23036EK |
| | 280 | 74 | 2.1 | 23036AX | 23036AXK | 1040000 | 1280000 | 2,200 | 2,800 | 8 | 15 | 6 | 192.0 | 268.0 | 2.0 | 0.27 | 2.47 | 3.67 | 2.41 | 17.5 | 23036AX | 23036AXK |
| | 280 | 100 | 2.1 | 24036EX1 | 24036EX1K30 | 1330000 | 1760000 | 1,600 | 2,100 | 8 | 16 | 6 | 192.0 | 268.0 | 2.0 | 0.33 | 2.04 | 3.03 | 1.99 | 22.7 | 24036EX1 | 24036EX1K30 |
| | 280 | 100 | 2.1 | 24036AX | 24036AXK30 | 1230000 | 1580000 | 1,600 | 2,100 | 8 | 16 | 6 | 192.0 | 268.0 | 2.0 | 0.32 | 2.12 | 3.15 | 2.07 | 22.5 | 24036AX | 24036AXK30 |
| | 300 | 96 | 3 | 23136E | 23136EK | 1490000 | 1810000 | 1,300 | 1,800 | 8 | 18 | 6 | 194.0 | 286.0 | 2.5 | 0.32 | 2.12 | 3.15 | 2.07 | 27.9 | 23136E | 23136EK |
| | 300 | 96 | 3 | 23136A2X | 23136A2XK | 1450000 | 1740000 | 1,800 | 2,200 | 8 | 18 | 6 | 194.0 | 286.0 | 2.5 | 0.33 | 2.04 | 3.04 | 2.00 | 28.2 | 23136A2X | 23136A2XK |
| | 300 | 118 | 3 | 24136E | 24136EK30 | 1640000 | 2040000 | 1,350 | 1,800 | 10 | 22 | 6 | 194.0 | 286.0 | 2.5 | 0.39 | 1.73 | 2.57 | 1.69 | 33.7 | 24136E | 24136EK30 |
| | 320 | 86 | 4 | 22236E | 22236EK | 1460000 | 1610000 | 1,400 | 1,900 | 8 | 18 | 6 | 198.0 | 302.0 | 3.0 | 0.28 | 2.43 | 3.61 | 2.37 | 30.9 | 22236E | 22236EK |
| | 320 | 112 | 4 | 23236E | 23236EK | 1790000 | 2100000 | 1,200 | 1,600 | 10 | 22 | 6 | 198.0 | 302.0 | 3.0 | 0.36 | 1.87 | 2.79 | 1.83 | 39.4 | 23236E | 23236EK |
| | 320 | 112 | 4 | 23236A2X | 23236A2XK | 1750000 | 2070000 | 1,800 | 2,200 | 10 | 22 | 6 | 198.0 | 302.0 | 3.0 | 0.39 | 1.75 | 2.61 | 1.71 | 39.0 | 23236A2X | 23236A2XK |
| | 380 | 126 | 4 | 22336E | 22336EK | 2380000 | 2400000 | 1,200 | 1,600 | 12 | 26 | 6 | 198.0 | 362.0 | 3.0 | 0.36 | 1.87 | 2.78 | 1.83 | 70.5 | 22336E | 22336EK |
| 190 | 260 | 52 | 2 | 23938AX | 23938AXK | 675000 | 969000 | 1,800 | 2,400 | 6 | 10 | 6 | 200.0 | 250.0 | 2.0 | 0.18 | 3.69 | 5.50 | 3.61 | 8.46 | 23938AX | 23938AXK |
| | 290 | 75 | 2.1 | 23038E | 23038EK | 1080000 | 1330000 | 1,400 | 1,900 | 6 | 14 | 6 | 202.0 | 278.0 | 2.0 | 0.25 | 2.69 | 4.00 | 2.63 | 18.4 | 23038E | 23038EK |
| | 290 | 75 | 2.1 | 23038A2X | 23038A2XK | 1080000 | 1310000 | 2,100 | 2,800 | 6 | 14 | 6 | 202.0 | 278.0 | 2.0 | 0.26 | 2.55 | 3.80 | 2.50 | 17.8 | 23038A2X | 23038A2XK |
| | 290 | 100 | 2.1 | 24038E | 24038EK30 | 1420000 | 1920000 | 1,300 | 1,800 | 8 | 18 | 6 | 202.0 | 278.0 | 2.0 | 0.34 | 1.98 | 2.94 | 1.93 | 24.6 | 24038E | 24038EK30 |
| | 320 | 104 | 3 | 23138E | 23138EK | 1720000 | 2120000 | 1,200 | 1,600 | 10 | 22 | 6 | 204.0 | 306.0 | 2.5 | 0.32 | 2.09 | 3.11 | 2.04 | 35.0 | 23138E | 23138EK |
| | 320 | 104 | 3 | 23138A2X | 23138A2XK | 1710000 | 2090000 | 1,600 | 2,100 | 10 | 22 | 6 | 204.0 | 306.0 | 2.5 | 0.34 | 1.96 | 2.92 | 1.92 | 33.5 | 23138A2X | 23138A2XK |
| | 320 | 128 | 3 | 24138E | 24138EK30 | 1900000 | 2380000 | 1,200 | 1,600 | 12 | 26 | 6 | 204.0 | 306.0 | 2.5 | 0.40 | 1.68 | 2.50 | 1.64 | 42.0 | 24138E | 24138EK30 |
| | 340 | 92 | 4 | 22238E | 22238EK | 1590000 | 1740000 | 1,300 | 1,800 | 8 | 18 | 6 | 208.0 | 322.0 | 3.0 | 0.28 | 2.39 | 3.56 | 2.34 | 37.2 | 22238E | 22238EK |
| | 340 | 120 | 4 | 23238E | 23238EK | 2070000 | 2450000 | 1,200 | 1,500 | 10 | 22 | 6 | 208.0 | 322.0 | 3.0 | 0.36 | 1.87 | 2.79 | 1.83 | 48.0 | 23238E | 23238EK |
| | 340 | 120 | 4 | 23238A2X | 23238A2XK | 2000000 | 2370000 | 1,600 | 2,100 | 10 | 22 | 6 | 208.0 | 322.0 | 3.0 | 0.39 | 1.72 | 2.56 | 1.68 | 47.5 | 23238A2X | 23238A2XK |
| | 400 | 132 | 5 | 22338E | 22338EK | 2600000 | 2670000 | 1,200 | 1,600 | 12 | 26 | 6 | 212.0 | 378.0 | 4.0 | 0.36 | 1.89 | 2.81 | 1.85 | 81.8 | 22338E | 22338EK |
| 200 | 280 | 60 | 2.1 | 23940AX | 23940AXK | 840000 | 1190000 | 1,800 | 2,200 | 6 | 11 | 6 | 212.0 | 268.0 | 2.0 | 0.20 | 3.44 | 5.13 | 3.37 | 11.9 | 23940AX | 23940AXK |
| | 310 | 82 | 2.1 | 23040E | 23040EK | 1270000 | 1560000 | 1,400 | 1,900 | 8 | 18 | 6 | 212.0 | 298.0 | 2.0 | 0.26 | 2.64 | 3.93 | 2.58 | 23.4 | 23040E | 23040EK |
| | 310 | 82 | 2.1 | 23040A2X | 23040A2XK | 1270000 | 1570000 | 1,900 | 2,500 | 8 | 18 | 6 | 212.0 | 298.0 | 2.0 | 0.28 | 2.45 | 3.64 | 2.39 | 23.3 | 23040A2X | 23040A2XK |
| | 310 | 109 | 2.1 | 24040E | 24040EK30 | 1640000 | 2230000 | 1,200 | 1,600 | 10 | 22 | 6 | 212.0 | 298.0 | 2.0 | 0.35 | 1.95 | 2.90 | 1.91 | 31.2 | 24040E | 24040EK30 |
| | 340 | 112 | 3 | 23140E | 23140EK | 1950000 | 2390000 | 1,200 | 1,500 | 10 | 22 | 6 | 214.0 | 326.0 | 2.5 | 0.33 | 2.06 | 3.06 | 2.01 | 42.7 | 23140E | 23140EK |
| | 340 | 112 | 3 | 23140A2X | 23140A2XK | 1900000 | 2330000 | 1,600 | 2,100 | 10 | 22 | 6 | 214.0 | 326.0 | 2.5 | 0.35 | 1.94 | 2.83 | 1.89 | 42.5 | 23140A2X | 23140A2XK |
| | 340 | 140 | 3 | 24140E | 24140EK30 | 2220000 | 2820000 | 1,200 | 1,500 | 12 | 26 | 6 | 214.0 | 326.0 | 2.5 | 0.41 | 1.63 | 2.43 | 1.60 | 52.9 | 24140E | 24140EK30 |
| | 360 | 98 | 4 | 22240E | 22240EK | 1810000 | 1990000 | 1,200 | 1,600 | 8 | 18 | 6 | 218.0 | 342.0 | 3.0 | 0.29 | 2.35 | 3.50 | 2.30 | 44.8 | 22240E | 22240EK |
| | 360 | 128 | 4 | 23240E | 23240EK | 2290000 | 2750000 | 1,200 | 1,500 | 12 | 26 | 6 | 218.0 | 342.0 | 3.0 | 0.37 | 1.85 | 2.75 | 1.80 | 57.7 | 23240E | 23240EK |
| | 360 | 128 | 4 | 23240A2X | 23240A2XK | 2240000 | 2680000 | 1,500 | 1,900 | 12 | 26 | 6 | 218.0 | 342.0 | 3.0 | 0.39 | 1.71 | 2.54 | 1.67 | 57.0 | 23240A2X | 23240A2XK |
| | 420 | 138 | 5 | 22340E | 22340EK | 2890000 | 3000000 | 1,200 | 1,500 | 12 | 26 | 6 | 222.0 | 398.0 | 4.0 | 0.35 | 1.93 | 2.87 | 1.88 | 93.7 | 22340E | 22340EK |

Note: Suffix K or K30 means tapered bore (1/12 or 1/30).

# Spherical Roller Bearings

Bore Diameter: 220～260mm

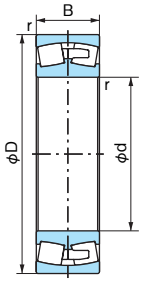


Cylindrical bore

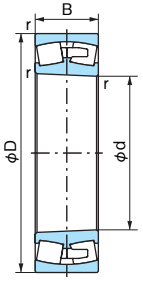


Tapered bore

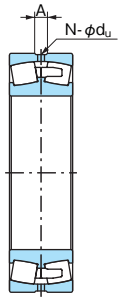


With oil holes / oil groove (W33)

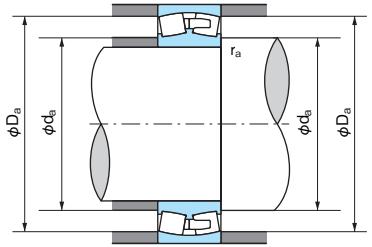


**■Dynamic equivalent radial load**

Pr=XFr+YFa

| $\frac{Fa}{Fr} \leqq e$ | | $\frac{Fa}{Fr} > e$ | |
|---|---|---|---|
| X | Y | X | Y |
| 1 | $Y_1$ | 0.67 | $Y_2$ |

Values of $Y_1$, $Y_2$ and e from table.

**■Static equivalent radial load**

$P_{or}=F_r+Y_0F_a$

Values $Y_0$ from table.

1N=0.102kgf

| Boundary dimensions (mm) | | | | Bearing No. | | Basic dynamic load rating Cr (N) | Basic static load rating Cor (N) | Limiting speed (min-1) | | Dimensions of lubrication holes and grooves | | | Abutment and fillet dimensions (mm) | | | Constant e | Axial load factor | | | Mass (kg) Cylindrical bore (Reference) | Bearing No. | |
|---|---|---|---|---|---|---|---|---|---|---|---|---|---|---|---|---|---|---|---|---|---|---|
| d | D | B | r (min) | Cylindrical bore | Tapered bore | | | Grease lubrication | Oil lubrication | Hole diameter du | Groove width A | Hole count N | da (min) | Da (max) | ra (max) | | $Y_1$ | $Y_2$ | $Y_0$ | | Cylindrical bore | Tapered bore |
| 220 | 300 | 60 | 2.1 | **23944E** | **23944EK** | 840000 | 1190000 | 1,300 | 1,800 | 6 | 12 | 6 | 232.0 | 288.0 | 2.0 | 0.18 | 3.75 | 5.59 | 3.67 | 12.6 | **23944E** | **23944EK** |
| | 340 | 90 | 3 | **23044E** | **23044EK** | 1470000 | 1880000 | 1,200 | 1,600 | 8 | 18 | 6 | 234.0 | 326.0 | 2.5 | 0.26 | 2.64 | 3.93 | 2.58 | 30.7 | **23044E** | **23044EK** |
| | 340 | 90 | 3 | **23044A2X** | **23044A2XK** | 1460000 | 1860000 | 1,800 | 2,400 | 8 | 18 | 6 | 234.0 | 326.0 | 2.5 | 0.27 | 2.51 | 3.74 | 2.45 | 30.5 | **23044A2X** | **23044A2XK** |
| | 340 | 118 | 3 | **24044E** | **24044EK30** | 1950000 | 2670000 | 1,200 | 1,500 | 10 | 22 | 6 | 234.0 | 326.0 | 2.5 | 0.34 | 1.98 | 2.95 | 1.94 | 40.3 | **24044E** | **24044EK30** |
| | 370 | 120 | 4 | **23144E** | **23144EK** | 2250000 | 2870000 | 1,000 | 1,300 | 10 | 22 | 6 | 238.0 | 352.0 | 3.0 | 0.33 | 2.06 | 3.07 | 2.02 | 54.3 | **23144E** | **23144EK** |
| | 370 | 120 | 4 | **23144A2X** | **23144A2XK** | 2210000 | 2780000 | 1,500 | 1,800 | 10 | 22 | 6 | 238.0 | 352.0 | 3.0 | 0.34 | 1.98 | 2.94 | 1.93 | 54.6 | **23144A2X** | **23144A2XK** |
| | 370 | 150 | 4 | **24144E** | **24144EK30** | 2530000 | 3250000 | 1,100 | 1,400 | 12 | 26 | 6 | 238.0 | 352.0 | 3.0 | 0.41 | 1.66 | 2.47 | 1.62 | 66.3 | **24144E** | **24144EK30** |
| | 400 | 108 | 4 | **22244E** | **22244EK** | 2140000 | 2380000 | 1,200 | 1,500 | 10 | 22 | 6 | 238.0 | 382.0 | 3.0 | 0.29 | 2.36 | 3.52 | 2.31 | 61.9 | **22244E** | **22244EK** |
| | 400 | 144 | 4 | **23244E** | **23244EK** | 2920000 | 3500000 | 1,000 | 1,200 | 12 | 26 | 6 | 238.0 | 382.0 | 3.0 | 0.37 | 1.83 | 2.72 | 1.79 | 81.4 | **23244E** | **23244EK** |
| | 460 | 145 | 5 | **22344E** | **22344EK** | 3350000 | 3600000 | 1,000 | 1,300 | 12 | 26 | 6 | 242.0 | 438.0 | 4.0 | 0.34 | 2.00 | 2.98 | 1.95 | 119 | **22344E** | **22344EK** |
| 240 | 320 | 60 | 2.1 | **23948E** | **23948EK** | 870000 | 1260000 | 1,200 | 1,600 | 6 | 12 | 6 | 252.0 | 308.0 | 2.0 | 0.17 | 3.95 | 5.87 | 3.86 | 13.7 | **23948E** | **23948EK** |
| | 360 | 92 | 3 | **23048E** | **23048EK** | 1530000 | 2000000 | 1,200 | 1,500 | 8 | 18 | 6 | 254.0 | 346.0 | 2.5 | 0.24 | 2.76 | 4.11 | 2.70 | 33.5 | **23048E** | **23048EK** |
| | 360 | 92 | 3 | **23048A2X** | **23048A2XK** | 1570000 | 2090000 | 1,600 | 2,200 | 8 | 18 | 6 | 254.0 | 346.0 | 2.5 | 0.27 | 2.53 | 3.77 | 2.47 | 33.5 | **23048A2X** | **23048A2XK** |
| | 360 | 118 | 3 | **24048E** | **24048EK30** | 1990000 | 2800000 | 1,000 | 1,300 | 10 | 22 | 6 | 254.0 | 346.0 | 2.5 | 0.32 | 2.10 | 3.13 | 2.05 | 43.3 | **24048E** | **24048EK30** |
| | 400 | 128 | 4 | **23148E** | **23148EK** | 2610000 | 3350000 | 1,000 | 1,200 | 12 | 26 | 6 | 258.0 | 382.0 | 3.0 | 0.32 | 2.13 | 3.17 | 2.08 | 66.6 | **23148E** | **23148EK** |
| | 400 | 128 | 4 | **23148A2X** | **23148A2XK** | 2540000 | 3250000 | 1,300 | 1,600 | 12 | 26 | 6 | 258.0 | 382.0 | 3.0 | 0.33 | 2.02 | 3.00 | 1.97 | 68.5 | **23148A2X** | **23148A2XK** |
| | 400 | 160 | 4 | **24148E** | **24148EK30** | 2850000 | 3700000 | 1,000 | 1,200 | 12 | 26 | 6 | 258.0 | 382.0 | 3.0 | 0.40 | 1.69 | 2.51 | 1.65 | 81.6 | **24148E** | **24148EK30** |
| | 440 | 120 | 4 | **22248E** | **22248EK** | 2630000 | 2930000 | 1,000 | 1,300 | 10 | 22 | 6 | 258.0 | 422.0 | 3.0 | 0.28 | 2.37 | 3.53 | 2.32 | 82.8 | **22248E** | **22248EK** |
| | 440 | 160 | 4 | **23248E** | **23248EK** | 3400000 | 4100000 | 945 | 1,200 | 12 | 26 | 6 | 258.0 | 422.0 | 3.0 | 0.37 | 1.80 | 2.68 | 1.76 | 109 | **23248E** | **23248EK** |
| | 500 | 155 | 5 | **22348E** | **22348EK** | 3850000 | 4100000 | 1,000 | 1,200 | 12 | 26 | 6 | 262.0 | 487.0 | 4.0 | 0.34 | 2.00 | 2.98 | 1.96 | 151 | **22348E** | **22348EK** |
| 260 | 360 | 75 | 2.1 | **23952E** | **23952EK** | 1240000 | 1780000 | 1,200 | 1,500 | 8 | 14 | 6 | 272.0 | 348.0 | 2.0 | 0.19 | 3.54 | 5.27 | 3.46 | 23.7 | **23952E** | **23952EK** |
| | 400 | 104 | 4 | **23052E** | **23052EK** | 1950000 | 2530000 | 1,100 | 1,400 | 10 | 22 | 6 | 278.0 | 382.0 | 3.0 | 0.25 | 2.66 | 3.97 | 2.61 | 48.9 | **23052E** | **23052EK** |
| | 400 | 140 | 4 | **24052E** | **24052EK30** | 2630000 | 3700000 | 940 | 1,200 | 12 | 26 | 6 | 278.0 | 382.0 | 3.0 | 0.34 | 1.98 | 2.94 | 1.93 | 65.7 | **24052E** | **24052EK30** |
| | 440 | 144 | 4 | **23152E** | **23152EK** | 3100000 | 4000000 | 900 | 1,100 | 12 | 26 | 6 | 278.0 | 422.0 | 3.0 | 0.33 | 2.06 | 3.06 | 2.01 | 92 | **23152E** | **23152EK** |
| | 440 | 180 | 4 | **24152E** | **24152EK30** | 3550000 | 4650000 | 900 | 1,100 | 15 | 32 | 6 | 278.0 | 422.0 | 3.0 | 0.42 | 1.59 | 2.37 | 1.56 | 113 | **24152E** | **24152EK30** |
| | 480 | 130 | 5 | **22252E** | **22252EK** | 3100000 | 3500000 | 1,000 | 1,200 | 12 | 26 | 6 | 282.0 | 458.0 | 4.0 | 0.28 | 2.40 | 3.57 | 2.34 | 107 | **22252E** | **22252EK** |
| | 480 | 174 | 5 | **23252E** | **23252EK** | 3950000 | 4800000 | 840 | 1,000 | 15 | 32 | 6 | 282.0 | 458.0 | 4.0 | 0.38 | 1.78 | 2.65 | 1.74 | 142 | **23252E** | **23252EK** |
| | 540 | 165 | 6 | **22352E** | **22352EK** | 4350000 | 4750000 | 900 | 1,100 | 15 | 32 | 8 | 288.0 | 512.0 | 5.0 | 0.33 | 2.04 | 3.03 | 1.99 | 187 | **22352E** | **22352EK** |

Note: Suffix K or K30 means tapered bore (1/12 or 1/30).

# Spherical Roller Bearings

Bore Diameter: 280～340mm

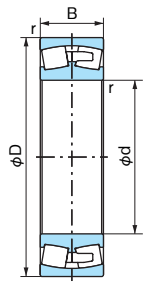


Cylindrical bore

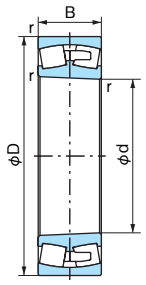


Tapered bore

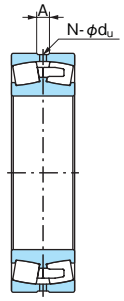


With oil holes / oil groove (W33)

1N=0.102kgf

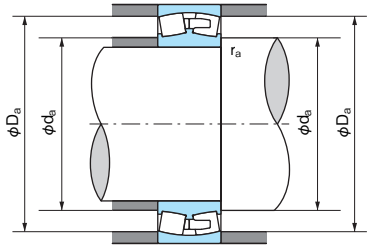


**■Dynamic equivalent radial load**

Pr=XFr+YFa

| $\frac{Fa}{Fr} \leqq e$ | | $\frac{Fa}{Fr} > e$ | |
|---|---|---|---|
| X | Y | X | Y |
| 1 | $Y_1$ | 0.67 | $Y_2$ |

Values of $Y_1$, $Y_2$ and e from table.

**■Static equivalent radial load**

$P_{or}=F_r+Y_0F_a$

Values $Y_0$ from table.

| Boundary dimensions (mm) | | | | Bearing No. | | Basic dynamic load rating Cr (N) | Basic static load rating Cor (N) | Limiting speed (min-1) | | Dimensions of lubrication holes and grooves | | | Abutment and fillet dimensions (mm) | | | Constant e | Axial load factor | | | Mass (kg) Cylindrical bore (Reference) | Bearing No. | |
|---|---|---|---|---|---|---|---|---|---|---|---|---|---|---|---|---|---|---|---|---|---|---|
| d | D | B | r (min) | Cylindrical bore | Tapered bore | | | Grease lubrication | Oil lubrication | Hole diameter du | Groove width A | Hole count N | da (min) | Da (max) | ra (max) | | Y1 | Y2 | Y0 | | Cylindrical bore | Tapered bore |
| 280 | 380 | 75 | 2.1 | 23956E | 23956EK | 1260000 | 1840000 | 1,100 | 1,400 | 8 | 14 | 6 | 292.0 | 368.0 | 2.0 | 0.18 | 3.75 | 5.59 | 3.67 | 24.9 | 23956E | 23956EK |
| | 420 | 106 | 4 | 23056E | 23056EK | 2030000 | 2720000 | 1,000 | 1,300 | 10 | 22 | 6 | 298.0 | 402.0 | 3.0 | 0.24 | 2.79 | 4.15 | 2.73 | 52.7 | 23056E | 23056EK |
| | 420 | 140 | 4 | 24056E | 24056EK30 | 2680000 | 3900000 | 900 | 1,100 | 12 | 26 | 6 | 298.0 | 402.0 | 3.0 | 0.32 | 2.09 | 3.11 | 2.04 | 69.6 | 24056E | 24056EK30 |
| | 460 | 146 | 5 | 23156E | 23156EK | 3200000 | 4200000 | 840 | 1,000 | 12 | 26 | 6 | 302.0 | 438.0 | 4.0 | 0.32 | 2.12 | 3.15 | 2.07 | 98.4 | 23156E | 23156EK |
| | 460 | 180 | 5 | 24156E | 24156EK30 | 3550000 | 4800000 | 840 | 1,000 | 15 | 32 | 6 | 302.0 | 438.0 | 4.0 | 0.39 | 1.74 | 2.59 | 1.70 | 120 | 24156E | 24156EK30 |
| | 500 | 130 | 5 | 22256E | 22256EK | 3200000 | 3700000 | 940 | 1,200 | 12 | 26 | 6 | 302.0 | 478.0 | 4.0 | 0.27 | 2.53 | 3.77 | 2.47 | 113 | 22256E | 22256EK |
| | 500 | 176 | 5 | 23256E | 23256EK | 4150000 | 5200000 | 790 | 1,000 | 15 | 32 | 6 | 302.0 | 478.0 | 4.0 | 0.36 | 1.87 | 2.79 | 1.83 | 152 | 23256E | 23256EK |
| | 580 | 175 | 6 | 22356E | 22356EK | 4950000 | 5450000 | 840 | 1,000 | 15 | 32 | 8 | 308.0 | 552.0 | 5.0 | 0.33 | 2.07 | 3.09 | 2.03 | 228 | 22356E | 22356EK |
| 300 | 420 | 90 | 3 | 23960E | 23960EK | 1740000 | 2520000 | 1,000 | 1,200 | 10 | 18 | 6 | 314.0 | 406.0 | 2.5 | 0.20 | 3.42 | 5.08 | 3.34 | 39.7 | 23960E | 23960EK |
| | 460 | 118 | 4 | 23060E | 23060EK | 2500000 | 3300000 | 940 | 1,200 | 10 | 22 | 6 | 318.0 | 442.0 | 3.0 | 0.25 | 2.71 | 4.04 | 2.65 | 72.8 | 23060E | 23060EK |
| | 460 | 160 | 4 | 24060E | 24060EK30 | 3350000 | 4850000 | 840 | 1,000 | 12 | 26 | 6 | 318.0 | 442.0 | 3.0 | 0.34 | 1.99 | 2.96 | 1.94 | 98.7 | 24060E | 24060EK30 |
| | 500 | 160 | 5 | 23160E | 23160EK | 3650000 | 4750000 | 790 | 1,000 | 12 | 26 | 6 | 322.0 | 478.0 | 4.0 | 0.33 | 2.06 | 3.06 | 2.01 | 129 | 23160E | 23160EK |
| | 500 | 200 | 5 | 24160E | 24160EK30 | 4450000 | 6100000 | 790 | 1,000 | 15 | 32 | 6 | 322.0 | 478.0 | 4.0 | 0.40 | 1.68 | 2.50 | 1.64 | 160 | 24160E | 24160EK30 |
| | 540 | 140 | 5 | 22260E | 22260EK | 3700000 | 4300000 | 900 | 1,100 | 12 | 26 | 8 | 322.0 | 518.0 | 4.0 | 0.27 | 2.49 | 3.71 | 2.43 | 144 | 22260E | 22260EK |
| | 540 | 192 | 5 | 23260E | 23260EK | 4950000 | 6250000 | 720 | 900 | 15 | 32 | 8 | 322.0 | 518.0 | 4.0 | 0.37 | 1.84 | 2.73 | 1.80 | 196 | 23260E | 23260EK |
| | 620 | 185 | 7.5 | 22360E | 22360EK | 5500000 | 6050000 | 780 | 970 | 15 | 32 | 8 | 336.0 | 584.0 | 6.0 | 0.32 | 2.09 | 3.11 | 2.04 | 279 | 22360E | 22360EK |
| 320 | 440 | 90 | 3 | 23964E | 23964EK | 1770000 | 2610000 | 940 | 1,200 | 10 | 18 | 6 | 334.0 | 426.0 | 2.5 | 0.19 | 3.58 | 5.33 | 3.50 | 41.8 | 23964E | 23964EK |
| | 480 | 121 | 4 | 23064E | 23064EK | 2590000 | 3500000 | 900 | 1,100 | 12 | 26 | 6 | 338.0 | 462.0 | 3.0 | 0.24 | 2.76 | 4.11 | 2.70 | 78.6 | 23064E | 23064EK |
| | 480 | 160 | 4 | 24064E | 24064EK30 | 3400000 | 5100000 | 790 | 1,000 | 12 | 26 | 6 | 338.0 | 462.0 | 3.0 | 0.32 | 2.09 | 3.11 | 2.04 | 104 | 24064E | 24064EK30 |
| | 540 | 176 | 5 | 23164E | 23164EK | 4350000 | 5700000 | 720 | 900 | 15 | 32 | 8 | 342.0 | 518.0 | 4.0 | 0.33 | 2.03 | 3.02 | 1.98 | 168 | 23164E | 23164EK |
| | 540 | 218 | 5 | 24164E | 24164EK30 | 5050000 | 6900000 | 720 | 900 | 15 | 35 | 4 | 342.0 | 518.0 | 4.0 | 0.41 | 1.65 | 2.46 | 1.61 | 206 | 24164E | 24164EK30 |
| | 580 | 150 | 5 | 22264E | 22264EK | 4250000 | 4900000 | 820 | 1,000 | 12 | 26 | 8 | 342.0 | 558.0 | 4.0 | 0.27 | 2.51 | 3.73 | 2.45 | 179 | 22264E | 22264EK |
| | 580 | 208 | 5 | 23264E | 23264EK | 5600000 | 7200000 | 670 | 840 | 20 | 40 | 8 | 342.0 | 558.0 | 4.0 | 0.37 | 1.83 | 2.72 | 1.79 | 244 | 23264E | 23264EK |
| 340 | 460 | 90 | 3 | 23968E | 23968EK | 1830000 | 2790000 | 900 | 1,100 | 10 | 18 | 6 | 354.0 | 446.0 | 2.5 | 0.18 | 3.80 | 5.66 | 3.72 | 44.1 | 23968E | 23968EK |
| | 520 | 133 | 5 | 23068E | 23068EK | 3150000 | 4300000 | 840 | 1,000 | 12 | 26 | 8 | 362.0 | 498.0 | 4.0 | 0.25 | 2.74 | 4.08 | 2.68 | 104 | 23068E | 23068EK |
| | 520 | 180 | 5 | 24068E | 24068EK30 | 4100000 | 6050000 | 720 | 900 | 15 | 32 | 8 | 362.0 | 498.0 | 4.0 | 0.34 | 1.98 | 2.94 | 1.93 | 141 | 24068E | 24068EK30 |
| | 580 | 190 | 5 | 23168E | 23168EK | 5150000 | 6750000 | 670 | 840 | 15 | 32 | 8 | 362.0 | 558.0 | 4.0 | 0.33 | 2.03 | 3.02 | 1.98 | 212 | 23168E | 23168EK |
| | 580 | 243 | 5 | 24168E | 24168EK30 | 6050000 | 8300000 | 670 | 840 | 20 | 40 | 8 | 362.0 | 558.0 | 4.0 | 0.42 | 1.62 | 2.42 | 1.59 | 267 | 24168E | 24168EK30 |
| | 620 | 165 | 6 | 22268E | 22268EK | 5600000 | 6850000 | 750 | 930 | 15 | 32 | 8 | 368.0 | 592.0 | 5.0 | 0.27 | 2.49 | 3.71 | 2.43 | 224 | 22268E | 22268EK |
| | 620 | 224 | 6 | 23268E | 23268EK | 6300000 | 8000000 | 600 | 790 | 20 | 40 | 8 | 368.0 | 592.0 | 5.0 | 0.37 | 1.82 | 2.70 | 1.78 | 299 | 23268E | 23268EK |

Note: Suffix K or K30 means tapered bore (1/12 or 1/30).

# Spherical Roller Bearings

Bore Diameter: 360～440mm

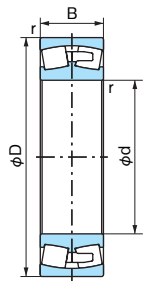


Cylindrical bore

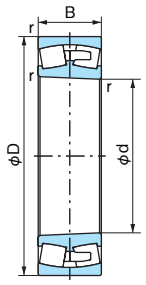


Tapered bore

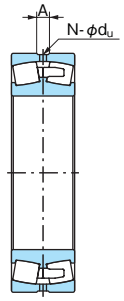


With oil holes / oil groove (W33)

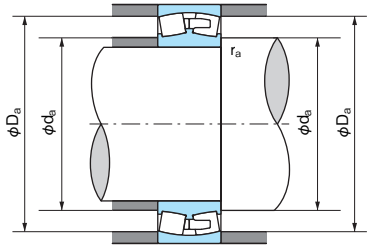


**■Dynamic equivalent radial load**

Pr=XFr+YFa

| $\frac{Fa}{Fr} \leqq e$ | | $\frac{Fa}{Fr} > e$ | |
|---|---|---|---|
| X | Y | X | Y |
| 1 | $Y_1$ | 0.67 | $Y_2$ |

Values of $Y_1$, $Y_2$ and e from table.

**■Static equivalent radial load**

$P_{or}=F_r+Y_0F_a$

Values $Y_0$ from table.

1N=0.102kgf

| Boundary dimensions (mm) | | | | Bearing No. | | Basic dynamic load rating Cr (N) | Basic static load rating Cor (N) | Limiting speed (min-1) | | Dimensions of lubrication holes and grooves | | | Abutment and fillet dimensions (mm) | | | Constant e | Axial load factor | | | Mass (kg) Cylindrical bore (Reference) | Bearing No. | |
|---|---|---|---|---|---|---|---|---|---|---|---|---|---|---|---|---|---|---|---|---|---|---|
| d | D | B | r (min) | Cylindrical bore | Tapered bore | | | Grease lubrication | Oil lubrication | Hole diameter du | Groove width A | Hole count N | da (min) | Da (max) | ra (max) | | Y1 | Y2 | Y0 | | Cylindrical bore | Tapered bore |
| 360 | 480 | 90 | 3 | **23972E** | **23972EK** | 1890000 | 2960000 | 900 | 1,100 | 10 | 18 | 6 | 374.0 | 466.0 | 2.5 | 0.17 | 4.05 | 6.03 | 3.96 | 46.2 | **23972E** | **23972EK** |
| | 540 | 134 | 5 | **23072E** | **23072EK** | 3200000 | 4500000 | 790 | 1,000 | 12 | 26 | 8 | 382.0 | 518.0 | 4.0 | 0.24 | 2.84 | 4.23 | 2.78 | 110 | **23072E** | **23072EK** |
| | 540 | 180 | 5 | **24072E** | **24072EK30** | 4250000 | 6350000 | 670 | 840 | 15 | 32 | 8 | 382.0 | 518.0 | 4.0 | 0.33 | 2.06 | 3.06 | 2.01 | 148 | **24072E** | **24072EK30** |
| | 600 | 192 | 5 | **23172E** | **23172EK** | 5350000 | 7250000 | 640 | 790 | 15 | 32 | 8 | 382.0 | 578.0 | 4.0 | 0.33 | 2.07 | 3.09 | 2.03 | 225 | **23172E** | **23172EK** |
| | 600 | 243 | 5 | **24172E** | **24172EK30** | 6250000 | 8750000 | 640 | 790 | 20 | 40 | 8 | 382.0 | 578.0 | 4.0 | 0.42 | 1.60 | 2.39 | 1.57 | 279 | **24172E** | **24172EK30** |
| | 650 | 232 | 6 | **23272E** | **23272EK** | 6950000 | 9000000 | 570 | 750 | 20 | 40 | 8 | 388.0 | 622.0 | 5.0 | 0.37 | 1.82 | 2.70 | 1.78 | 342 | **23272E** | **23272EK** |
| 380 | 520 | 106 | 4 | **23976E** | **23976EK** | 2390000 | 3650000 | 790 | 1,000 | 12 | 24 | 8 | 398.0 | 502.0 | 3.0 | 0.19 | 3.58 | 5.33 | 3.50 | 68.2 | **23976E** | **23976EK** |
| | 560 | 135 | 5 | **23076E** | **23076EK** | 3300000 | 4700000 | 750 | 940 | 12 | 26 | 8 | 402.0 | 538.0 | 4.0 | 0.23 | 2.92 | 4.35 | 2.86 | 116 | **23076E** | **23076EK** |
| | 560 | 180 | 5 | **24076E** | **24076EK30** | 4300000 | 6650000 | 670 | 840 | 15 | 32 | 8 | 402.0 | 538.0 | 4.0 | 0.31 | 2.15 | 3.20 | 2.10 | 154 | **24076E** | **24076EK30** |
| | 620 | 194 | 5 | **23176E** | **23176EK** | 5400000 | 7400000 | 600 | 750 | 15 | 32 | 8 | 402.0 | 598.0 | 4.0 | 0.32 | 2.13 | 3.17 | 2.08 | 236 | **23176E** | **23176EK** |
| | 620 | 243 | 5 | **24176E** | **24176EK30** | 6450000 | 9300000 | 600 | 750 | 20 | 40 | 8 | 402.0 | 598.0 | 4.0 | 0.40 | 1.70 | 2.53 | 1.66 | 290 | **24176E** | **24176EK30** |
| | 680 | 240 | 6 | **23276E** | **23276EK** | 7500000 | 9800000 | 540 | 720 | 20 | 40 | 8 | 408.0 | 652.0 | 5.0 | 0.36 | 1.86 | 2.77 | 1.82 | 383 | **23276E** | **23276EK** |
| 400 | 540 | 106 | 4 | **23980E** | **23980EK** | 2470000 | 3900000 | 750 | 940 | 12 | 24 | 8 | 418.0 | 522.0 | 3.0 | 0.18 | 3.75 | 5.59 | 3.67 | 71.4 | **23980E** | **23980EK** |
| | 600 | 148 | 5 | **23080E** | **23080EK** | 3900000 | 5500000 | 720 | 900 | 12 | 26 | 8 | 422.0 | 578.0 | 4.0 | 0.24 | 2.81 | 4.19 | 2.75 | 151 | **23080E** | **23080EK** |
| | 600 | 200 | 5 | **24080E** | **24080EK30** | 5000000 | 7650000 | 600 | 750 | 15 | 32 | 8 | 422.0 | 578.0 | 4.0 | 0.33 | 2.03 | 3.02 | 1.98 | 204 | **24080E** | **24080EK30** |
| | 650 | 200 | 6 | **23180E** | **23180EK** | 5750000 | 7900000 | 570 | 720 | 15 | 32 | 8 | 428.0 | 622.0 | 5.0 | 0.31 | 2.18 | 3.24 | 2.13 | 266 | **23180E** | **23180EK** |
| | 650 | 250 | 6 | **24180E** | **24180EK30** | 6900000 | 9850000 | 570 | 720 | 20 | 40 | 8 | 428.0 | 622.0 | 5.0 | 0.39 | 1.73 | 2.57 | 1.69 | 330 | **24180E** | **24180EK30** |
| | 720 | 256 | 6 | **23280E** | **23280EK** | 8500000 | 11100000 | 510 | 670 | 20 | 45 | 8 | 428.0 | 692.0 | 5.0 | 0.36 | 1.86 | 2.77 | 1.82 | 461 | **23280E** | **23280EK** |
| 420 | 560 | 106 | 4 | **23984E** | **23984EK** | 2520000 | 4000000 | 720 | 900 | 12 | 24 | 8 | 438.0 | 542.0 | 3.0 | 0.18 | 3.85 | 5.73 | 3.76 | 74.4 | **23984E** | **23984EK** |
| | 620 | 150 | 5 | **23084E** | **23084EK** | 4050000 | 5850000 | 670 | 840 | 12 | 26 | 8 | 442.0 | 598.0 | 4.0 | 0.23 | 2.92 | 4.35 | 2.86 | 158 | **23084E** | **23084EK** |
| | 620 | 200 | 5 | **24084E** | **24084EK30** | 5150000 | 8000000 | 570 | 720 | 15 | 32 | 8 | 442.0 | 598.0 | 4.0 | 0.32 | 2.09 | 3.11 | 2.04 | 212 | **24084E** | **24084EK30** |
| | 700 | 224 | 6 | **23184E** | **23184EK** | 6800000 | 9250000 | 540 | 670 | 20 | 40 | 8 | 448.0 | 672.0 | 5.0 | 0.33 | 2.06 | 3.06 | 2.01 | 354 | **23184E** | **23184EK** |
| | 700 | 280 | 6 | **24184E** | **24184EK30** | 8350000 | 12000000 | 540 | 670 | 20 | 45 | 8 | 448.0 | 672.0 | 5.0 | 0.40 | 1.68 | 2.50 | 1.64 | 437 | **24184E** | **24184EK30** |
| | 760 | 272 | 7.5 | **23284E** | **23284EK** | 9400000 | 12500000 | 490 | 640 | 20 | 45 | 8 | 456.0 | 724.0 | 6.0 | 0.37 | 1.84 | 2.74 | 1.80 | 548 | **23284E** | **23284EK** |
| 440 | 600 | 118 | 4 | **23988E** | **23988EK** | 3100000 | 4900000 | 670 | 840 | 12 | 24 | 8 | 458.0 | 582.0 | 3.0 | 0.18 | 3.66 | 5.46 | 3.58 | 101 | **23988E** | **23988EK** |
| | 650 | 157 | 6 | **23088E** | **23088EK** | 4300000 | 6250000 | 640 | 790 | 12 | 26 | 8 | 468.0 | 622.0 | 5.0 | 0.24 | 2.87 | 4.27 | 2.80 | 183 | **23088E** | **23088EK** |
| | 650 | 212 | 6 | **24088E** | **24088EK30** | 5750000 | 9000000 | 540 | 670 | 20 | 40 | 8 | 468.0 | 622.0 | 5.0 | 0.32 | 2.09 | 3.11 | 2.04 | 247 | **24088E** | **24088EK30** |
| | 720 | 226 | 6 | **23188E** | **23188EK** | 7150000 | 10000000 | 510 | 640 | 20 | 40 | 8 | 468.0 | 692.0 | 5.0 | 0.32 | 2.13 | 3.17 | 2.08 | 371 | **23188E** | **23188EK** |
| | 720 | 280 | 6 | **24188E** | **24188EK30** | 8550000 | 12700000 | 510 | 640 | 20 | 45 | 8 | 468.0 | 692.0 | 5.0 | 0.39 | 1.73 | 2.58 | 1.69 | 460 | **24188E** | **24188EK30** |
| | 790 | 280 | 7.5 | **23288E** | **23288EK** | 10000000 | 13300000 | 480 | 600 | 20 | 45 | 8 | 476.0 | 754.0 | 6.0 | 0.36 | 1.86 | 2.77 | 1.82 | 605 | **23288E** | **23288EK** |

Note: Suffix K or K30 means tapered bore (1/12 or 1/30).

# Spherical Roller Bearings

Bore Diameter : 460～600mm

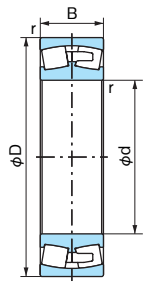


Cylindrical bore

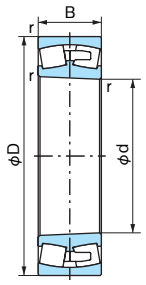


Tapered bore

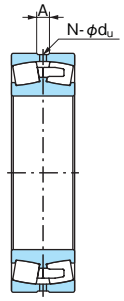


With oil holes / oil groove (W33)

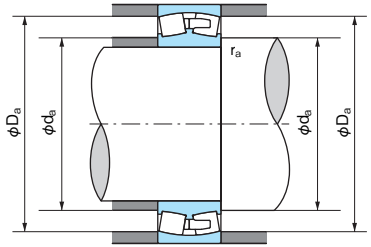


**■Dynamic equivalent radial load**

Pr=XFr+YFa

| $\frac{Fa}{Fr} \leqq e$ | | $\frac{Fa}{Fr} > e$ | |
|---|---|---|---|
| X | Y | X | Y |
| 1 | $Y_1$ | 0.67 | $Y_2$ |

Values of $Y_1$, $Y_2$ and e from table.

**■Static equivalent radial load**

$P_{or}=F_r+Y_0F_a$

Values $Y_0$ from table.

1N=0.102kgf

| Boundary dimensions (mm) | | | | Bearing No. | | Basic dynamic load rating Cr (N) | Basic static load rating Cor (N) | Limiting speed (min-1) | | Dimensions of lubrication holes and grooves | | | Abutment and fillet dimensions (mm) | | | Constant e | Axial load factor | | | Mass (kg) Cylindrical bore (Reference) | Bearing No. | |
|---|---|---|---|---|---|---|---|---|---|---|---|---|---|---|---|---|---|---|---|---|---|---|
| d | D | B | r (min) | Cylindrical bore | Tapered bore | | | Grease lubrication | Oil lubrication | Hole diameter du | Groove width A | Hole count N | da (min) | Da (max) | ra (max) | | Y1 | Y2 | Y0 | | Cylindrical bore | Tapered bore |
| 460 | 620 | 118 | 4 | **23992E** | **23992EK** | 3050000 | 4900000 | 640 | 790 | 12 | 24 | 8 | 478.0 | 602.0 | 3.0 | 0.18 | 3.85 | 5.73 | 3.76 | 105 | **23992E** | **23992EK** |
| | 680 | 163 | 6 | **23092E** | **23092EK** | 4700000 | 6850000 | 600 | 750 | 15 | 32 | 8 | 488.0 | 652.0 | 5.0 | 0.23 | 2.92 | 4.35 | 2.86 | 208 | **23092E** | **23092EK** |
| | 680 | 218 | 6 | **24092E** | **24092EK30** | 6100000 | 9650000 | 510 | 640 | 20 | 40 | 8 | 488.0 | 652.0 | 5.0 | 0.32 | 2.12 | 3.15 | 2.07 | 279 | **24092E** | **24092EK30** |
| | 760 | 240 | 7.5 | **23192E** | **23192EK** | 8000000 | 11200000 | 480 | 600 | 20 | 40 | 8 | 496.0 | 724.0 | 6.0 | 0.32 | 2.12 | 3.15 | 2.07 | 446 | **23192E** | **23192EK** |
| | 760 | 300 | 7.5 | **24192E** | **24192EK30** | 9450000 | 13900000 | 480 | 600 | 20 | 45 | 8 | 496.0 | 724.0 | 6.0 | 0.40 | 1.69 | 2.52 | 1.65 | 550 | **24192E** | **24192EK30** |
| | 830 | 296 | 7.5 | **23292E** | **23292EK** | 10600000 | 14500000 | 450 | 570 | 20 | 45 | 8 | 496.0 | 794.0 | 6.0 | 0.36 | 1.85 | 2.75 | 1.81 | 709 | **23292E** | **23292EK** |
| 480 | 650 | 128 | 5 | **23996E** | **23996EK** | 3300000 | 5450000 | 645 | 790 | 15 | 32 | 8 | 502.0 | 628.0 | 4.0 | 0.18 | 3.75 | 5.59 | 3.67 | 126 | **23996E** | **23996EK** |
| | 700 | 165 | 6 | **23096E** | **23096EK** | 4850000 | 7250000 | 570 | 720 | 15 | 32 | 8 | 508.0 | 672.0 | 5.0 | 0.22 | 3.01 | 4.48 | 2.94 | 217 | **23096E** | **23096EK** |
| | 700 | 218 | 6 | **24096E** | **24096EK30** | 6300000 | 10100000 | 510 | 640 | 20 | 40 | 8 | 508.0 | 672.0 | 5.0 | 0.31 | 2.20 | 3.27 | 2.15 | 290 | **24096E** | **24096EK30** |
| | 790 | 248 | 7.5 | **23196E** | **23196EK** | 8500000 | 12000000 | 450 | 570 | 20 | 40 | 8 | 516.0 | 754.0 | 6.0 | 0.32 | 2.12 | 3.15 | 2.07 | 495 | **23196E** | **23196EK** |
| | 790 | 308 | 7.5 | **24196E** | **24196EK30** | 9950000 | 14800000 | 450 | 570 | 20 | 45 | 8 | 516.0 | 754.0 | 6.0 | 0.39 | 1.71 | 2.54 | 1.67 | 625 | **24196E** | **24196EK30** |
| | 870 | 310 | 7.5 | **23296E** | **23296EK** | 11300000 | 15400000 | 420 | 540 | 20 | 45 | 8 | 516.0 | 834.0 | 6.0 | 0.37 | 1.82 | 2.70 | 1.78 | 820 | **23296E** | **23296EK** |
| 500 | 670 | 128 | 5 | **239/500E** | **239/500EK** | 3400000 | 5700000 | 600 | 750 | 15 | 28 | 8 | 522.0 | 648.0 | 4.0 | 0.18 | 3.85 | 5.73 | 3.76 | 130 | **239/500E** | **239/500EK** |
| | 720 | 167 | 6 | **230/500E** | **230/500EK** | 5050000 | 7650000 | 570 | 720 | 15 | 32 | 8 | 528.0 | 692.0 | 5.0 | 0.22 | 3.07 | 4.57 | 3.00 | 228 | **230/500E** | **230/500EK** |
| | 720 | 218 | 6 | **240/500E** | **240/500EK30** | 6450000 | 10500000 | 480 | 600 | 20 | 40 | 8 | 528.0 | 692.0 | 5.0 | 0.30 | 2.26 | 3.37 | 2.21 | 300 | **240/500E** | **240/500EK30** |
| | 830 | 264 | 7.5 | **231/500E** | **231/500EK** | 9300000 | 13000000 | 420 | 540 | 20 | 45 | 8 | 536.0 | 794.0 | 6.0 | 0.32 | 2.09 | 3.11 | 2.04 | 584 | **231/500E** | **231/500EK** |
| | 830 | 325 | 7.5 | **241/500E** | **241/500EK30** | 11000000 | 16200000 | 420 | 540 | 25 | 50 | 8 | 536.0 | 794.0 | 6.0 | 0.40 | 1.70 | 2.53 | 1.66 | 718 | **241/500E** | **241/500EK30** |
| | 920 | 336 | 7.5 | **232/500E** | **232/500EK** | 13200000 | 17800000 | 390 | 510 | 25 | 50 | 8 | 536.0 | 884.0 | 6.0 | 0.38 | 1.78 | 2.65 | 1.74 | 1000 | **232/500E** | **232/500EK** |
| 530 | 710 | 136 | 5 | **239/530E** | **239/530EK** | 4100000 | 6800000 | 540 | 670 | 15 | 28 | 8 | 552.0 | 688.0 | 4.0 | 0.18 | 3.85 | 5.73 | 3.76 | 156 | **239/530E** | **239/530EK** |
| | 780 | 185 | 6 | **230/530E** | **230/530EK** | 6250000 | 9450000 | 550 | 670 | 15 | 32 | 8 | 558.0 | 752.0 | 5.0 | 0.23 | 2.98 | 4.44 | 2.91 | 308 | **230/530E** | **230/530EK** |
| | 780 | 250 | 6 | **240/530E** | **240/530EK30** | 7800000 | 12500000 | 450 | 550 | 20 | 40 | 8 | 558.0 | 752.0 | 5.0 | 0.32 | 2.12 | 3.15 | 2.07 | 417 | **240/530E** | **240/530EK30** |
| | 870 | 272 | 7.5 | **231/530E** | **231/530EK** | 10200000 | 14600000 | 390 | 510 | 20 | 45 | 8 | 566.0 | 834.0 | 6.0 | 0.32 | 2.13 | 3.17 | 2.08 | 640 | **231/530E** | **231/530EK** |
| | 980 | 355 | 9.5 | **232/530E** | **232/530EK** | 15300000 | 21000000 | 330 | 450 | 25 | 60 | 8 | 574.0 | 936.0 | 8.0 | 0.37 | 1.80 | 2.69 | 1.76 | 1215 | **232/530E** | **232/530EK** |
| 560 | 750 | 140 | 5 | **239/560E** | **239/560EK** | 4250000 | 6950000 | 510 | 640 | 15 | 28 | 8 | 582.0 | 728.0 | 4.0 | 0.17 | 3.90 | 5.80 | 3.81 | 177 | **239/560E** | **239/560EK** |
| | 820 | 195 | 6 | **230/560E** | **230/560EK** | 7000000 | 10800000 | 510 | 640 | 15 | 32 | 8 | 588.0 | 792.0 | 5.0 | 0.23 | 2.95 | 4.39 | 2.89 | 359 | **230/560E** | **230/560EK** |
| | 820 | 258 | 6 | **240/560E** | **240/560EK30** | 8350000 | 13500000 | 420 | 520 | 20 | 45 | 8 | 588.0 | 792.0 | 5.0 | 0.31 | 2.21 | 3.29 | 2.16 | 468 | **240/560E** | **240/560EK30** |
| | 920 | 280 | 7.5 | **231/560E** | **231/560EK** | 11000000 | 15800000 | 360 | 480 | 20 | 45 | 8 | 596.0 | 884.0 | 6.0 | 0.31 | 2.20 | 3.27 | 2.15 | 732 | **231/560E** | **231/560EK** |
| | 1030 | 365 | 9.5 | **232/560E** | **232/560EK** | 16000000 | 22000000 | 280 | 400 | 25 | 50 | 8 | 612.0 | 992.0 | 8.0 | 0.37 | 1.82 | 2.70 | 1.78 | 1390 | **232/560E** | **232/560EK** |
| 600 | 800 | 150 | 5 | **239/600E** | **239/600EK** | 4800000 | 8050000 | 480 | 600 | 20 | 35 | 8 | 622.0 | 778.0 | 4.0 | 0.17 | 3.95 | 5.87 | 3.86 | 214 | **239/600E** | **239/600EK** |
| | 870 | 200 | 6 | **230/600E** | **230/600EK** | 7650000 | 12000000 | 480 | 600 | 15 | 32 | 8 | 628.0 | 842.0 | 5.0 | 0.22 | 3.10 | 4.62 | 3.03 | 408 | **230/600E** | **230/600EK** |
| | 870 | 272 | 6 | **240/600E** | **240/600EK30** | 9050000 | 14900000 | 390 | 490 | 20 | 45 | 8 | 628.0 | 842.0 | 5.0 | 0.31 | 2.20 | 3.27 | 2.15 | 551 | **240/600E** | **240/600EK30** |
| | 980 | 300 | 7.5 | **231/600E** | **231/600EK** | 12100000 | 17500000 | 300 | 420 | 20 | 45 | 8 | 636.0 | 944.0 | 6.0 | 0.31 | 0.22 | 3.27 | 2.15 | 887 | **231/600E** | **231/600EK** |
| | 1090 | 388 | 9.5 | **232/600E** | **232/600EK** | 17900000 | 25100000 | 240 | 360 | 25 | 50 | 8 | 654.0 | 1048 | 8.0 | 0.37 | 1.82 | 2.70 | 1.78 | 1640 | **232/600E** | **232/600EK** |

Note: Suffix K or K30 means tapered bore (1/12 or 1/30).

# Spherical Roller Bearings

Bore Diameter : 630～1,060mm

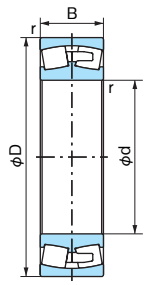


Cylindrical bore

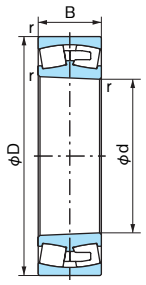


Tapered bore

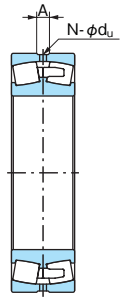


With oil holes / oil groove (W33)

1N=0.102kgf

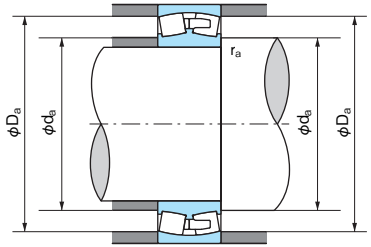


**■Dynamic equivalent radial load**

Pr=XFr+YFa

| $\frac{Fa}{Fr} \leqq e$ | | $\frac{Fa}{Fr} > e$ | |
|---|---|---|---|
| X | Y | X | Y |
| 1 | $Y_1$ | 0.67 | $Y_2$ |

Values of $Y_1$, $Y_2$ and e from table.

**■Static equivalent radial load**

$P_{or}=F_r+Y_0F_a$

Values $Y_0$ from table.

| Boundary dimensions (mm) | | | | Bearing No. | | Basic dynamic load rating Cr (N) | Basic static load rating Cor (N) | Limiting speed (min-1) | | Dimensions of lubrication holes and grooves | | | Abutment and fillet dimensions (mm) | | | Constant e | Axial load factor | | | Mass (kg) Cylindrical bore (Reference) | Bearing No. | |
|---|---|---|---|---|---|---|---|---|---|---|---|---|---|---|---|---|---|---|---|---|---|---|
| d | D | B | r (min) | Cylindrical bore | Tapered bore | | | Grease lubrication | Oil lubrication | Hole diameter du | Groove width A | Hole count N | da (min) | Da (max) | ra (max) | | Y1 | Y2 | Y0 | | Cylindrical bore | Tapered bore |
| 630 | 850 | 165 | 6 | **239/630E** | **239/630EK** | 5750000 | 9700000 | 420 | 540 | 20 | 35 | 8 | 658.0 | 822.0 | 5.0 | 0.18 | 3.71 | 5.52 | 3.62 | 273 | **239/630E** | **239/630EK** |
| | 920 | 212 | 7.5 | **230/630E** | **230/630EK** | 8350000 | 13100000 | 430 | 570 | 20 | 40 | 8 | 666.0 | 884.0 | 6.0 | 0.22 | 3.07 | 4.57 | 3.00 | 487 | **230/630E** | **230/630EK** |
| | 1030 | 315 | 7.5 | **231/630E** | **231/630EK** | 13500000 | 19800000 | 280 | 390 | 20 | 45 | 8 | 666.0 | 994.0 | 6.0 | 0.31 | 2.20 | 3.27 | 2.15 | 1070 | **231/630E** | **231/630EK** |
| 670 | 900 | 170 | 6 | **239/670E** | **239/670EK** | 6200000 | 10500000 | 390 | 510 | 20 | 35 | 8 | 698.0 | 872.0 | 5.0 | 0.17 | 3.90 | 5.80 | 3.81 | 316 | **239/670E** | **239/670EK** |
| | 980 | 230 | 7.5 | **230/670E** | **230/670EK** | 9650000 | 15300000 | 400 | 510 | 20 | 40 | 8 | 706.0 | 944.0 | 6.0 | 0.22 | 3.01 | 4.48 | 2.94 | 603 | **230/670E** | **230/670EK** |
| | 980 | 308 | 7.5 | **240/670E** | **240/670EK30** | 12000000 | 19800000 | 340 | 430 | 20 | 45 | 8 | 706.0 | 944.0 | 6.0 | 0.31 | 2.21 | 3.29 | 2.16 | 801 | **240/670E** | **240/670EK30** |
| | 1090 | 336 | 7.5 | **231/670E** | **231/670EK** | 15300000 | 23000000 | 270 | 360 | 25 | 50 | 8 | 706.0 | 1054 | 6.0 | 0.31 | 2.18 | 3.24 | 2.13 | 1260 | **231/670E** | **231/670EK** |
| 710 | 950 | 180 | 6 | **239/710E** | **239/710EK** | 6950000 | 12100000 | 360 | 480 | 20 | 35 | 8 | 738.0 | 922.0 | 5.0 | 0.17 | 3.90 | 5.80 | 3.81 | 369 | **239/710E** | **239/710EK** |
| | 1030 | 236 | 7.5 | **230/710E** | **230/710EK** | 10300000 | 16600000 | 370 | 480 | 20 | 40 | 8 | 746.0 | 994.0 | 6.0 | 0.22 | 3.10 | 4.62 | 3.03 | 676 | **230/710E** | **230/710EK** |
| | 1150 | 345 | 9.5 | **231/710E** | **231/710EK** | 16800000 | 25300000 | 250 | 330 | 25 | 50 | 8 | 754.0 | 1106 | 8.0 | 0.30 | 2.24 | 3.34 | 2.19 | 1432 | **231/710E** | **231/710EK** |
| 750 | 1000 | 185 | 6 | **239/750E** | **239/750EK** | 7500000 | 13200000 | 330 | 450 | 20 | 35 | 8 | 778.0 | 972.0 | 5.0 | 0.17 | 4.00 | 5.95 | 3.91 | 417 | **239/750E** | **239/750EK** |
| | 1090 | 250 | 7.5 | **230/750E** | **230/750EK** | 11700000 | 18900000 | 340 | 450 | 20 | 40 | 8 | 786.0 | 1054 | 6.0 | 0.22 | 3.10 | 4.62 | 3.03 | 803 | **230/750E** | **230/750EK** |
| | 1220 | 365 | 9.5 | **231/750E** | **231/750EK** | 18100000 | 27700000 | 220 | 280 | 25 | 50 | 8 | 794.0 | 1176 | 8.0 | 0.30 | 2.25 | 3.34 | 2.20 | 1710 | **231/750E** | **231/750EK** |
| 800 | 1060 | 195 | 6 | **239/800E** | **239/800EK** | 8150000 | 14500000 | 300 | 420 | 20 | 35 | 8 | 825.0 | 1032 | 5.0 | 0.17 | 4.00 | 5.96 | 3.91 | 470 | **239/800E** | **239/800EK** |
| | 1150 | 258 | 7.5 | **230/800E** | **230/800EK** | 12200000 | 20900000 | 310 | 400 | 20 | 45 | 8 | 836.0 | 1114 | 6.0 | 0.21 | 3.20 | 4.77 | 3.13 | 910 | **230/800E** | **230/800EK** |
| | 1150 | 345 | 7.5 | **240/800E** | **240/800EK30** | 15400000 | 27200000 | 300 | 370 | 25 | 50 | 8 | 836.0 | 1114 | 6.0 | 0.28 | 2.43 | 3.61 | 2.37 | 1200 | **240/800E** | **240/800EK30** |
| | 1280 | 375 | 9.5 | **231/800E** | **231/800EK** | 20000000 | 31000000 | 240 | 310 | 25 | 50 | 8 | 844.0 | 1236 | 8.0 | 0.29 | 2.32 | 3.45 | 2.26 | 1910 | **231/800E** | **231/800EK** |
| 850 | 1120 | 200 | 6 | **239/850E** | **239/850EK** | 8600000 | 15600000 | 280 | 390 | 20 | 40 | 8 | 878.0 | 1092 | 5.0 | 0.16 | 4.16 | 6.20 | 4.07 | 546 | **239/850E** | **239/850EK** |
| | 1220 | 272 | 7.5 | **230/850E** | **230/850EK** | 13600000 | 22500000 | 285 | 360 | 20 | 40 | 8 | 886.0 | 1184 | 6.0 | 0.21 | 3.20 | 4.77 | 3.13 | 1059 | **230/850E** | **230/850EK** |
| 900 | 1180 | 206 | 6 | **239/900E** | **239/900EK** | 9300000 | 17000000 | 270 | 360 | 20 | 40 | 8 | 928.0 | 1152 | 5.0 | 0.16 | 4.22 | 6.28 | 4.13 | 618 | **239/900E** | **239/900EK** |
| | 1280 | 280 | 7.5 | **230/900E** | **230/900EK** | 14600000 | 25400000 | 270 | 330 | 20 | 45 | 8 | 936.0 | 1244 | 6.0 | 0.21 | 3.27 | 4.87 | 3.20 | 1200 | **230/900E** | **230/900EK** |
| 950 | 1250 | 224 | 7.5 | **239/950E** | **239/950EK** | 10800000 | 19900000 | 250 | 330 | 20 | 40 | 8 | 986.0 | 1214 | 6.0 | 0.16 | 4.11 | 6.12 | 4.02 | 763 | **239/950E** | **239/950EK** |
| | 1360 | 300 | 7.5 | **230/950E** | **230/950EK** | 16100000 | 27200000 | 240 | 300 | 20 | 45 | 8 | 986.0 | 1324 | 6.0 | 0.21 | 3.23 | 4.82 | 3.16 | 1450 | **230/950E** | **230/950EK** |
| 1000 | 1320 | 236 | 7.5 | **239/1000E** | **239/1000EK** | 11600000 | 21300000 | 220 | 300 | 25 | 48 | 8 | 1036 | 1284 | 6.0 | 0.17 | 4.05 | 6.03 | 3.96 | 895 | **239/1000E** | **239/1000EK** |
| | 1420 | 308 | 7.5 | **230/1000E** | **230/1000EK** | 17200000 | 29700000 | 220 | 280 | 20 | 45 | 8 | 1036 | 1384 | 6.0 | 0.21 | 3.27 | 4.87 | 3.20 | 1610 | **230/1000E** | **230/1000EK** |
| 1060 | 1400 | 250 | 7.5 | **239/1060E** | **239/1060EK** | 13200000 | 24500000 | 210 | 270 | 25 | 48 | 8 | 1096 | 1364 | 6.0 | 0.17 | 4.05 | 6.03 | 3.96 | 1077 | **239/1060E** | **239/1060EK** |

Note: Suffix K or K30 means tapered bore (1/12 or 1/30).

# Thrust Ball Bearings

Tolerance ····· Page 52

## ● Design

Thrust Ball Bearings are made as single-direction and double-direction bearings. Single-direction Thrust Ball Bearings can sustain an axial load in only one direction, whereas Double-direction Thrust Ball Bearings can sustain bi-directional thrust load.

Both types of Thrust Ball Bearings cannot sustain a radial load.

Both Thrust Ball Bearings are available with aligning housing washers for mating with a housing having an aligning surface radius. Aligning seat washers with an aligning surface radius are also available for ease of design and mounting against a flat housing shoulder.

The Bearings with a polyamide cage are indicated suffix G at bearing number on package surface.

**Table 1. Thrust Ball Bearings Series**

| Type | Flat back-face type | Spherical back-face type | With aligning seat |
|---|---|---|---|
| Single-direction | 511 | — | — |
| | 512 | 532 | 532U |
| | 513 | 533 | 533U |
| | 514 | 534 | 534U |
| | 29 | — | — |
| | 39 | — | — |
| | O(1) | — | — |
| | TAM(2) | — | — |
| | TG(2) | — | — |
| Double-direction | 522 | 542 | 542U |
| | 523 | 543 | 543U |
| | 524 | 544 | 544U |

Notes: (1) Series O is inch-dimensioned.
(2) Series TAM, TG is extra-small and miniature.

**Table 2.**

| Bearing series | Bore diameter No. |
|---|---|
| 511 | 28～ |
| 512, 522, 532, 542 | 26～ |
| 513, 523, 533, 543 | 22～ |
| 514, 524, 534, 544 | 17～ |

## ● Attention

(1) Thrust Ball Bearings with flat housing washers do not permit any angular misalignment between shaft and housing, nor can they accommodate any error of angle between the support surfaces in the housing and on the shaft.

(2) They are not suitable for high speed applications. Limiting speed are indicated in the dimension table.

(3) The outside diameters of shaft washer and housing washer or center washer are the same, so clearance must be provided for the outside diameter of shaft washer or center washer by use of a step in the housing bore (See Fig.1). The outside diameter of the shaft washer or center washer of the bearings that are indicated in Table 2 are smaller than that of the housing washer, so no clearance step is required in the housing for the shaft (center) washer. See Fig.2.

(4) Bearings with polyamide cage should be used less than 120°C.

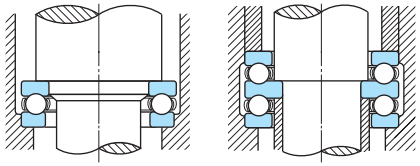

Single-direction Double-direction

**Fig 1**

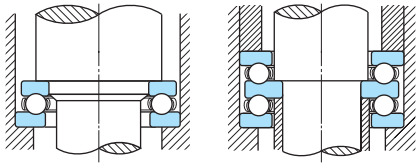

Single-direction Double-direction

**Fig 2**

## ● Cage

Standard fitting cages are shown in Table 3. If other cages are necessary, please contact NACHI.

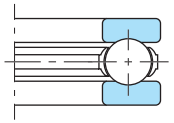

Fig 3. Polyamide

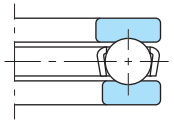

Fig 4. Pressed Steel

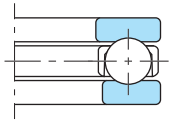

Fig 5. Machined

**Table 3. Cage of Thrust Ball Bearings**

| Series | Diameter Number | | |
|---|---|---|---|
| | Polyamide | Pressed Steel | Machined |
| 511 | 00～07 | 08～52 | 56～72 |
| 512 | 01～07 | 00, 08～28 | 30～72 |
| 513 | — | 05～20 | 22～40 |
| 514 | — | 05～14 | 15～36 |
| 522 | 02～07 | 00, 08～28 | 30～44 |
| 523 | — | 05～20 | 22～40 |
| 524 | — | 05～14 | 15～36 |
| 532 | 01～07 | 00, 08～28 | 30～72 |
| 533 | — | 05～20 | 22～40 |
| 534 | — | 05～14 | 15～36 |
| 542 | 02～07 | 08～28 | 30～44 |
| 543 | — | 05～20 | 22～24 |
| 544 | — | 05～14 | 15～20 |
| 29 | — | 00～22 | 23～28 |
| 39 | — | 05～24 | — |
| O | — | 3～30 | 32～48 |
| TAM | — | 3～8(1) | — |
| TG | — | 5～8(1) | — |

Remark: Basic load rating of dimension table are indicated in using cage of table 3.
Note: (1) Indicate bore diameter not bore number.

## ● Minimum axial load

When Thrust Ball Bearings are run at high speeds, the contact angle between the ball and the raceway in the radial plane is affected by the centrifugal force of the balls and the sliding movement between the balls and raceways are occurred. The sliding movement may cause damage as smearing. To prevent this damage, Thrust Ball Bearings must be subjected to a given load more than a minimum load from function (1) or (2).

Single-direction Thrust Ball Bearings can sustain only one direction axial load, so if bi-direction axial loads are present, Double-direction Thrust Ball Bearings must be used and preloaded by a load more than the minimum load.

In case of a vertical axis, shaft weight often exceeds the minimum load. In this case, the acting load may be decreased by the external axial load acting in the opposite direction.

$$F_{a\,min} = K \cdot n^2 \quad \cdots\cdots (1)$$

$$F_{a\,min} = \frac{C_{oa}}{1000} \quad \cdots\cdots (2)$$

Use the larger result of (1) or (2)

$F_{a\,min}$: Minimum axial load (N)

K: inimum axial factor see Table 4

n: Rotating speed ($min^{-1}$)

$C_{oa}$: Basic static load rating (N)

**Table 4. Minimum axial factor K ($\times 10^{-6}$)**

| Bore No. \ Series | 511 | 512, 522 | 513, 523 | 514, 524 |
|---|---|---|---|---|
| 00 | 1.03 | 1.55 | — | — |
| 01 | 1.26 | 1.92 | — | — |
| 02 | 1.56 | 3.36 | — | — |
| 03 | 1.84 | 4.09 | — | — |
| 04 | 3.42 | 7.33 | — | — |
| 05 | 7.19 | 13.1 | 20.4 | 43.8 |
| 06 | 9.36 | 17.2 | 33.1 | 81.4 |
| 07 | 11.2 | 32.8 | 58.3 | 128 |
| 08 | 20.4 | 49.7 | 97.2 | 221 |
| 09 | 24.6 | 57.9 | 138 | 316 |
| 10 | 29.3 | 66.8 | 211 | 440 |
| 11 | 44.6 | 133 | 326 | 656 |
| 12 | 64.7 | 160 | 375 | 956 |
| 13 | 72.0 | 179 | 428 | 1240 |
| 14 | 82.8 | 200 | 596 | 1580 |
| 15 | 94.3 | 222 | 808 | 1800 |
| 16 | 103 | 245 | 907 | 2230 |
| 17 | 116 | 359 | 1240 | 2740 |
| 18 | 187 | 528 | 1390 | 4320 |
| 20 | 363 | 850 | 1850 | 4790 |
| 22 | 423 | 1010 | 2740 | 8220 |
| 24 | 488 | 1130 | 4130 | 9980 |
| 26 | 648 | 1940 | 5140 | 16100 |
| 28 | 782 | 2150 | 6330 | 16900 |
| 30 | 886 | 2490 | 7140 | 25800 |
| 32 | 997 | 2880 | 9960 | 30000 |
| 34 | 1420 | 3940 | 11100 | 40100 |
| 36 | 1540 | 4330 | 15800 | 46330 |
| 38 | 2340 | 6290 | 23100 | — |
| 40 | 2520 | 6880 | 29700 | — |
| 44 | 3000 | 8130 | — | — |
| 48 | 4900 | 15900 | — | — |
| 52 | 5580 | 18400 | — | — |
| 56 | 9800 | 20400 | — | — |
| 60 | 14600 | 38000 | — | — |
| 64 | 16400 | 41800 | — | — |
| 68 | 18300 | 45700 | — | — |
| 72 | 20300 | 75600 | — | — |

| Bore No. \ Series | 29 | 39 |
|---|---|---|
| 00 | 1.55 | — |
| 01 | 1.92 | — |
| 02 | 2.64 | — |
| 03 | 3.30 | — |
| 04 | 3.82 | — |
| 04 1/2 | 6.41 | — |
| 05 | 7.51 | 14.2 |
| 06 | 9.72 | 28.9 |
| 07 | 20.1 | 52.3 |
| 08 | 25.1 | 81.0 |
| 09 | 31.6 | 140 |
| 10 | 46.1 | 209 |
| 11 | 54.4 | 284 |
| 12 | 60.7 | 350 |
| 13 | 86.0 | 426 |
| 14 | 99.5 | 556 |
| 15 | 114 | 704 |
| 16 | 152 | 927 |
| 17 | 172 | 1210 |
| 18 | 187 | 1580 |
| 19 | 286 | 2010 |
| 20 | 321 | 2090 |
| 21 | 346 | 2390 |
| 22 | 361 | 3220 |
| 23 | 350 | 3940 |
| 24 | 538 | 4500 |
| 25 | 498 | — |
| 26 | — | — |
| 27 | — | — |
| 28 | 794 | — |

| Bore No. \ Series | 0 |
|---|---|
| 3 | 1.34 |
| 4 | 3.62 |
| 5 | 4.65 |
| 6 | 6.40 |
| 7 | 7.76 |
| 8 | 9.24 |
| 9 | 11.6 |
| 10 | 16.5 |
| 11 | 19.0 |
| 12 | 23.0 |
| 13 | 21.0 |
| 14 | 31.3 |
| 15 | 42.1 |
| 16 | 46.9 |
| 17 | 75.0 |
| 18 | 82.8 |
| 19 | 110 |
| 20 | 121 |
| 21 | 132 |
| 22 | 176 |
| 23 | 204 |
| 24 | 223 |
| 26 | 350 |
| 28 | 395 |
| 30 | 431 |
| 32 | 580 |
| 36 | 1100 |
| 40 | 1730 |
| 44 | 2840 |
| 48 | 3690 |

# Single-direction Thrust Ball Bearings

Bore Diameter: 10～50mm

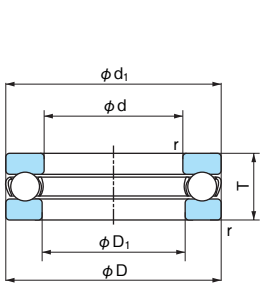


Flat back-face type

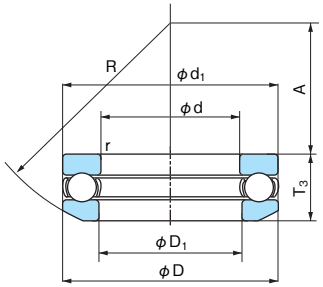


Spherical back-face type

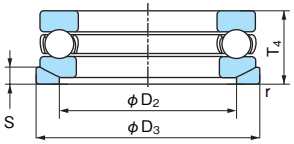


With aligning seat

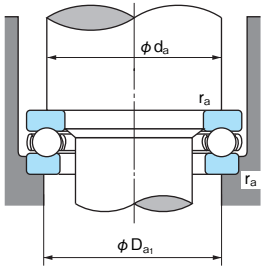


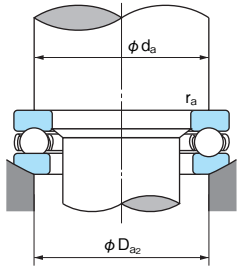


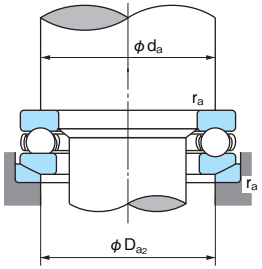


1N=0.102kgf

| Boundary dimensions (mm) | | | | | | Bearing No. | | | Basic dynamic load rating Ca (N) | Basic static load rating Coa (N) | Limiting speed (min⁻¹) | | Dimensions (mm) | | | | | | | Abutment and fillet dimensions (mm) | | | | Mass (kg) Reference | | | Bearing No. |
|---|---|---|---|---|---|---|---|---|---|---|---|---|---|---|---|---|---|---|---|---|---|---|---|---|---|---|---|
| d | D | T | $T_3$ | $T_4$ | r (min) | Flat back-face type | Spherical back-face type | With aligning seat | | | Grease lubrication | Oil lubrication | $D_1$ (min) | $d_1$ (max) | $D_2$ | $D_3$ | S | R | A | da (min) | $Da_1$ (max) | $Da_2$ (max) | ra (max) | Flat back-face type | Spherical back-face type | With aligning seat | |
| 10 | 24 | 9 | — | — | 0.3 | **51100** | — | — | 10000 | 14000 | 6800 | 10000 | 11 | 24 | — | — | — | — | — | 18 | 16 | — | 0.3 | 0.020 | — | — | **51100** |
| | 26 | 11 | 11.6 | 13 | 0.6 | **51200** | **53200** | **53200U** | 12700 | 17100 | 5900 | 8800 | 12 | 26 | 18 | 28 | 3.5 | 22 | 8.5 | 20 | 16 | 18 | 0.6 | 0.030 | 0.029 | 0.036 | **51200** |
| 12 | 26 | 9 | — | — | 0.3 | **51101** | — | — | 10300 | 15400 | 6500 | 9800 | 13 | 26 | — | — | — | — | — | 20 | 18 | — | 0.3 | 0.022 | — | — | **51101** |
| | 28 | 11 | 11.4 | 13 | 0.6 | **51201** | **53201** | **53201U** | 13200 | 19000 | 5600 | 8500 | 14 | 28 | 20 | 30 | 3.5 | 25 | 11.5 | 22 | 18 | 20 | 0.6 | 0.034 | 0.033 | 0.041 | **51201** |
| 15 | 28 | 9 | — | — | 0.3 | **51102** | — | — | 10500 | 16800 | 6200 | 9400 | 16 | 28 | — | — | — | — | — | 23 | 20 | — | 0.3 | 0.024 | — | — | **51102** |
| | 32 | 12 | 13.3 | 15 | 0.6 | **51202** | **53202** | **53202U** | 16600 | 24800 | 5100 | 7600 | 17 | 32 | 24 | 35 | 4 | 28 | 12 | 25 | 22 | 24 | 0.6 | 0.046 | 0.048 | 0.061 | **51202** |
| 17 | 30 | 9 | — | — | 0.3 | **51103** | — | — | 10800 | 18200 | 6000 | 9100 | 18 | 30 | — | — | — | — | — | 25 | 22 | — | 0.3 | 0.028 | — | — | **51103** |
| | 35 | 12 | 13.2 | 15 | 0.6 | **51203** | **53203** | **53203U** | 17100 | 27300 | 4800 | 7300 | 19 | 35 | 26 | 38 | 4 | 32 | 16 | 28 | 24 | 26 | 0.6 | 0.053 | 0.055 | 0.070 | **51203** |
| 20 | 35 | 10 | — | — | 0.3 | **51104** | — | — | 14300 | 24700 | 5300 | 8000 | 21 | 35 | — | — | — | — | — | 29 | 26 | — | 0.3 | 0.040 | — | — | **51104** |
| | 40 | 14 | 14.7 | 17 | 0.6 | **51204** | **53204** | **53204U** | 22200 | 37500 | 4200 | 6300 | 22 | 40 | 30 | 42 | 5 | 36 | 18 | 32 | 28 | 30 | 0.6 | 0.082 | 0.080 | 0.100 | **51204** |
| 25 | 42 | 11 | — | — | 0.6 | **51105** | — | — | 19500 | 37000 | 4600 | 6900 | 26 | 42 | — | — | — | — | — | 35 | 32 | — | 0.6 | 0.059 | — | — | **51105** |
| | 47 | 15 | 16.7 | 19 | 0.6 | **51205** | **53205** | **53205U** | 27800 | 50500 | 3700 | 5600 | 27 | 47 | 36 | 50 | 5.5 | 40 | 19 | 38 | 34 | 36 | 0.6 | 0.120 | 0.125 | 0.160 | **51205** |
| | 52 | 18 | 19.8 | 22 | 1 | **51305** | **53305** | **53305U** | 35500 | 61500 | 3200 | 4900 | 27 | 52 | 38 | 55 | 6 | 45 | 21 | 41 | 36 | 38 | 1 | 0.180 | 0.185 | 0.225 | **51305** |
| | 60 | 24 | 26.4 | 29 | 1 | **51405** | **53405** | **53405U** | 55500 | 89500 | 2600 | 3900 | 27 | 60 | 42 | 62 | 8 | 50 | 19 | 46 | 39 | 42 | 1 | 0.340 | 0.350 | 0.420 | **51405** |
| 30 | 47 | 11 | — | — | 0.6 | **51106** | — | — | 20400 | 42000 | 4300 | 6500 | 32 | 47 | — | — | — | — | — | 40 | 37 | — | 0.6 | 0.068 | — | — | **51106** |
| | 52 | 16 | 17.8 | 20 | 0.6 | **51206** | **53206** | **53206U** | 29300 | 58000 | 3400 | 5200 | 32 | 52 | 42 | 55 | 5.5 | 45 | 22 | 43 | 39 | 42 | 0.6 | 0.150 | 0.160 | 0.195 | **51206** |
| | 60 | 21 | 22.6 | 25 | 1 | **51306** | **53306** | **53306U** | 42500 | 78500 | 2800 | 4200 | 32 | 60 | 45 | 62 | 7 | 50 | 22 | 48 | 42 | 45 | 1 | 0.270 | 0.270 | 0.325 | **51306** |
| | 70 | 28 | 30.1 | 33 | 1 | **51406** | **53406** | **53406U** | 72500 | 126000 | 2200 | 3300 | 32 | 70 | 50 | 75 | 9 | 56 | 20 | 54 | 46 | 50 | 1 | 0.530 | 0.530 | 0.680 | **51406** |
| 35 | 52 | 12 | — | — | 0.6 | **51107** | — | — | 20400 | 44500 | 4000 | 6000 | 37 | 52 | — | — | — | — | — | 45 | 42 | — | 0.6 | 0.085 | — | — | **51107** |
| | 62 | 18 | 19.9 | 22 | 1 | **51207** | **53207** | **53207U** | 39000 | 78000 | 2900 | 4400 | 37 | 62 | 48 | 65 | 7 | 50 | 24 | 51 | 46 | 48 | 1 | 0.220 | 0.220 | 0.290 | **51207** |
| | 68 | 24 | 25.6 | 28 | 1 | **51307** | **53307** | **53307U** | 55500 | 105000 | 2400 | 3700 | 37 | 68 | 52 | 72 | 7.5 | 56 | 24 | 55 | 48 | 52 | 1 | 0.390 | 0.390 | 0.475 | **51307** |
| | 80 | 32 | 34 | 37 | 1.1 | **51407** | **53407** | **53407U** | 87000 | 155000 | 1900 | 2900 | 37 | 80 | 58 | 85 | 10 | 64 | 23 | 62 | 53 | 58 | 1 | 0.790 | 0.790 | 0.950 | **51407** |
| 40 | 60 | 13 | — | — | 0.6 | **51108** | — | — | 26900 | 63000 | 3500 | 5300 | 42 | 60 | — | — | — | — | — | 52 | 48 | — | 0.6 | 0.120 | — | — | **51108** |
| | 68 | 19 | 20.3 | 23 | 1 | **51208** | **53208** | **53208U** | 47000 | 98500 | 2700 | 4100 | 42 | 68 | 55 | 72 | 7 | 56 | 28.5 | 57 | 51 | 55 | 1 | 0.270 | 0.270 | 0.340 | **51208** |
| | 78 | 26 | 28.5 | 31 | 1 | **51308** | **53308** | **53308U** | 69000 | 135000 | 2200 | 3300 | 42 | 78 | 60 | 82 | 8.5 | 64 | 28 | 63 | 55 | 60 | 1 | 0.550 | 0.570 | 0.690 | **51308** |
| | 90 | 36 | 38.2 | 42 | 1.1 | **51408** | **53408** | **53408U** | 112000 | 205000 | 1700 | 2600 | 42 | 90 | 65 | 95 | 12 | 72 | 26 | 70 | 60 | 65 | 1 | 1.14 | 1.13 | 1.38 | **51408** |
| 45 | 65 | 14 | — | — | 0.6 | **51109** | — | — | 27800 | 69000 | 3300 | 4900 | 47 | 65 | — | — | — | — | — | 57 | 53 | — | 0.6 | 0.150 | — | — | **51109** |
| | 73 | 20 | 21.3 | 24 | 1 | **51209** | **53209** | **53209U** | 47500 | 105000 | 2600 | 3900 | 47 | 73 | 60 | 78 | 7.5 | 56 | 26 | 62 | 56 | 60 | 1 | 0.320 | 0.320 | 0.410 | **51209** |
| | 85 | 28 | 30.1 | 33 | 1 | **51309** | **53309** | **53309U** | 80000 | 163000 | 2000 | 3000 | 47 | 85 | 65 | 90 | 10 | 64 | 25 | 69 | 61 | 65 | 1 | 0.690 | 0.680 | 0.850 | **51309** |
| | 100 | 39 | 42.4 | 46 | 1.1 | **51409** | **53409** | **53409U** | 129000 | 243000 | 1600 | 2400 | 47 | 100 | 72 | 105 | 12.5 | 80 | 29 | 78 | 67 | 72 | 1 | 1.47 | 1.50 | 1.80 | **51409** |
| 50 | 70 | 14 | — | — | 0.6 | **51110** | — | — | 28800 | 75500 | 3100 | 4700 | 52 | 70 | — | — | — | — | — | 62 | 58 | — | 0.6 | 0.160 | — | — | **51110** |
| | 78 | 22 | 23.5 | 26 | 1 | **51210** | **53210** | **53210U** | 48500 | 112000 | 2400 | 3600 | 52 | 78 | 62 | 82 | 7.5 | 64 | 32.5 | 67 | 61 | 62 | 1 | 0.390 | 0.380 | 0.480 | **51210** |
| | 95 | 31 | 34.3 | 37 | 1.1 | **51310** | **53310** | **53310U** | 96500 | 202000 | 1800 | 2700 | 52 | 95 | 72 | 100 | 11 | 72 | 28 | 77 | 68 | 72 | 1 | 1.00 | 1.00 | 1.25 | **51310** |
| | 110 | 43 | 45.6 | 50 | 1.5 | **51410** | **53410** | **53410U** | 148000 | 283000 | 1400 | 2100 | 52 | 110 | 80 | 115 | 14 | 90 | 35 | 86 | 74 | 80 | 1.5 | 1.99 | 1.97 | 2.40 | **51410** |

# Single-direction Thrust Ball Bearings

Bore Diameter: 55～100mm

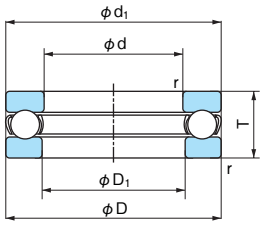


Flat back-face type

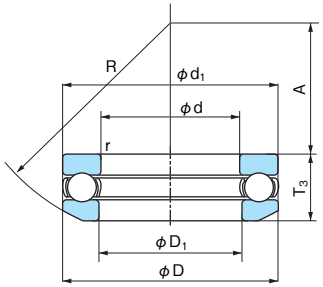


Spherical back-face type

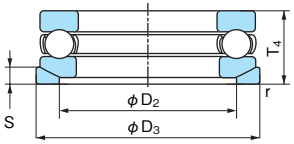


With aligning seat

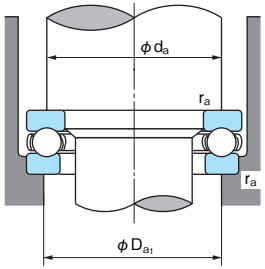


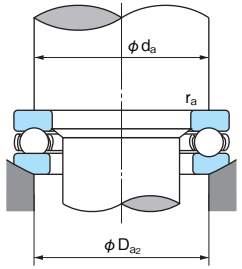


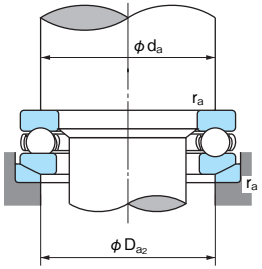


1N=0.102kgf

| Boundary dimensions (mm) | | | | | | Bearing No. | | | Basic dynamic load rating Ca (N) | Basic static load rating Coa (N) | Limiting speed (min⁻¹) | | Dimensions (mm) | | | | | | | Abutment and fillet dimensions (mm) | | | | Mass (kg) Reference | | | Bearing No. |
|---|---|---|---|---|---|---|---|---|---|---|---|---|---|---|---|---|---|---|---|---|---|---|---|---|---|---|---|
| d | D | T | $T_3$ | $T_4$ | r (min) | Flat back-face type | Spherical back-face type | With aligning seat | | | Grease lubrication | Oil lubrication | $D_1$ (min) | $d_1$ (max) | $D_2$ | $D_3$ | S | R | A | da (min) | $Da_1$ (max) | $Da_2$ (max) | ra (max) | Flat back-face type | Spherical back-face type | With aligning seat | |
| 55 | 78 | 16 | — | — | 0.6 | **51111** | — | — | 35000 | 93000 | 2800 | 4200 | 57 | 78 | — | — | — | — | — | 69 | 64 | — | 0.6 | 0.240 | — | — | **51111** |
| | 90 | 25 | 27.3 | 30 | 1 | **51211** | **53211** | **53211U** | 69500 | 159000 | 2100 | 3100 | 57 | 90 | 72 | 95 | 9 | 72 | 35 | 76 | 69 | 72 | 1 | 0.610 | 0.620 | 0.800 | **51211** |
| | 105 | 35 | 39.3 | 42 | 1.1 | **51311** | **53311** | **53311U** | 120000 | 246000 | 1600 | 2400 | 57 | 105 | 80 | 110 | 11.5 | 80 | 30 | 85 | 75 | 80 | 1 | 1.34 | 1.40 | 1.70 | **51311** |
| | 120 | 48 | 50.5 | 55 | 1.5 | **51411** | **53411** | **53411U** | 178000 | 360000 | 1300 | 1900 | 57 | 120 | 88 | 125 | 15.5 | 90 | 28 | 94 | 81 | 88 | 1.5 | 2.64 | 2.55 | 3.70 | **51411** |
| 60 | 85 | 17 | — | — | 1 | **51112** | — | — | 41500 | 113000 | 2600 | 3900 | 62 | 85 | — | — | — | — | — | 75 | 70 | — | 1 | 0.290 | — | — | **51112** |
| | 95 | 26 | 28 | 31 | 1 | **51212** | **53212** | **53212U** | 73500 | 179000 | 2000 | 3000 | 62 | 95 | 78 | 100 | 9 | 72 | 32.5 | 81 | 74 | 78 | 1 | 0.690 | 0.690 | 0.850 | **51212** |
| | 110 | 35 | 38.3 | 42 | 1.1 | **51312** | **53312** | **53312U** | 123000 | 267000 | 1600 | 2400 | 62 | 110 | 85 | 115 | 11.5 | 90 | 41 | 90 | 80 | 85 | 1 | 1.43 | 1.45 | 1.75 | **51312** |
| | 130 | 51 | 54 | 58 | 1.5 | **51412** | **53412** | **53412U** | 213000 | 435000 | 1200 | 1800 | 62 | 130 | 95 | 135 | 16 | 100 | 34 | 102 | 88 | 95 | 1.5 | 3.30 | 3.25 | 3.85 | **51412** |
| 65 | 90 | 18 | — | — | 1 | **51113** | — | — | 41500 | 117000 | 2400 | 3700 | 67 | 90 | — | — | — | — | — | 80 | 75 | — | 1 | 0.340 | — | — | **51113** |
| | 100 | 27 | 28.7 | 32 | 1 | **51213** | **53213** | **53213U** | 75000 | 189000 | 1900 | 2800 | 67 | 100 | 82 | 105 | 9 | 80 | 40 | 86 | 79 | 82 | 1 | 0.770 | 0.770 | 0.940 | **51213** |
| | 115 | 36 | 39.4 | 43 | 1.1 | **51313** | **53313** | **53313U** | 127000 | 287000 | 1500 | 2300 | 67 | 115 | 90 | 120 | 12.5 | 90 | 38.5 | 95 | 85 | 90 | 1 | 1.57 | 1.60 | 1.95 | **51313** |
| | 140 | 56 | 60.2 | 65 | 2 | **51413** | **53413** | **53413U** | 231000 | 495000 | 1100 | 1600 | 68 | 140 | 100 | 145 | 17.5 | 112 | 40 | 110 | 95 | 100 | 2 | 4.18 | 4.17 | 4.95 | **51413** |
| 70 | 95 | 18 | — | — | 1 | **51114** | — | — | 43000 | 127000 | 2400 | 3600 | 72 | 95 | — | — | — | — | — | 85 | 80 | — | 1 | 0.360 | — | — | **51114** |
| | 105 | 27 | 28.8 | 32 | 1 | **51214** | **53214** | **53214U** | 76000 | 199000 | 1800 | 2800 | 72 | 105 | 88 | 110 | 9 | 80 | 38 | 91 | 84 | 88 | 1 | 0.810 | 0.800 | 0.980 | **51214** |
| | 125 | 40 | 44.2 | 48 | 1.1 | **51314** | **53314** | **53314U** | 148000 | 340000 | 1400 | 2100 | 72 | 125 | 98 | 130 | 13 | 100 | 43 | 103 | 92 | 98 | 1 | 2.06 | 2.15 | 2.55 | **51314** |
| | 150 | 60 | 63.6 | 69 | 2 | **51414** | **53414** | **53414U** | 250000 | 555000 | 1000 | 1500 | 73 | 150 | 110 | 155 | 19.5 | 112 | 34 | 118 | 102 | 110 | 2 | 5.11 | 4.94 | 5.93 | **51414** |
| 75 | 100 | 19 | — | — | 1 | **51115** | — | — | 44500 | 136000 | 2200 | 3400 | 77 | 100 | — | — | — | — | — | 90 | 85 | — | 1 | 0.420 | — | — | **51115** |
| | 110 | 27 | 28.3 | 32 | 1 | **51215** | **53215** | **53215U** | 77500 | 209000 | 1800 | 2700 | 77 | 110 | 92 | 115 | 9.5 | 90 | 49 | 96 | 89 | 92 | 1 | 0.860 | 0.840 | 1.05 | **51215** |
| | 135 | 44 | 48.1 | 52 | 1.5 | **51315** | **53315** | **53315U** | 170000 | 395000 | 1200 | 1900 | 77 | 135 | 105 | 140 | 15 | 100 | 37 | 111 | 99 | 105 | 1.5 | 2.68 | 2.70 | 3.25 | **51315** |
| | 160 | 65 | 69 | 75 | 2 | **51415** | **53415** | **53415U** | 252000 | 560000 | 950 | 1400 | 78 | 160 | 115 | 165 | 21 | 125 | 42 | 126 | 109 | 115 | 2 | 6.35 | 6.25 | 7.60 | **51415** |
| 80 | 105 | 19 | — | — | 1 | **51116** | — | — | 44500 | 141000 | 2200 | 3300 | 82 | 105 | — | — | — | — | — | 95 | 90 | — | 1 | 0.430 | — | — | **51116** |
| | 115 | 28 | 29.5 | 33 | 1 | **51216** | **53216** | **53216U** | 78500 | 219000 | 1700 | 2600 | 82 | 115 | 98 | 120 | 10 | 90 | 46 | 101 | 94 | 98 | 1 | 0.950 | 0.930 | 1.16 | **51216** |
| | 140 | 44 | 47.6 | 52 | 1.5 | **51316** | **53316** | **53316U** | 176000 | 425000 | 1200 | 1800 | 82 | 140 | 110 | 145 | 15 | 112 | 50 | 116 | 104 | 110 | 1.5 | 2.82 | 2.85 | 3.45 | **51316** |
| | 170 | 68 | 72.2 | 78 | 2.1 | **51416** | **53416** | **53416U** | 270000 | 620000 | 900 | 1300 | 83 | 170 | 125 | 175 | 22 | 125 | 36 | 134 | 116 | 125 | 2 | 7.97 | 7.83 | 9.14 | **51416** |
| 85 | 110 | 19 | — | — | 1 | **51117** | — | — | 46000 | 150000 | 2100 | 3200 | 87 | 110 | — | — | — | — | — | 100 | 95 | — | 1 | 0.460 | — | — | **51117** |
| | 125 | 31 | 33.1 | 37 | 1 | **51217** | **53217** | **53217U** | 95500 | 264000 | 1600 | 2400 | 88 | 125 | 105 | 130 | 11 | 100 | 52 | 109 | 101 | 105 | 1 | 1.29 | 1.29 | 1.60 | **51217** |
| | 150 | 49 | 53.1 | 58 | 1.5 | **51317** | **53317** | **53317U** | 206000 | 490000 | 1100 | 1700 | 88 | 150 | 115 | 155 | 17.5 | 112 | 43 | 124 | 111 | 115 | 1.5 | 3.66 | 3.65 | 4.45 | **51317** |
| | 180 | 72 | 77 | 83 | 2.1 | **51417** | **53417** | **53417U** | 288000 | 685000 | 850 | 1200 | 88 | 177 | 130 | 185 | 23 | 140 | 47 | 142 | 123 | 130 | 2 | 9.30 | 9.20 | 10.9 | **51417** |
| 90 | 120 | 22 | — | — | 1 | **51118** | — | — | 59500 | 190000 | 1900 | 2900 | 92 | 120 | — | — | — | — | — | 108 | 102 | — | 1 | 0.680 | — | — | **51118** |
| | 135 | 35 | 38.5 | 42 | 1.1 | **51218** | **53218** | **53218U** | 116000 | 325000 | 1400 | 2100 | 93 | 135 | 110 | 140 | 13.5 | 100 | 45 | 117 | 108 | 110 | 1 | 1.77 | 1.78 | 2.22 | **51218** |
| | 155 | 50 | 54.6 | 59 | 1.5 | **51318** | **53318** | **53318U** | 213000 | 525000 | 1100 | 1600 | 93 | 155 | 120 | 160 | 18 | 112 | 40 | 129 | 116 | 120 | 1.5 | 3.88 | 3.84 | 4.70 | **51318** |
| | 190 | 77 | 81.2 | 88 | 2.1 | **51418** | **53418** | **53418U** | 305000 | 750000 | 790 | 1100 | 93 | 187 | 140 | 195 | 25.5 | 140 | 40 | 150 | 130 | 140 | 2 | 11.0 | 10.7 | 12.6 | **51418** |
| 100 | 135 | 25 | — | — | 1 | **51120** | — | — | 85000 | 268000 | 1700 | 2500 | 102 | 135 | — | — | — | — | — | 121 | 114 | — | 1 | 0.990 | — | — | **51120** |
| | 150 | 38 | 40.9 | 45 | 1.1 | **51220** | **53220** | **53220U** | 146000 | 410000 | 1300 | 1900 | 103 | 150 | 125 | 155 | 14 | 112 | 52 | 130 | 120 | 125 | 1 | 2.36 | 2.36 | 2.87 | **51220** |
| | 170 | 55 | 59.2 | 64 | 1.5 | **51320** | **53320** | **53320U** | 236000 | 595000 | 1000 | 1500 | 103 | 170 | 135 | 175 | 18 | 125 | 46 | 142 | 128 | 135 | 1.5 | 5.11 | 5.12 | 6.10 | **51320** |
| | 210 | 85 | 90 | 98 | 3 | **51420** | **53420** | **53420U** | 345000 | 895000 | 710 | 1000 | 103 | 205 | 155 | 220 | 27 | 160 | 50 | 166 | 144 | 155 | 2.5 | 14.7 | 14.5 | 17.2 | **51420** |

# Single-direction Thrust Ball Bearings

Bore Diameter: 110～190mm

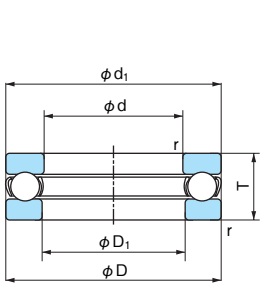


Flat back-face type

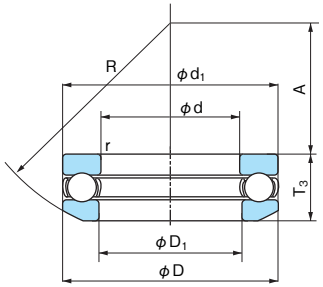


Spherical back-face type

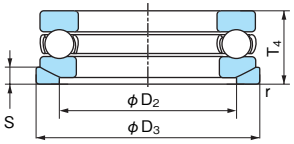


With aligning seat

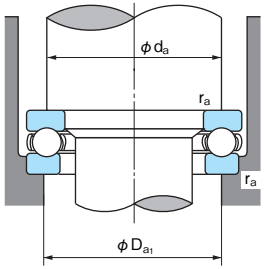


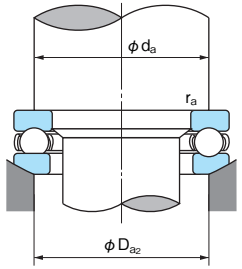


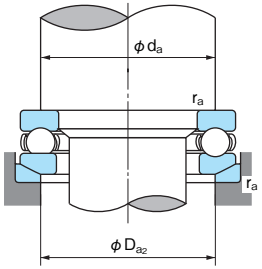


1N=0.102kgf

| Boundary dimensions (mm) | | | | | | Bearing No. | | | Basic dynamic load rating | Basic static load rating | Limiting speed (min⁻¹) | | Dimensions (mm) | | | | | | | Abutment and fillet dimensions (mm) | | | | Mass (kg) Reference | | | Bearing No. |
|---|---|---|---|---|---|---|---|---|---|---|---|---|---|---|---|---|---|---|---|---|---|---|---|---|---|---|---|
| d | D | T | $T_3$ | $T_4$ | r (min) | Flat back-face type | Spherical back-face type | With aligning seat | Ca (N) | Coa (N) | Grease lubrication | Oil lubrication | $D_1$ (min) | $d_1$ (max) | $D_2$ | $D_3$ | S | R | A | da (min) | $Da_1$ (max) | $Da_2$ (max) | ra (max) | Flat back-face type | Spherical back-face type | With aligning seat | |
| 110 | 145 | 25 | — | — | 1 | **51122** | — | — | 87000 | 288000 | 1600 | 2400 | 112 | 145 | — | — | — | — | — | 131 | 124 | — | 1 | 1.08 | — | — | **51122** |
| | 160 | 38 | 40.2 | 45 | 1.1 | **51222** | **53222** | **53222U** | 152000 | 450000 | 1200 | 1900 | 113 | 160 | 135 | 165 | 14 | 125 | 65 | 140 | 130 | 135 | 1 | 2.57 | 2.53 | 3.00 | **51222** |
| | 190 | 63 | 67.2 | 72 | 2 | **51322** | **53322** | **53322U** | 267000 | 705000 | 880 | 1300 | 113 | 187 | 150 | 195 | 20.5 | 140 | 51 | 158 | 142 | 150 | 2 | 7.73 | 7.66 | 8.96 | **51322** |
| | 230 | 95 | 99.7 | 109 | 3 | **51422** | **53422** | **53422U** | 435000 | 1240000 | 640 | 960 | 113 | 225 | 170 | 240 | 29 | 180 | 59 | 182 | 158 | 170 | 2.5 | 19.8 | 19.4 | 22.9 | **51422** |
| 120 | 155 | 25 | — | — | 1 | **51124** | — | — | 89000 | 305000 | 1600 | 2400 | 122 | 155 | — | — | — | — | — | 141 | 134 | — | 1 | 1.16 | — | — | **51124** |
| | 170 | 39 | 40.8 | 46 | 1.1 | **51224** | **53224** | **53224U** | 154000 | 470000 | 1200 | 1800 | 123 | 170 | 145 | 175 | 15 | 125 | 61 | 150 | 140 | 145 | 1 | 2.86 | 2.76 | 3.40 | **51224** |
| | 210 | 70 | 74.1 | 80 | 2.1 | **51324** | **53324** | **53324U** | 310000 | 870000 | 790 | 1100 | 123 | 205 | 165 | 220 | 22 | 160 | 63 | 174 | 156 | 165 | 2 | 10.6 | 10.4 | 12.4 | **51324** |
| | 250 | 102 | 107.3 | 118 | 4 | **51424** | **53424** | **53424U** | 455000 | 1340000 | 580 | 880 | 123 | 245 | 185 | 260 | 32 | 200 | 70 | 198 | 172 | 185 | 3 | 25.0 | 24.6 | 29.2 | **51424** |
| 130 | 170 | 30 | — | — | 1 | **51126** | — | — | 104000 | 350000 | 1300 | 2000 | 132 | 170 | — | — | — | — | — | 154 | 145 | — | 1 | 1.87 | — | — | **51126** |
| | 190 | 45 | 47.9 | 53 | 1.5 | **51226** | **53226** | **53226U** | 203000 | 620000 | 1000 | 1500 | 133 | 187 | 160 | 195 | 17 | 140 | 67 | 166 | 154 | 160 | 1.5 | 4.10 | 4.03 | 4.91 | **51226** |
| | 225 | 75 | 80.3 | 86 | 2.1 | **51326** | **53326** | **53326U** | 330000 | 960000 | 730 | 1100 | 134 | 220 | 177 | 235 | 26 | 160 | 53 | 187 | 168 | 177 | 2 | 12.7 | 12.6 | 15.2 | **51326** |
| | 270 | 110 | 115.2 | 128 | 4 | **51426** | **53426** | **53426U** | 555000 | 1750000 | 540 | 810 | 134 | 265 | 200 | 280 | 38 | 200 | 58 | 214 | 186 | 200 | 3 | 31.4 | 30.4 | 36.7 | **51426** |
| 140 | 180 | 31 | — | — | 1 | **51128** | — | — | 107000 | 375000 | 1300 | 1900 | 142 | 178 | — | — | — | — | — | 164 | 156 | — | 1 | 2.03 | — | — | **51128** |
| | 200 | 46 | 48.6 | 55 | 1.5 | **51228** | **53228** | **53228U** | 205000 | 650000 | 1000 | 1500 | 143 | 197 | 170 | 210 | 17 | 160 | 87 | 176 | 164 | 170 | 1.5 | 4.47 | 4.40 | 5.61 | **51228** |
| | 240 | 80 | 84.9 | 92 | 2.1 | **51328** | **53328** | **53328U** | 350000 | 1050000 | 680 | 1000 | 144 | 235 | 190 | 250 | 26 | 180 | 68 | 200 | 180 | 190 | 2 | 15.5 | 15.3 | 18.2 | **51328** |
| | 280 | 112 | 117 | 131 | 4 | **51428** | **53428** | **53428U** | 545000 | 1750000 | 520 | 780 | 144 | 275 | 206 | 290 | 38 | 225 | 83 | 224 | 196 | 206 | 3 | 33.9 | 32.9 | 39.9 | **51428** |
| 150 | 190 | 31 | — | — | 1 | **51130** | — | — | 109000 | 400000 | 1200 | 1900 | 152 | 188 | — | — | — | — | — | 174 | 166 | — | 1 | 2.16 | — | — | **51130** |
| | 215 | 50 | 53.3 | 60 | 1.5 | **51230** | **53230** | **53230U** | 213000 | 650000 | 940 | 1400 | 153 | 212 | 180 | 225 | 20.5 | 160 | 79 | 189 | 176 | 180 | 1.5 | 5.74 | 5.60 | 7.28 | **51230** |
| | 250 | 80 | 83.7 | 92 | 2.1 | **51330** | **53330** | **53330U** | 360000 | 1130000 | 670 | 1000 | 154 | 245 | 200 | 260 | 26 | 200 | 89.5 | 210 | 190 | 200 | 2 | 16.3 | 16.0 | 19.1 | **51330** |
| | 300 | 120 | 125.9 | 140 | 4 | **51430** | **53430** | **53430U** | 615000 | 2010000 | 480 | 720 | 154 | 295 | 225 | 310 | 41 | 225 | 69 | 240 | 210 | 225 | 3 | 41.6 | 40.5 | 48.5 | **51430** |
| 160 | 200 | 31 | — | — | 1 | **51132** | — | — | 112000 | 425000 | 1200 | 1800 | 162 | 198 | — | — | — | — | — | 184 | 176 | — | 1 | 2.27 | — | — | **51132** |
| | 225 | 51 | 54.7 | 61 | 1.5 | **51232** | **53232** | **53232U** | 223000 | 720000 | 900 | 1300 | 163 | 222 | 190 | 235 | 21 | 160 | 74 | 223 | 202 | 190 | 1.5 | 6.64 | 6.50 | 8.29 | **51232** |
| | 270 | 87 | 91.7 | 100 | 3 | **51332** | **53332** | **53332U** | 410000 | 1340000 | 610 | 920 | 164 | 265 | 215 | 280 | 29 | 200 | 77 | 226 | 204 | 215 | 2.5 | 21.0 | 20.5 | 24.5 | **51332** |
| | 320 | 130 | 135.3 | 150 | 5 | **51432** | **53432** | **53432U** | 680000 | 2410000 | 440 | 670 | 164 | 315 | 240 | 330 | 41.5 | 250 | 84 | 256 | 224 | 240 | 4 | 51.2 | 49.7 | 58.9 | **51432** |
| 170 | 215 | 34 | — | — | 1.1 | **51134** | — | — | 134000 | 510000 | 1100 | 1700 | 172 | 213 | — | — | — | — | — | 197 | 188 | — | 1 | 3.27 | — | — | **51134** |
| | 240 | 55 | 58.7 | 65 | 1.5 | **51234** | **53234** | **53234U** | 261000 | 835000 | 840 | 1200 | 173 | 237 | 200 | 250 | 21.5 | 180 | 91 | 212 | 198 | 200 | 1.5 | 8.13 | 7.89 | 9.95 | **51234** |
| | 280 | 87 | 91.3 | 100 | 3 | **51334** | **53334** | **53334U** | 420000 | 1430000 | 600 | 900 | 174 | 275 | 220 | 290 | 29 | 225 | 105 | 230 | 210 | 220 | 2.5 | 22.0 | 21.3 | 25.7 | **51334** |
| | 340 | 135 | 141 | 156 | 5 | **51434** | **53434** | **53434U** | 755000 | 2730000 | 420 | 630 | 174 | 335 | 255 | 350 | 46 | 250 | 74 | 272 | 238 | 255 | 4 | 60.1 | 58.1 | 69.1 | **51434** |
| 180 | 225 | 34 | — | — | 1.1 | **51136** | — | — | 135000 | 525000 | 1100 | 1600 | 183 | 222 | — | — | — | — | — | 207 | 198 | — | 1 | 3.37 | — | — | **51136** |
| | 250 | 56 | 58.2 | 66 | 1.5 | **51236** | **53236** | **53236U** | 266000 | 875000 | 810 | 1200 | 183 | 247 | 210 | 260 | 21.5 | 200 | 112 | 222 | 208 | 210 | 1.5 | 8.69 | 8.26 | 10.5 | **51236** |
| | 300 | 95 | 99.3 | 109 | 3 | **51336** | **53336** | **53336U** | 485000 | 1700000 | 550 | 820 | 184 | 295 | 240 | 310 | 32 | 225 | 91 | 252 | 228 | 240 | 2.5 | 28.2 | 27.0 | 32.0 | **51336** |
| | 360 | 140 | 148.3 | 164 | 5 | **51436** | **53436** | **53436U** | 785000 | 2980000 | 400 | 600 | 184 | 355 | 270 | 370 | 46.5 | 280 | 97 | 288 | 252 | 270 | 4 | 69.5 | 68.8 | 81.5 | **51436** |
| 190 | 240 | 37 | — | — | 1.1 | **51138** | — | — | 170000 | 655000 | 1000 | 1500 | 193 | 237 | — | — | — | — | — | 220 | 210 | — | 1 | 3.95 | — | — | **51138** |
| | 270 | 62 | 65.7 | 73 | 2 | **51238** | **53238** | **53238U** | 310000 | 1060000 | 740 | 1100 | 194 | 267 | 230 | 280 | 23 | 200 | 98 | 238 | 222 | 230 | 2 | 11.7 | 11.5 | 14.0 | **51238** |
| | 320 | 105 | 111 | 121 | 4 | **51338** | **53338** | **53338U** | 570000 | 2100000 | 500 | 750 | 195 | 315 | 255 | 330 | 33 | 250 | 104 | 268 | 242 | 255 | 3 | 36.1 | 35.8 | 41.9 | **51338** |

# Single-direction Thrust Ball Bearings

Bore Diameter: 200～360mm

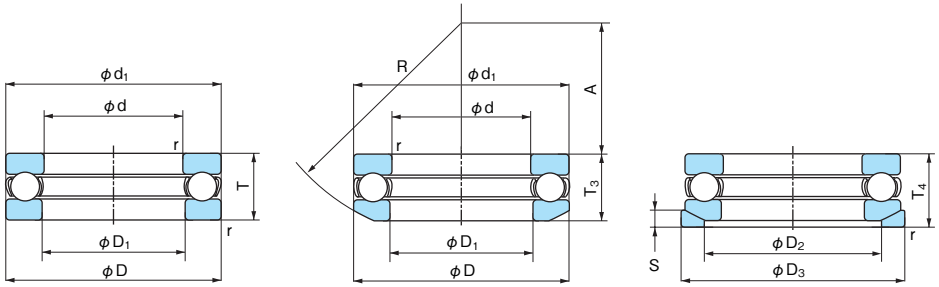


Flat back-face type　　Spherical back-face type　　With aligning seat

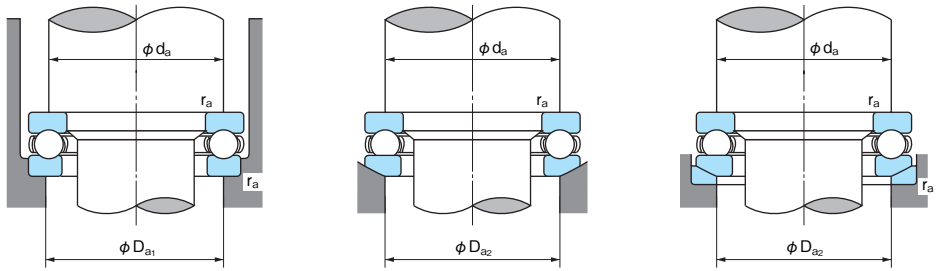


1N=0.102kgf

| Boundary dimensions (mm) | | | | | | Bearing No. | | | Basic dynamic load rating Ca (N) | Basic static load rating Coa (N) | Limiting speed (min⁻¹) | | Dimensions (mm) | | | | | | | Abutment and fillet dimensions (mm) | | | | Mass (kg) Reference | | | Bearing No. |
|---|---|---|---|---|---|---|---|---|---|---|---|---|---|---|---|---|---|---|---|---|---|---|---|---|---|---|---|
| d | D | T | $T_3$ | $T_4$ | r (min) | Flat back-face type | Spherical back-face type | With aligning seat | | | Grease lubrication | Oil lubrication | $D_1$ (min) | $d_1$ (max) | $D_2$ | $D_3$ | S | R | A | da (min) | $Da_1$ (max) | $Da_2$ (max) | ra (max) | Flat back-face type | Spherical back-face type | With aligning seat | |
| 200 | 250 | 37 | — | — | 1.1 | **51140** | — | — | 172000 | 675000 | 1000 | 1500 | 203 | 247 | — | — | — | — | — | 230 | 220 | — | 1 | 4.14 | — | — | **51140** |
| | 280 | 62 | 65.3 | 74 | 2 | **51240** | **53240** | **53240U** | 315000 | 1110000 | 720 | 1000 | 204 | 277 | 240 | 290 | 23 | 225 | 125 | 248 | 232 | 240 | 2 | 12.2 | 12.0 | 14.8 | **51240** |
| | 340 | 110 | 118.4 | 130 | 4 | **51340** | **53340** | **53340U** | 625000 | 2380000 | 470 | 710 | 205 | 335 | 270 | 350 | 38 | 250 | 92 | 284 | 256 | 270 | 3 | 43.0 | 43.1 | 51.0 | **51340** |
| 220 | 270 | 37 | — | — | 1.1 | **51144** | — | — | 177000 | 740000 | 970 | 1400 | 223 | 267 | — | — | — | — | — | 250 | 240 | — | 1 | 4.51 | — | — | **51144** |
| | 300 | 63 | 65.6 | 75 | 2 | **51244** | **53244** | **53244U** | 325000 | 1210000 | 690 | 1000 | 224 | 297 | 260 | 310 | 25 | 225 | 118 | 268 | 252 | 260 | 2 | 13.5 | 13.0 | 16.2 | **51244** |
| 240 | 300 | 45 | — | — | 1.5 | **51148** | — | — | 228000 | 935000 | 830 | 1200 | 243 | 297 | — | — | — | — | — | 276 | 264 | — | 1.5 | 7.35 | — | — | **51148** |
| | 340 | 78 | 81.6 | 92 | 2.1 | **51248** | **53248** | **53248U** | 430000 | 1730000 | 570 | 860 | 244 | 335 | 290 | 350 | 30 | 250 | 122 | 300 | 280 | 290 | 2 | 23.1 | 22.3 | 27.4 | **51248** |
| 260 | 320 | 45 | — | — | 1.5 | **51152** | — | — | 232000 | 990000 | 800 | 1200 | 263 | 317 | — | — | — | — | — | 296 | 284 | — | 1.5 | 7.94 | — | — | **51152** |
| | 360 | 79 | 82.8 | 93 | 2.1 | **51252** | **53252** | **53252U** | 445000 | 1880000 | 550 | 830 | 264 | 355 | 305 | 370 | 30 | 280 | 152 | 320 | 300 | 305 | 2 | 25.0 | 24.0 | 29.7 | **51252** |
| 280 | 350 | 53 | — | — | 1.5 | **51156** | — | — | 315000 | 1350000 | 700 | 1000 | 283 | 347 | — | — | — | — | — | 322 | 308 | — | 1.5 | 12.0 | — | — | **51156** |
| | 380 | 80 | 85 | 94 | 2.1 | **51256** | **53256** | **53256U** | 450000 | 1950000 | 530 | 800 | 284 | 375 | 325 | 390 | 31 | 280 | 143 | 340 | 320 | 325 | 2 | 27.0 | 26.2 | 32.3 | **51256** |
| 300 | 380 | 62 | — | — | 2 | **51160** | — | — | 370000 | 1660000 | 610 | 920 | 304 | 376 | — | — | — | — | — | 348 | 332 | — | 2 | 17.1 | — | — | **51160** |
| | 420 | 95 | 100.5 | 112 | 3 | **51260** | **53260** | **53260U** | 585000 | 2720000 | 450 | 680 | 304 | 415 | 360 | 430 | 34 | 320 | 164 | 372 | 348 | 360 | 2.5 | 42.3 | 41.7 | 49.9 | **51260** |
| 320 | 400 | 63 | — | — | 2 | **51164** | — | — | 380000 | 1760000 | 590 | 880 | 324 | 396 | — | — | — | — | — | 368 | 352 | — | 2 | 18.5 | — | — | **51164** |
| | 440 | 95 | 100.5 | 112 | 3 | **51264** | **53264** | **53264U** | 595000 | 2830000 | 440 | 660 | 325 | 435 | 380 | 450 | 36 | 320 | 157 | 392 | 368 | 380 | 2.5 | 44.7 | 43.8 | 52.7 | **51264** |
| 340 | 420 | 64 | — | — | 2 | **51168** | — | — | 385000 | 1860000 | 570 | 850 | 344 | 416 | — | — | — | — | — | 388 | 372 | — | 2 | 19.9 | — | — | **51168** |
| | 460 | 96 | 100.3 | 113 | 3 | **51268** | **53268** | **53268U** | 600000 | 2940000 | 430 | 640 | 345 | 455 | 400 | 470 | 36 | 360 | 199 | 412 | 388 | 400 | 2.5 | 47.6 | 46.4 | 56.2 | **51268** |
| 360 | 440 | 65 | — | — | 2 | **51172** | — | — | 395000 | 1960000 | 550 | 820 | 364 | 436 | — | — | — | — | — | 408 | 392 | — | 2 | 20.4 | — | — | **51172** |
| | 500 | 110 | 116.7 | 130 | 4 | **51272** | **53272** | **53272U** | 745000 | 3800000 | 380 | 570 | 365 | 495 | 430 | 510 | 43 | 360 | 172 | 444 | 416 | 430 | 3 | 69.0 | 67.7 | 81.5 | **51272** |

NACHI

# Single-direction Thrust Ball Bearings

## Series 2900

Bore Diameter: 10～140mm

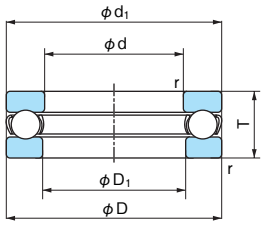


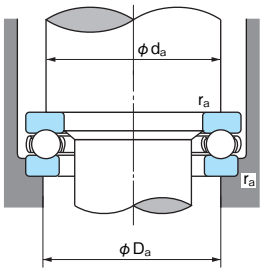


1N=0.102kgf

| Boundary dimensions (mm) | | | | Bearing No. | Basic dynamic load rating Ca (N) | Basic static load rating Coa (N) | Limiting speed (min-1) | | Dimensions (mm) | | Abutment and fillet dimensions (mm) | | | Mass (kg) Reference | Bearing No. |
|---|---|---|---|---|---|---|---|---|---|---|---|---|---|---|---|
| d | D | T | r (min) | | | | Grease lubrication | Oil lubrication | D1 (min) | d1 (max) | da (min) | Da (max) | ra (max) | | |
| **10** | 26 | 12 | 0.6 | **2900** | 12700 | 17100 | 5600 | 8400 | 10.2 | 26 | 19.6 | 16.4 | 0.6 | 0.035 | **2900** |
| **12** | 28 | 12 | 0.6 | **2901** | 13200 | 19000 | 5400 | 8100 | 12.2 | 28 | 21.6 | 18.4 | 0.6 | 0.037 | **2901** |
| **15** | 31 | 12 | 0.6 | **2902** | 14300 | 22800 | 5100 | 7700 | 15.2 | 31 | 25 | 21 | 0.6 | 0.041 | **2902** |
| **18** | 35 | 12 | 0.6 | **2903** | 14400 | 24700 | 4800 | 7300 | 18.2 | 35 | 28 | 25 | 0.6 | 0.045 | **2903** |
| **20** | 37 | 12 | 0.6 | **2904** | 14800 | 26600 | 4700 | 7100 | 20.2 | 37 | 30 | 27 | 0.6 | 0.055 | **2904** |
| **22** | 42 | 14 | 0.6 | **2904½** | 18900 | 34500 | 4100 | 6100 | 22.2 | 42 | 34 | 30 | 0.6 | 0.085 | **2904½** |
| **25** | 45 | 14 | 0.6 | **2905** | 19300 | 37000 | 3900 | 5900 | 25.2 | 45 | 37 | 33 | 0.6 | 0.093 | **2905** |
| **30** | 50 | 14 | 0.6 | **2906** | 20200 | 42000 | 3700 | 5600 | 30.2 | 50 | 42 | 38 | 0.6 | 0.107 | **2906** |
| **35** | 55 | 16 | 0.6 | **2907** | 29900 | 62000 | 3300 | 5000 | 35.2 | 55 | 47 | 43 | 0.6 | 0.137 | **2907** |
| **40** | 60 | 16 | 0.6 | **2908** | 31000 | 70000 | 3200 | 4800 | 40.2 | 60 | 52 | 48 | 0.6 | 0.150 | **2908** |
| **45** | 68 | 16 | 0.6 | **2909** | 32500 | 77500 | 3000 | 4500 | 45.2 | 68 | 59 | 54 | 0.6 | 0.199 | **2909** |
| **50** | 74 | 18 | 0.6 | **2910** | 38500 | 94000 | 2700 | 4100 | 50.2 | 74 | 64 | 60 | 0.6 | 0.255 | **2910** |
| **55** | 78 | 18 | 0.6 | **2911** | 40000 | 103000 | 2600 | 4000 | 55.2 | 78 | 69 | 64 | 0.6 | 0.270 | **2911** |
| **60** | 82 | 18 | 0.6 | **2912** | 40500 | 108000 | 2600 | 3900 | 60.2 | 82 | 73 | 69 | 0.6 | 0.275 | **2912** |
| **65** | 90 | 20 | 0.6 | **2913** | 47500 | 129000 | 2300 | 3500 | 65.2 | 90 | 80 | 75 | 0.6 | 0.374 | **2913** |
| **70** | 95 | 20 | 0.6 | **2914** | 49000 | 140000 | 2200 | 3400 | 70.2 | 95 | 85 | 80 | 0.6 | 0.400 | **2914** |
| **75** | 100 | 20 | 0.6 | **2915** | 51000 | 151000 | 2200 | 3300 | 75.2 | 100 | 90 | 85 | 0.6 | 0.425 | **2915** |
| **80** | 110 | 22 | 0.6 | **2916** | 57000 | 171000 | 2000 | 3000 | 80.2 | 110 | 98 | 92 | 0.6 | 0.600 | **2916** |
| **85** | 115 | 22 | 0.6 | **2917** | 59000 | 184000 | 1900 | 2900 | 85.2 | 115 | 103 | 97 | 0.6 | 0.640 | **2917** |
| **90** | 120 | 22 | 0.6 | **2918** | 59500 | 190000 | 1900 | 2900 | 90.2 | 120 | 108 | 102 | 0.6 | 0.670 | **2918** |
| **95** | 130 | 25 | 0.6 | **2919** | 75500 | 236000 | 1700 | 2600 | 95.2 | 130 | 116 | 109 | 0.6 | 0.795 | **2919** |
| **100** | 135 | 25 | 0.6 | **2920** | 78000 | 253000 | 1700 | 2500 | 100.2 | 135 | 121 | 114 | 0.6 | 0.930 | **2920** |
| **105** | 140 | 25 | 0.6 | **2921** | 78500 | 262000 | 1600 | 2500 | 105.2 | 140 | 126 | 119 | 0.6 | 1.02 | **2921** |
| **110** | 145 | 25 | 0.6 | **2922** | 78000 | 262000 | 1600 | 2400 | 110.2 | 145 | 131 | 124 | 0.6 | 1.15 | **2922** |
| **115** | 150 | 25 | 0.6 | **2923** | 73500 | 245000 | 1600 | 2400 | 115.2 | 150 | 136 | 129 | 0.6 | 1.25 | **2923** |
| **120** | 160 | 27 | 0.6 | **2924** | 94000 | 314000 | 1500 | 2200 | 120.2 | 160 | 144 | 136 | 0.6 | 1.35 | **2924** |
| **125** | 165 | 27 | 0.6 | **2925** | 85500 | 298000 | 1400 | 2200 | 125.3 | 165 | 149 | 141 | 0.6 | 1.48 | **2925** |
| **140** | 185 | 31 | 0.6 | **2928** | 106000 | 375000 | 1300 | 1900 | 140.3 | 185 | 167 | 158 | 0.6 | 2.33 | **2928** |

NACHI

# Single-direction Thrust Ball Bearings

## Series 3900

Bore Diameter: 25～120mm

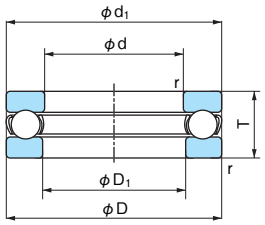


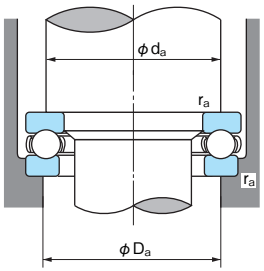


1N=0.102kgf

| Boundary dimensions (mm) | | | | Bearing No. | Basic dynamic load rating Ca (N) | Basic static load rating Coa (N) | Limiting speed (min-1) | | | Dimensions (mm) | | Abutment and fillet dimensions (mm) | | | Mass (kg) Reference | Bearing No. |
|---|---|---|---|---|---|---|---|---|---|---|---|---|---|---|---|---|
| d | D | T | r (min) | | | | Grease lubrication | Oil lubrication | | D1 (min) | d1 (max) | da (min) | Da (max) | ra (max) | | |
| **25** | 52 | 16 | 1 | **3905** | 27100 | 50500 | 3400 | 5200 | | 25.2 | 52 | 42 | 36 | 1.0 | 0.147 | **3905** |
| **30** | 60 | 19 | 1 | **3906** | 38000 | 72500 | 2900 | 4400 | | 30.2 | 60 | 49 | 43 | 1.0 | 0.237 | **3906** |
| **35** | 68 | 22 | 1 | **3907** | 50500 | 99000 | 2500 | 3800 | | 35.2 | 68 | 56.5 | 48.5 | 1.0 | 0.346 | **3907** |
| **40** | 76 | 25 | 1 | **3908** | 61000 | 119000 | 2200 | 3400 | | 40.2 | 76 | 63 | 55 | 1.0 | 0.486 | **3908** |
| **45** | 85 | 28 | 1 | **3909** | 79500 | 163000 | 2000 | 3000 | | 45.2 | 85 | 71 | 61 | 1.0 | 0.684 | **3909** |
| **50** | 92 | 31 | 1 | **3910** | 97000 | 202000 | 1800 | 2800 | | 50.2 | 92 | 77 | 67 | 1.0 | 0.889 | **3910** |
| **55** | 100 | 33 | 1 | **3911** | 110000 | 240000 | 1700 | 2600 | | 55.2 | 100 | 83.5 | 73.5 | 1.0 | 1.114 | **3911** |
| **60** | 106 | 35 | 1.5 | **3912** | 119000 | 263000 | 1600 | 2400 | | 60.2 | 106 | 89 | 79 | 1.5 | 1.293 | **3912** |
| **65** | 112 | 36 | 1.5 | **3913** | 128000 | 287000 | 1500 | 2300 | | 65.2 | 112 | 95.5 | 83.5 | 1.5 | 1.443 | **3913** |
| **70** | 120 | 38 | 1.5 | **3914** | 143000 | 335000 | 1400 | 2200 | | 70.2 | 120 | 102 | 90 | 1.5 | 1.767 | **3914** |
| **75** | 128 | 41 | 1.5 | **3915** | 159000 | 365000 | 1300 | 2000 | | 75.2 | 128 | 108.5 | 96.5 | 1.5 | 2.132 | **3915** |
| **80** | 136 | 44 | 1.5 | **3916** | 183000 | 425000 | 1200 | 1900 | | 80.2 | 136 | 115 | 101 | 1.5 | 2.606 | **3916** |
| **85** | 145 | 47 | 1.5 | **3917** | 207000 | 490000 | 1100 | 1700 | | 85.2 | 145 | 122 | 108 | 1.5 | 3.157 | **3917** |
| **90** | 155 | 50 | 1.5 | **3918** | 232000 | 555000 | 1100 | 1600 | | 90.2 | 155 | 131 | 115 | 1.5 | 3.907 | **3918** |
| **95** | 165 | 54 | 1.5 | **3919** | 253000 | 630000 | 1000 | 1500 | | 95.2 | 165 | 139 | 123 | 1.5 | 4.810 | **3919** |
| **100** | 172 | 57 | 1.5 | **3920** | 250000 | 630000 | 980 | 1400 | | 100.2 | 172 | 144 | 128 | 1.5 | 5.454 | **3920** |
| **105** | 180 | 60 | 2.5 | **3921** | 257000 | 670000 | 930 | 1400 | | 105.2 | 180 | 153 | 137 | 2.5 | 6.354 | **3921** |
| **110** | 190 | 63 | 2.5 | **3922** | 293000 | 785000 | 880 | 1300 | | 110.2 | 190 | 159 | 141 | 2.5 | 7.333 | **3922** |
| **115** | 200 | 66 | 2.5 | **3923** | 315000 | 870000 | 840 | 1200 | | 115.2 | 200 | 167.5 | 147.5 | 2.5 | 8.526 | **3923** |
| **120** | 210 | 69 | 2.5 | **3924** | 325000 | 930000 | 800 | 1200 | | 120.2 | 210 | 178 | 158 | 2.5 | 10.195 | **3924** |

# Single-direction Thrust Ball Bearings

## Inch Series

## Series O

Bore Diameter: 9.525～152.400mm

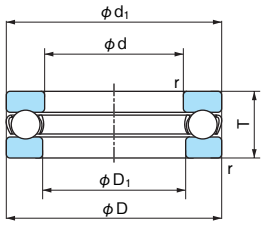


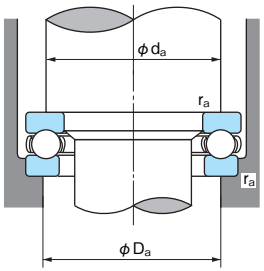


1N=0.102kgf

| Boundary dimensions (mm) | | | | Bearing No. | Basic dynamic load rating Ca (N) | Basic static load rating Coa (N) | Limiting speed (min-1) | | Dimensions (mm) | | Abutment and fillet dimensions (mm) | | | Mass (kg) Reference | Bearing No. |
|---|---|---|---|---|---|---|---|---|---|---|---|---|---|---|---|
| d | D | T | r (min) | | | | Grease lubrication | Oil lubrication | $D_1$ (min) | $d_1$ (max) | da (min) | Da (max) | ra (max) | | |
| **9.525** | 25.400 | 13.494 | 0.8 | **O - 3** | 11800 | 15200 | 5400 | 8100 | 9.925 | 24.606 | 19.1 | 15.9 | 0.8 | 0.036 | **O - 3** |
| **12.700** | 32.544 | 15.875 | 0.8 | **O - 4** | 18600 | 25100 | 4300 | 6500 | 13.097 | 31.750 | 24.6 | 20.6 | 0.8 | 0.077 | **O - 4** |
| **15.875** | 35.719 | 15.875 | 0.8 | **O - 5** | 19400 | 28300 | 4100 | 6200 | 16.272 | 34.925 | 27.8 | 23.8 | 0.8 | 0.086 | **O - 5** |
| **19.050** | 38.894 | 15.875 | 0.8 | **O - 6** | 21400 | 34500 | 4000 | 6000 | 19.447 | 38.100 | 29 | 26 | 0.8 | 0.095 | **O - 6** |
| **22.225** | 42.069 | 15.875 | 0.8 | **O - 7** | 21900 | 37500 | 3800 | 5800 | 22.622 | 41.275 | 34 | 30 | 0.8 | 0.100 | **O - 7** |
| **25.400** | 45.244 | 15.875 | 1.6 | **O - 8** | 22500 | 41000 | 3700 | 5500 | 25.797 | 44.450 | 37 | 33 | 0.8 | 0.110 | **O - 8** |
| **28.575** | 48.419 | 15.875 | 1.6 | **O - 9** | 24100 | 47000 | 3600 | 5400 | 28.972 | 47.625 | 40 | 37 | 0.8 | 0.128 | **O - 9** |
| **31.750** | 53.181 | 18.256 | 1.6 | **O -10** | 27900 | 54500 | 3200 | 4800 | 32.147 | 52.388 | 45 | 40 | 0.8 | 0.164 | **O -10** |
| **34.925** | 56.356 | 18.256 | 1.6 | **O -11** | 28600 | 58000 | 3100 | 4600 | 35.322 | 55.562 | 48 | 43 | 0.8 | 0.186 | **O -11** |
| **38.100** | 59.531 | 18.256 | 1.6 | **O -12** | 30500 | 66000 | 3000 | 4500 | 38.497 | 58.738 | 51 | 47 | 1 | 0.200 | **O -12** |
| **41.275** | 62.706 | 18.256 | 1.6 | **O -13** | 26700 | 63000 | 2900 | 4400 | 41.672 | 61.912 | 54 | 50 | 1 | 0.210 | **O -13** |
| **44.450** | 68.262 | 19.050 | 1.6 | **O -14** | 32500 | 77500 | 2700 | 4100 | 44.847 | 67.469 | 59 | 54 | 1 | 0.260 | **O -14** |
| **47.625** | 71.438 | 19.050 | 1.6 | **O -15** | 37500 | 89000 | 2700 | 4000 | 48.021 | 70.644 | 62 | 57 | 1 | 0.285 | **O -15** |
| **50.800** | 75.406 | 19.050 | 2.4 | **O -16** | 38000 | 94000 | 2600 | 3900 | 51.594 | 74.613 | 66 | 61 | 1 | 0.300 | **O -16** |
| **53.975** | 81.756 | 22.225 | 2.4 | **O -17** | 49500 | 118000 | 2300 | 3500 | 54.769 | 80.962 | 71 | 65 | 1.6 | 0.405 | **O -17** |
| **57.150** | 84.931 | 22.225 | 2.4 | **O -18** | 50500 | 125000 | 2300 | 3400 | 57.944 | 84.138 | 74 | 68 | 1.6 | 0.450 | **O -18** |
| **60.325** | 91.281 | 25.400 | 2.4 | **O -19** | 58000 | 145000 | 2000 | 3100 | 61.119 | 90.488 | 79 | 73 | 1.6 | 0.590 | **O -19** |
| **63.500** | 94.456 | 25.400 | 2.4 | **O -20** | 59500 | 152000 | 2000 | 3000 | 64.294 | 93.662 | 82 | 76 | 1.6 | 0.610 | **O -20** |
| **66.675** | 97.631 | 25.400 | 2.4 | **O -21** | 60500 | 160000 | 2000 | 3000 | 67.469 | 96.838 | 85 | 79 | 1.6 | 0.660 | **O -21** |
| **69.850** | 102.394 | 25.400 | 2.4 | **O -22** | 71500 | 179000 | 1900 | 2900 | 70.644 | 101.600 | 89 | 83 | 1.6 | 0.700 | **O -22** |
| **73.025** | 105.569 | 25.400 | 2.4 | **O -23** | 75500 | 199000 | 1900 | 2800 | 73.819 | 104.775 | 93 | 86 | 1.6 | 0.730 | **O -23** |
| **76.200** | 111.125 | 28.575 | 3.2 | **O -24** | 77000 | 209000 | 1700 | 2600 | 77.788 | 109.538 | 97 | 90 | 2 | 0.900 | **O -24** |
| **82.550** | 122.238 | 31.750 | 3.2 | **O -26** | 97500 | 252000 | 1600 | 2400 | 84.138 | 120.650 | 106 | 98 | 2 | 1.30 | **O -26** |
| **88.900** | 128.588 | 31.750 | 3.2 | **O -28** | 99000 | 266000 | 1500 | 2300 | 90.488 | 127.000 | 113 | 105 | 2 | 1.32 | **O -28** |
| **95.250** | 134.938 | 31.750 | 3.2 | **O -30** | 98500 | 289000 | 1500 | 2200 | 96.838 | 133.350 | 119 | 111 | 2 | 1.36 | **O -30** |
| **101.600** | 147.638 | 34.925 | 3.2 | **O -32** | 113000 | 310000 | 1300 | 2000 | 103.188 | 146.050 | 129 | 120 | 2 | 1.88 | **O -32** |
| **114.300** | 166.688 | 44.450 | 4.8 | **O -36** | 157000 | 435000 | 1100 | 1700 | 115.888 | 165.100 | 146 | 135 | 3 | 3.18 | **O -36** |
| **127.000** | 185.738 | 50.800 | 4.8 | **O -40** | 193000 | 545000 | 1000 | 1500 | 128.588 | 184.150 | 162 | 150 | 3 | 4.54 | **O -40** |
| **139.700** | 204.788 | 55.562 | 4.8 | **O -44** | 248000 | 715000 | 910 | 1300 | 141.288 | 203.200 | 179 | 166 | 3 | 5.90 | **O -44** |
| **152.400** | 220.662 | 60.325 | 4.8 | **O -48** | 269000 | 805000 | 830 | 1200 | 153.988 | 219.075 | 193 | 180 | 3 | 7.25 | **O -48** |

# Extra Small and Miniature Thrust Ball Bearings

## TAM Type

Bore Diameter: 3～8mm

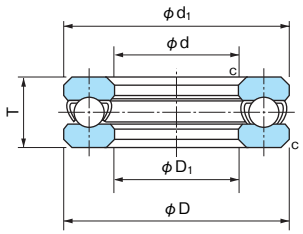


1N=0.102kgf

| Boundary dimensions (mm) | | | | | | Bearing No. | Basic dynamic load rating Ca (N) | Basic static load rating Coa (N) | Mass (kg) Reference |
|---|---|---|---|---|---|---|---|---|---|
| d | D | T | c | $D_1$ | $d_1$ | | | | |
| **3** | 8 | 3.5 | 0.2 | 3.2 | 8 | **3TAM8** | 1790 | 1720 | 0.6 |
| **4** | 9 | 4 | 0.2 | 4.1 | 9 | **4TAM9** | 1860 | 1970 | 0.8 |
| **5** | 10 | 4 | 0.3 | 5.1 | 10 | **5TAM10** | 1930 | 2220 | 0.9 |
| **6** | 12 | 4.5 | 0.3 | 6.2 | 12 | **6TAM12** | 1820 | 2220 | 1.7 |
| **7** | 14 | 4.5 | 0.3 | 7.2 | 14 | **7TAM14** | 2480 | 3140 | 2.3 |
| **8** | 16 | 5 | 0.3 | 8.2 | 16 | **8TAM16** | 3920 | 4990 | 3.4 |





# Extra Small and Miniature Thrust Ball Bearings

## TG Type (Banded)

Bore Diameter: 5～8mm

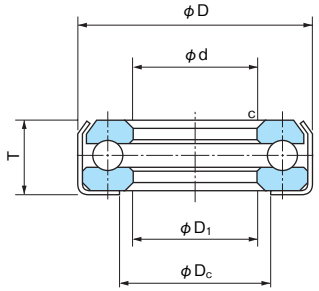


1N=0.102kgf

| Boundary dimensions (mm) | | | | | | Bearing No. | Basic dynamic load rating Ca (N) | Basic static load rating Coa (N) | Mass (kg) Reference |
|---|---|---|---|---|---|---|---|---|---|
| d | D | T | c | $D_1$ | $D_c$ | | | | |
| **5** | 10 | 4.2 | 0.3 | 5.1 | 5.8 | **5TG-10** | 2200 | 2710 | 1.3 |
| **6** | 12 | 4.7 | 0.5 | 6.2 | 7.2 | **6TG-12** | 2450 | 3450 | 2.2 |
| **7** | 14 | 4.7 | 0.5 | 7.2 | 8.2 | **7TG-14** | 3320 | 4890 | 3.0 |
| **8** | 16 | 5.2 | 0.5 | 8.2 | 9.2 | **8TG-16** | 4750 | 6650 | 4.0 |

# Double-direction Thrust Ball Bearings

Bore Diameter: 15～75mm

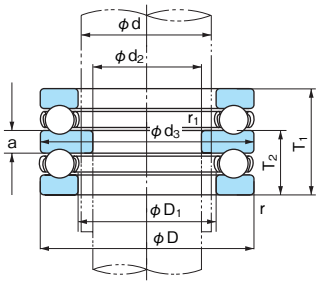


Flat back-face type

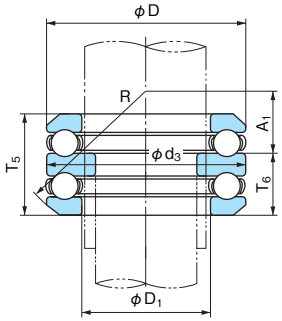


Spherical back-face type

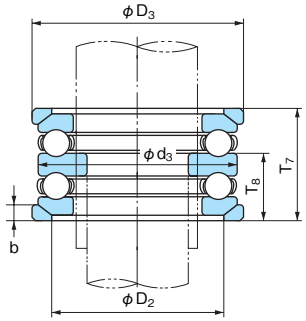


With aligning seat

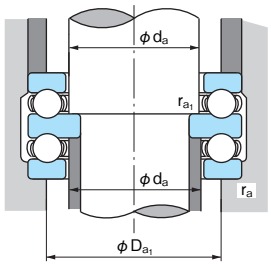


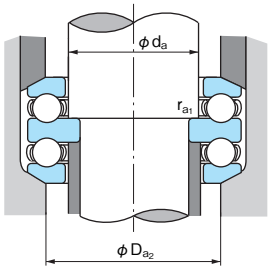


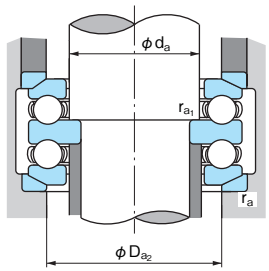


1N=0.102kgf

| Boundary dimensions (mm) | | | | | | | | Bearing No. | | | Basic dynamic load rating Ca (N) | Basic static load rating Coa (N) | Limiting speed (min⁻¹) | | Dimensions (mm) | | | | | | | | | | | Abutment and fillet dimensions (mm) | | | | | Mass (kg) Reference | | | Bearing No. |
|---|---|---|---|---|---|---|---|---|---|---|---|---|---|---|---|---|---|---|---|---|---|---|---|---|---|---|---|---|---|---|---|---|---|---|
| d | $d_2$ | D | $T_1$ | $T_5$ | $T_7$ | r (min) | $r_1$ (min) | Flat back-face type | Spherical back-face type | With aligning seat | | | Grease lubrication | Oil lubrication | $d_3$ (max) | $D_1$ (min) | $D_2$ | $D_3$ | $T_2$ | $T_6$ | $T_8$ | a | b | $A_1$ | R | da (min) | $Da_1$ (max) | $Da_2$ (max) | ra (max) | $ra_1$ (max) | Flat back-face type | Spherical back-face type | With aligning seat | |
| **15** | 10 | 32 | 22 | 24.6 | 28 | 0.6 | 0.3 | **52202** | **54202** | **54202U** | 16600 | 24800 | 5100 | 7600 | 32 | 17 | 24 | 35 | 13.5 | 14.8 | 16.5 | 5 | 4 | 10.5 | 28 | 15 | 22 | 24 | 0.6 | 0.3 | 0.085 | 0.090 | 0.116 | **52202** |
| **20** | 15 | 40 | 26 | 27.4 | 32 | 0.6 | 0.3 | **52204** | **54204** | **54204U** | 22200 | 37500 | 4200 | 6300 | 40 | 22 | 30 | 42 | 16 | 16.7 | 19 | 6 | 5 | 16 | 36 | 20 | 28 | 30 | 0.6 | 0.3 | 0.150 | 0.147 | 0.189 | **52204** |
| | 20 | 47 | 28 | 31.4 | 36 | 0.6 | 0.3 | **52205** | **54205** | **54205U** | 27800 | 50500 | 3700 | 5600 | 47 | 27 | 36 | 50 | 17.5 | 19.2 | 21.5 | 7 | 5.5 | 16.5 | 40 | 25 | 34 | 36 | 0.6 | 0.3 | 0.230 | 0.241 | 0.305 | **52205** |
| **25** | 20 | 52 | 34 | 37.6 | 42 | 1 | 0.3 | **52305** | **54305** | **54305U** | 35500 | 61500 | 3200 | 4900 | 52 | 27 | 38 | 55 | 21 | 22.8 | 25 | 8 | 6 | 18 | 45 | 25 | 36 | 38 | 1 | 0.3 | 0.330 | 0.340 | 0.431 | **52305** |
| | 15 | 60 | 45 | 49.8 | 55 | 1 | 0.6 | **52405** | **54405** | **54405U** | 55500 | 89500 | 2600 | 3900 | 60 | 27 | 42 | 62 | 28 | 30.4 | 33 | 11 | 8 | 15 | 50 | 25 | 39 | 42 | 1 | 0.6 | 0.630 | 0.650 | 0.796 | **52405** |
| | 25 | 52 | 29 | 32.6 | 37 | 0.6 | 0.3 | **52206** | **54206** | **54206U** | 29300 | 58000 | 3400 | 5200 | 52 | 32 | 42 | 55 | 18 | 19.8 | 22 | 7 | 5.5 | 20 | 45 | 30 | 39 | 42 | 0.6 | 0.3 | 0.272 | 0.291 | 0.356 | **52206** |
| **30** | 25 | 60 | 38 | 41.2 | 46 | 1 | 0.3 | **52306** | **54306** | **54306U** | 42500 | 78500 | 2800 | 4200 | 60 | 32 | 45 | 62 | 23.5 | 25.1 | 27.5 | 9 | 7 | 19.5 | 50 | 30 | 42 | 45 | 1 | 0.3 | 0.490 | 0.495 | 0.607 | **52306** |
| | 20 | 70 | 52 | 56.2 | 62 | 1 | 0.6 | **52406** | **54406** | **54406U** | 72500 | 126000 | 2200 | 3300 | 70 | 32 | 50 | 75 | 32 | 34.1 | 37 | 12 | 9 | 16 | 56 | 30 | 46 | 50 | 1 | 0.6 | 1.00 | 1.00 | 1.26 | **52406** |
| | 30 | 62 | 34 | 37.8 | 42 | 1 | 0.3 | **52207** | **54207** | **54207U** | 39000 | 78000 | 2900 | 4400 | 62 | 37 | 48 | 65 | 21 | 22.9 | 25 | 8 | 7 | 21 | 50 | 35 | 46 | 48 | 1 | 0.3 | 0.420 | 0.431 | 0.550 | **52207** |
| **35** | 30 | 68 | 44 | 47.2 | 52 | 1 | 0.3 | **52307** | **54307** | **54307U** | 55500 | 105000 | 2400 | 3700 | 68 | 37 | 52 | 72 | 27 | 28.6 | 31 | 10 | 7.5 | 21 | 56 | 35 | 48 | 52 | 1 | 0.3 | 0.710 | 0.711 | 0.881 | **52307** |
| | 25 | 80 | 59 | 63 | 69 | 1.1 | 0.6 | **52407** | **54407** | **54407U** | 87000 | 155000 | 1900 | 2900 | 80 | 37 | 58 | 85 | 36.5 | 38.5 | 41.5 | 14 | 10 | 18.5 | 64 | 35 | 53 | 58 | 1 | 0.6 | 1.44 | 1.43 | 1.78 | **52407** |
| | 30 | 68 | 36 | 38.6 | 44 | 1 | 0.6 | **52208** | **54208** | **54208U** | 47000 | 98500 | 2700 | 4100 | 68 | 42 | 55 | 72 | 22.5 | 23.8 | 26.5 | 9 | 7 | 25 | 56 | 40 | 51 | 55 | 1 | 0.6 | 0.540 | 0.542 | 0.686 | **52208** |
| **40** | 30 | 78 | 49 | 54 | 59 | 1 | 0.6 | **52308** | **54308** | **54308U** | 69000 | 135000 | 2200 | 3300 | 78 | 42 | 60 | 82 | 30.5 | 33 | 35.5 | 12 | 8.5 | 23.5 | 64 | 40 | 55 | 60 | 1 | 0.6 | 1.06 | 1.10 | 1.33 | **52308** |
| | 30 | 90 | 65 | 69.4 | 77 | 1.1 | 0.6 | **52408** | **54408** | **54408U** | 112000 | 205000 | 1700 | 2600 | 90 | 42 | 65 | 95 | 40 | 42.2 | 46 | 15 | 12 | 22 | 72 | 40 | 60 | 65 | 1 | 0.6 | 2.03 | 2.00 | 2.52 | **52408** |
| | 35 | 73 | 37 | 39.6 | 45 | 1 | 0.6 | **52209** | **54209** | **54209U** | 47500 | 105000 | 2600 | 3900 | 73 | 47 | 60 | 78 | 23 | 24.3 | 27 | 9 | 7.5 | 23 | 56 | 45 | 56 | 60 | 1 | 0.6 | 0.620 | 0.617 | 0.796 | **52209** |
| **45** | 35 | 85 | 52 | 56.2 | 62 | 1 | 0.6 | **52309** | **54309** | **54309U** | 80000 | 163000 | 2000 | 3000 | 85 | 47 | 65 | 90 | 32 | 34.1 | 37 | 12 | 10 | 21 | 64 | 45 | 61 | 65 | 1 | 0.6 | 1.29 | 1.28 | 1.63 | **52309** |
| | 35 | 100 | 72 | 78.8 | 86 | 1.1 | 0.6 | **52409** | **54409** | **54409U** | 129000 | 243000 | 1600 | 2400 | 100 | 47 | 72 | 105 | 44.5 | 47.9 | 51.5 | 17 | 12.5 | 23.5 | 80 | 45 | 67 | 72 | 1 | 0.6 | 2.71 | 2.76 | 3.40 | **52409** |
| | 40 | 78 | 39 | 42 | 47 | 1 | 0.6 | **52210** | **54210** | **54210U** | 48500 | 112000 | 2400 | 3600 | 78 | 52 | 62 | 82 | 24 | 25.5 | 28 | 9 | 7.5 | 30.5 | 64 | 50 | 61 | 62 | 1 | 0.6 | 0.71 | 0.697 | 0.899 | **52210** |
| **50** | 40 | 95 | 58 | 64.6 | 70 | 1.1 | 0.6 | **52310** | **54310** | **54310U** | 96500 | 202000 | 1800 | 2700 | 95 | 52 | 72 | 100 | 36 | 39.3 | 42 | 14 | 11 | 23 | 72 | 50 | 68 | 72 | 1 | 0.6 | 1.86 | 1.92 | 2.37 | **52310** |
| | 40 | 110 | 78 | 83.2 | 92 | 1.5 | 0.6 | **52410** | **54410** | **54410U** | 148000 | 283000 | 1400 | 2100 | 110 | 52 | 80 | 115 | 48 | 50.6 | 55 | 18 | 14 | 30 | 90 | 50 | 74 | 80 | 1.5 | 0.6 | 3.56 | 3.52 | 4.36 | **52410** |
| | 45 | 90 | 45 | 49.6 | 55 | 1 | 0.6 | **52211** | **54211** | **54211U** | 69500 | 159000 | 2100 | 3100 | 90 | 57 | 72 | 95 | 27.5 | 29.8 | 32.5 | 10 | 9 | 32.5 | 72 | 55 | 69 | 72 | 1 | 0.6 | 1.12 | 1.14 | 1.54 | **52211** |
| **55** | 45 | 105 | 64 | 72.6 | 78 | 1.1 | 0.6 | **52311** | **54311** | **54311U** | 120000 | 246000 | 1600 | 2400 | 105 | 57 | 80 | 110 | 39.5 | 43.8 | 46.5 | 15 | 11.5 | 25.5 | 80 | 55 | 75 | 80 | 1 | 0.6 | 2.51 | 2.65 | 3.22 | **52311** |
| | 45 | 120 | 87 | 92 | 101 | 1.5 | 0.6 | **52411** | **54411** | **54411U** | 178000 | 360000 | 1300 | 1900 | 120 | 57 | 88 | 125 | 53.5 | 56 | 60.5 | 20 | 15.5 | 22.5 | 90 | 55 | 81 | 88 | 1.5 | 0.6 | 4.70 | 4.55 | 5.64 | **52411** |
| | 50 | 95 | 46 | 50 | 56 | 1 | 0.6 | **52212** | **54212** | **54212U** | 73500 | 179000 | 2000 | 3000 | 95 | 62 | 78 | 100 | 28 | 30 | 33 | 10 | 9 | 30.5 | 72 | 60 | 74 | 78 | 1 | 0.6 | 1.25 | 1.26 | 1.59 | **52212** |
| **60** | 50 | 110 | 64 | 70.6 | 78 | 1.1 | 0.6 | **52312** | **54312** | **54312U** | 123000 | 267000 | 1600 | 2400 | 110 | 62 | 85 | 115 | 39.5 | 42.8 | 46.5 | 15 | 11.5 | 36.5 | 90 | 60 | 80 | 85 | 1 | 0.6 | 2.68 | 2.76 | 3.39 | **52312** |
| | 50 | 130 | 93 | 99 | 107 | 1.5 | 0.6 | **52412** | **54412** | **54412U** | 213000 | 435000 | 1200 | 1800 | 130 | 62 | 95 | 135 | 57 | 60 | 64 | 21 | 16 | 28 | 100 | 60 | 88 | 95 | 1.5 | 0.6 | 6.33 | 6.20 | 7.45 | **52412** |
| | 55 | 100 | 47 | 50.4 | 57 | 1 | 0.6 | **52213** | **54213** | **54213U** | 75000 | 189000 | 1900 | 2800 | 100 | 67 | 82 | 105 | 28.5 | 30.2 | 33.5 | 10 | 9 | 38.5 | 80 | 65 | 79 | 82 | 1 | 0.6 | 1.36 | 1.35 | 1.72 | **52213** |
| **65** | 55 | 115 | 65 | 71.8 | 79 | 1.1 | 0.6 | **52313** | **54313** | **54313U** | 127000 | 287000 | 1500 | 2300 | 115 | 67 | 90 | 120 | 40 | 43.4 | 47 | 15 | 12.5 | 34.5 | 90 | 65 | 85 | 90 | 1 | 0.6 | 2.90 | 2.98 | 3.67 | **52313** |
| | 50 | 140 | 101 | 109.4 | 119 | 2 | 1 | **52413** | **54413** | **54413U** | 231000 | 495000 | 1100 | 1600 | 140 | 68 | 100 | 145 | 62 | 66.2 | 71 | 23 | 17.5 | 34 | 112 | 65 | 95 | 100 | 2 | 1 | 8.03 | 8.01 | 9.67 | **52413** |
| | 55 | 105 | 47 | 50.6 | 57 | 1 | 1 | **52214** | **54214** | **54214U** | 76000 | 199000 | 1800 | 2800 | 105 | 72 | 88 | 110 | 28.5 | 30.3 | 33.5 | 10 | 9 | 36.5 | 80 | 70 | 84 | 88 | 1 | 1 | 1.48 | 1.48 | 1.86 | **52214** |
| **70** | 55 | 125 | 72 | 80.4 | 88 | 1.1 | 1 | **52314** | **54314** | **54314U** | 148000 | 340000 | 1400 | 2100 | 125 | 72 | 98 | 130 | 44 | 48.2 | 52 | 16 | 13 | 39 | 100 | 70 | 92 | 98 | 1 | 1 | 3.90 | 4.08 | 4.92 | **52314** |
| | 55 | 150 | 107 | 114.2 | 125 | 2 | 1 | **52414** | **54414** | **54414U** | 250000 | 555000 | 1000 | 1500 | 150 | 73 | 110 | 155 | 65.5 | 69.1 | 74.5 | 24 | 19.5 | 28.5 | 112 | 70 | 102 | 110 | 2 | 1 | 9.71 | 9.50 | 11.5 | **52414** |
| | 60 | 110 | 47 | 49.6 | 57 | 1 | 1 | **52215** | **54215** | **54215U** | 77500 | 209000 | 1800 | 2700 | 110 | 77 | 92 | 115 | 28.5 | 29.8 | 33.5 | 10 | 9.5 | 47.5 | 90 | 75 | 89 | 92 | 1 | 1 | 1.57 | 1.53 | 1.96 | **52215** |
| **75** | 60 | 135 | 79 | 87.2 | 95 | 1.5 | 1 | **52315** | **54315** | **54315U** | 170000 | 395000 | 1200 | 1900 | 135 | 77 | 105 | 140 | 48.5 | 52.6 | 56.5 | 18 | 15 | 32.5 | 100 | 75 | 99 | 105 | 1.5 | 1 | 4.83 | 4.93 | 6.04 | **52315** |
| | 60 | 160 | 115 | 123 | 135 | 2 | 1 | **52415** | **54415** | **54415U** | 252000 | 560000 | 950 | 1400 | 160 | 78 | 115 | 165 | 70.5 | 74.5 | 80.5 | 26 | 21 | 36.5 | 125 | 75 | 109 | 115 | 2 | 1 | 11.8 | 11.6 | 14.1 | **52415** |

# Double-direction Thrust Ball Bearings

Bore Diameter: 80～170mm

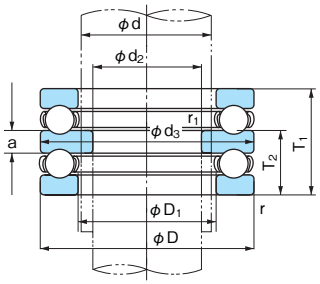


Flat back-face type

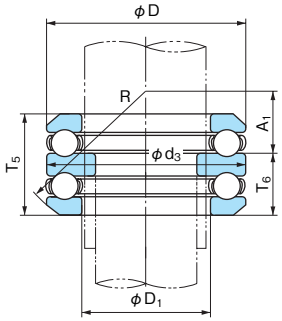


Spherical back-face type

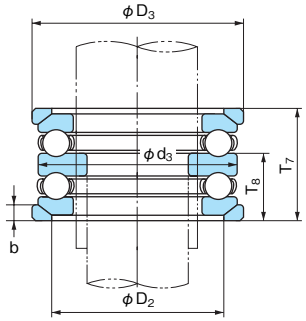


With aligning seat

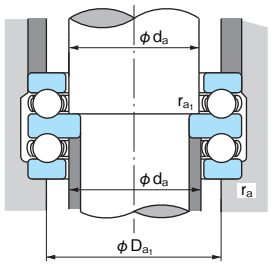


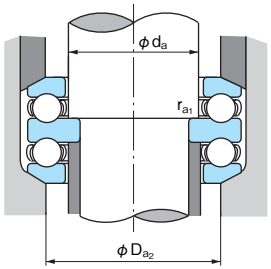


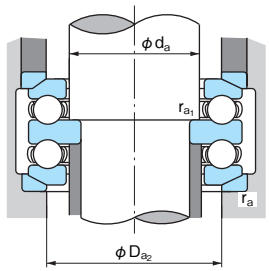


1N=0.102kgf

| Boundary dimensions (mm) | | | | | | | | Bearing No. | | | Basic dynamic load rating Ca (N) | Basic static load rating Coa (N) | Limiting speed (min⁻¹) | | Dimensions (mm) | | | | | | | | | | | Abutment and fillet dimensions (mm) | | | | | Mass (kg) Reference | | | Bearing No. |
|---|---|---|---|---|---|---|---|---|---|---|---|---|---|---|---|---|---|---|---|---|---|---|---|---|---|---|---|---|---|---|---|---|---|---|---|
| d | $d_2$ | D | $T_1$ | $T_5$ | $T_7$ | r (min) | $r_1$ (min) | Flat back-face type | Spherical back-face type | With aligning seat | | | Grease lubrication | Oil lubrication | $d_3$ (max) | $D_1$ (min) | $D_2$ | $D_3$ | $T_2$ | $T_6$ | $T_8$ | a | b | $A_1$ | R | da (min) | $Da_1$ (max) | $Da_2$ (max) | ra (max) | $ra_1$ (max) | Flat back-face type | Spherical back-face type | With aligning seat | |
| | 65 | 115 | 48 | 51 | 58 | 1 | 1 | **52216** | **54216** | **54216U** | 78500 | 219000 | 1700 | 2600 | 115 | 82 | 98 | 120 | 29 | 30.5 | 34 | 10 | 10 | 45 | 90 | 80 | 94 | 98 | 1 | 1 | 1.69 | 1.67 | 2.11 | **52216** |
| **80** | 65 | 140 | 79 | 86.2 | 95 | 1.5 | 1 | **52316** | **54316** | **54316U** | 176000 | 425000 | 1200 | 1800 | 140 | 82 | 110 | 145 | 48.5 | 52.1 | 56.5 | 18 | 15 | 45.5 | 112 | 80 | 104 | 110 | 1.5 | 1 | 5.06 | 5.14 | 6.29 | **52316** |
| | 65 | 170 | 120 | 128.4 | 140 | 2.1 | 1 | **52416** | **54416** | **54416U** | 270000 | 620000 | 900 | 1300 | 170 | 83 | 125 | 175 | 73.5 | 77.7 | 83.5 | 27 | 22 | 30.5 | 125 | 80 | 116 | 125 | 2 | 1 | 14.0 | 13.7 | 16.5 | **52416** |
| | 70 | 125 | 55 | 59.2 | 67 | 1 | 1 | **52217** | **54217** | **54217U** | 95500 | 264000 | 1600 | 2400 | 125 | 88 | 105 | 130 | 33.5 | 35.6 | 39.5 | 12 | 11 | 49.5 | 100 | 85 | 101 | 105 | 1 | 1 | 2.34 | 2.34 | 2.93 | **52217** |
| **85** | 70 | 150 | 87 | 95.2 | 105 | 1.5 | 1 | **52317** | **54317** | **54317U** | 206000 | 490000 | 1100 | 1700 | 150 | 88 | 115 | 155 | 53 | 57.1 | 62 | 19 | 17.5 | 39 | 112 | 85 | 111 | 115 | 1.5 | 1 | 6.43 | 6.41 | 8.05 | **52317** |
| | 65 | 180 | 128 | 138 | 150 | 2.1 | 1.1 | **52417** | **54417** | **54417U** | 288000 | 685000 | 850 | 1200 | 179.5 | 88 | 130 | 185 | 78.5 | 83.5 | 89.5 | 29 | 23 | 40.5 | 140 | 85 | 123 | 130 | 2 | 1 | 17.5 | 17.3 | 20.7 | **52417** |
| | 75 | 135 | 62 | 69 | 76 | 1.1 | 1 | **52218** | **54218** | **54218U** | 116000 | 325000 | 1400 | 2100 | 135 | 93 | 110 | 140 | 38 | 41.5 | 45 | 14 | 13.5 | 42 | 100 | 90 | 108 | 110 | 1 | 1 | 3.22 | 3.25 | 4.12 | **52218** |
| **90** | 75 | 155 | 88 | 97.2 | 106 | 1.5 | 1 | **52318** | **54318** | **54318U** | 213000 | 525000 | 1100 | 1600 | 155 | 93 | 120 | 160 | 53.5 | 58.1 | 62.5 | 19 | 18 | 36.5 | 112 | 90 | 116 | 120 | 1.5 | 1 | 6.60 | 6.62 | 8.33 | **52318** |
| | 70 | 190 | 135 | 143.4 | 157 | 2.1 | 1.1 | **52418** | **54418** | **54418U** | 305000 | 750000 | 790 | 1100 | 189.5 | 93 | 140 | 195 | 82.5 | 86.7 | 93.5 | 30 | 25.5 | 34.5 | 140 | 90 | 130 | 140 | 2 | 1 | 19.6 | 19.1 | 23.0 | **52418** |
| | 85 | 150 | 67 | 72.8 | 81 | 1.1 | 1 | **52220** | **54220** | **54220U** | 146000 | 410000 | 1300 | 1900 | 150 | 103 | 125 | 155 | 41 | 43.9 | 48 | 15 | 14 | 49 | 112 | 100 | 120 | 125 | 1 | 1 | 4.29 | 4.29 | 5.32 | **52220** |
| **100** | 85 | 170 | 97 | 105.4 | 115 | 1.5 | 1 | **52320** | **54320** | **54320U** | 236000 | 595000 | 1000 | 1500 | 170 | 103 | 135 | 175 | 59 | 63.2 | 68 | 21 | 18 | 42 | 125 | 100 | 128 | 135 | 1.5 | 1 | 8.90 | 8.92 | 10.8 | **52320** |
| | 80 | 210 | 150 | 160 | 176 | 3 | 1.1 | **52420** | **54420** | **54420U** | 345000 | 895000 | 710 | 1000 | 209.5 | 103 | 155 | 220 | 91.5 | 96.5 | 104.5 | 33 | 27 | 43.5 | 160 | 100 | 144 | 155 | 2.5 | 1 | 26.6 | 26.2 | 32.0 | **52420** |
| | 95 | 160 | 67 | 71.4 | 81 | 1.1 | 1 | **52222** | **54222** | **54222U** | 153000 | 450000 | 1200 | 1900 | 160 | 113 | 135 | 165 | 41 | 43.2 | 48 | 15 | 14 | 62 | 125 | 110 | 130 | 135 | 1 | 1 | 4.68 | 4.60 | 5.74 | **52222** |
| **110** | 95 | 190 | 110 | 118.4 | 128 | 2 | 1 | **52322** | **54322** | **54322U** | 268000 | 705000 | 880 | 1300 | 189.5 | 113 | 150 | 195 | 67 | 71.2 | 76 | 24 | 20.5 | 47 | 140 | 110 | 142 | 150 | 2 | 1 | 13.8 | 13.7 | 16.3 | **52322** |
| | 90 | 230 | 166 | — | — | 3 | 1.1 | **52422** | — | — | 435000 | 1240000 | 640 | 960 | 229 | 113 | — | — | 101.5 | — | — | 37 | — | — | — | 110 | 158 | — | 2.5 | 1 | 34.9 | — | — | **52422** |
| | 100 | 170 | 68 | 71.6 | 82 | 1.1 | 1.1 | **52224** | **54224** | **54224U** | 152000 | 470000 | 1200 | 1800 | 170 | 123 | 145 | 175 | 41.5 | 43.3 | 48.5 | 15 | 15 | 58.5 | 125 | 120 | 140 | 145 | 1 | 1 | 5.24 | 5.04 | 6.36 | **52224** |
| **120** | 100 | 210 | 123 | 131.2 | 143 | 2.1 | 1.1 | **52324** | **54324** | **54324U** | 267000 | 870000 | 790 | 1100 | 209.5 | 123 | 165 | 220 | 75 | 79.1 | 85 | 27 | 22 | 58 | 160 | 120 | 156 | 165 | 2 | 1 | 17.2 | 16.9 | 21.0 | **52324** |
| | 95 | 250 | 177 | — | — | 4 | 1.5 | **52424** | — | — | 455000 | 1340000 | 580 | 880 | 249 | 123 | — | — | 108.5 | — | — | 40 | — | — | — | 120 | 172 | — | 3 | 1.5 | 44.2 | — | — | **52424** |
| | 110 | 190 | 80 | 85.8 | 96 | 1.5 | 1.1 | **52226** | **54226** | **54226U** | 203000 | 620000 | 1000 | 1500 | 189.5 | 133 | 160 | 195 | 49 | 51.9 | 57 | 18 | 17 | 63 | 140 | 130 | 154 | 160 | 1.5 | 1 | 7.72 | 7.58 | 9.43 | **52226** |
| **130** | 110 | 225 | 130 | — | — | 2.1 | 1.1 | **52326** | — | — | 330000 | 960000 | 730 | 1100 | 224 | 134 | — | — | 80 | — | — | 30 | — | — | — | 130 | 168 | — | 2 | 1 | 22.1 | — | — | **52326** |
| | 100 | 270 | 192 | — | — | 4 | 2 | **52426** | — | — | 555000 | 1750000 | 540 | 810 | 269 | 134 | — | — | 117 | — | — | 42 | — | — | — | 130 | 186 | — | 3 | 2 | 56.5 | — | — | **52426** |
| | 120 | 200 | 81 | 86.2 | 99 | 1.5 | 1.1 | **52228** | **54228** | **54228U** | 205000 | 650000 | 1000 | 1500 | 199.5 | 143 | 170 | 210 | 49.5 | 52.1 | 58.5 | 18 | 17 | 83.5 | 160 | 140 | 164 | 170 | 1.5 | 1 | 8.93 | 8.79 | 11.3 | **52228** |
| **140** | 120 | 240 | 140 | — | — | 2.1 | 1.1 | **52328** | — | — | 350000 | 1050000 | 680 | 1000 | 239 | 144 | — | — | 85.5 | — | — | 31 | — | — | — | 140 | 180 | — | 2 | 1 | 27.8 | — | — | **52328** |
| | 110 | 280 | 196 | — | — | 4 | 2 | **52428** | — | — | 545000 | 1750000 | 520 | 780 | 279 | 144 | — | — | 120 | — | — | 44 | — | — | — | 140 | 196 | — | 3 | 2 | 60.6 | — | — | **52428** |
| | 130 | 215 | 89 | 95.6 | 109 | 1.5 | 1.1 | **52230** | **54230** | **54230U** | 213000 | 650000 | 940 | 1400 | 214.5 | 153 | 180 | 225 | 54.5 | 57.8 | 64.5 | 20 | 20.5 | 74.5 | 160 | 150 | 176 | 180 | 1.5 | 1 | 10.6 | 10.3 | 13.8 | **52230** |
| **150** | 130 | 250 | 140 | — | — | 2.1 | 1.1 | **52330** | — | — | 360000 | 1130000 | 670 | 1000 | 249 | 154 | — | — | 85.5 | — | — | 31 | — | — | — | 150 | 190 | — | 2 | 1 | 29.2 | — | — | **52330** |
| | 120 | 300 | 209 | — | — | 4 | 2 | **52430** | — | — | 615000 | 2010000 | 480 | 720 | 299 | 153 | — | — | 127.5 | — | — | 46 | — | — | — | 150 | 210 | — | 3 | 2 | 73.9 | — | — | **52430** |
| | 140 | 225 | 90 | 97.4 | 110 | 1.5 | 1.1 | **52232** | **54232** | **54232U** | 223000 | 720000 | 900 | 1300 | 224.5 | 163 | 190 | 235 | 55 | 58.7 | 65 | 20 | 21 | 70 | 160 | 160 | 186 | 190 | 1.5 | 1 | 12.2 | 11.9 | 15.6 | **52232** |
| **160** | 140 | 270 | 153 | — | — | 3 | 1.1 | **52332** | — | — | 410000 | 1340000 | 610 | 920 | 269 | 164 | — | — | 93 | — | — | 33 | — | — | — | 160 | 204 | — | 2.5 | 1 | 37.7 | — | — | **52332** |
| | 130 | 320 | 226 | — | — | 5 | 2 | **52432** | — | — | 680000 | 2410000 | 440 | 670 | 319 | 164 | — | — | 138 | — | — | 50 | — | — | — | 160 | 224 | — | 4 | 2 | 90.3 | — | — | **52432** |
| | 150 | 240 | 97 | 104.4 | 117 | 1.5 | 1.1 | **52234** | **54234** | **54234U** | 261000 | 835000 | 840 | 1200 | 239.5 | 173 | 200 | 250 | 59 | 62.7 | 69 | 21 | 21.5 | 87 | 180 | 170 | 198 | 200 | 1.5 | 1 | 15.2 | 14.7 | 19.1 | **52234** |
| **170** | 150 | 280 | 153 | — | — | 3 | 1.1 | **52334** | — | — | 420000 | 1430000 | 600 | 900 | 279 | 174 | — | — | 93 | — | — | 33 | — | — | — | 170 | 214 | — | 2.5 | 1 | 39.8 | — | — | **52334** |
| | 135 | 340 | 236 | — | — | 5 | 2.1 | **52434** | — | — | 755000 | 2730000 | 420 | 630 | 339 | 174 | — | — | 143 | — | — | 50 | — | — | — | 170 | 238 | — | 4 | 2 | 108 | — | — | **52434** |

# Double-direction Thrust Ball Bearings

Bore Diameter: 180～220mm

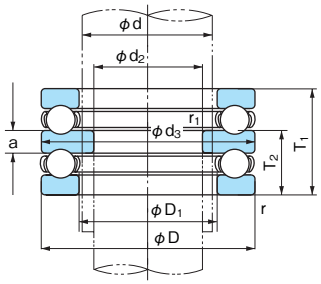


Flat back-face type

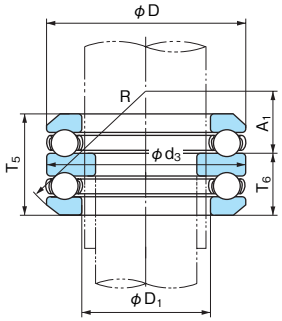


Spherical back-face type

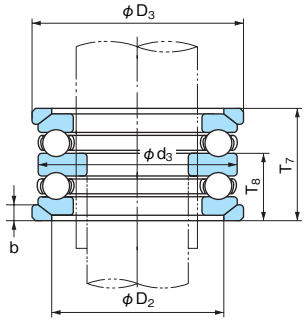


With aligning seat

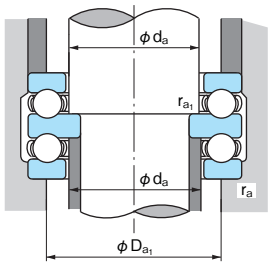


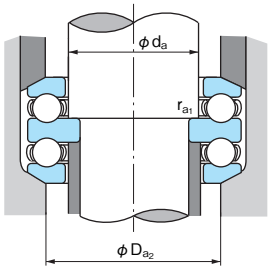


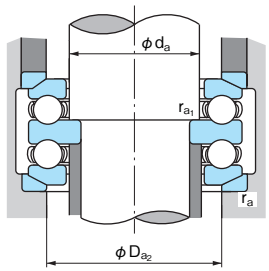


1N=0.102kgf

| Boundary dimensions (mm) | | | | | | | | Bearing No. | | | Basic dynamic load rating Ca (N) | Basic static load rating Coa (N) | Limiting speed (min⁻¹) | | Dimensions (mm) | | | | | | | | | | | Abutment and fillet dimensions (mm) | | | | | Mass (kg) Reference | | | Bearing No. |
|---|---|---|---|---|---|---|---|---|---|---|---|---|---|---|---|---|---|---|---|---|---|---|---|---|---|---|---|---|---|---|---|---|---|---|
| d | $d_2$ | D | $T_1$ | $T_5$ | $T_7$ | r (min) | $r_1$ (min) | Flat back-face type | Spherical back-face type | With aligning seat | | | Grease lubrication | Oil lubrication | $d_3$ (max) | $D_1$ (min) | $D_2$ | $D_3$ | $T_2$ | $T_6$ | $T_8$ | a | b | $A_1$ | R | da (min) | $Da_1$ (max) | $Da_2$ (max) | ra (max) | $ra_1$ (max) | Flat back-face type | Spherical back-face type | With aligning seat | |
| 180 | 150 | 250 | 98 | 102.4 | 118 | 1.5 | 2 | **52236** | **54236** | **54236U** | 266000 | 875000 | 810 | 1200 | 249 | 183 | 210 | 260 | 59.5 | 61.7 | 69.5 | 21 | 21.5 | 108.5 | 200 | 180 | 208 | 210 | 1.5 | 2 | 16.0 | 15.2 | 19.9 | **52236** |
| | 150 | 300 | 165 | — | — | 3 | 2 | **52336** | — | — | 485000 | 1700000 | 550 | 820 | 299 | 184 | — | — | 101 | — | — | 37 | — | — | — | 180 | 228 | — | 2.5 | 2 | 50.9 | — | — | **52336** |
| | 140 | 360 | 245 | — | — | 5 | 3 | **52436** | — | — | 785000 | 2980000 | 400 | 600 | 359 | 184 | — | — | 148.5 | — | — | 52 | — | — | — | 180 | 252 | — | 4 | 2.5 | 126 | — | — | **52436** |
| 190 | 160 | 270 | 109 | 116.4 | 131 | 2 | 2 | **52238** | **54238** | **54238U** | 310000 | 1060000 | 740 | 1100 | 269 | 194 | 230 | 280 | 66.5 | 70.2 | 77.5 | 24 | 23 | 93.5 | 200 | 190 | 222 | 230 | 2 | 2 | 21.6 | 21.2 | 26.5 | **52238** |
| | 160 | 320 | 183 | — | — | 4 | 2 | **52338** | — | — | 570000 | 2100000 | 500 | 750 | 319 | 195 | — | — | 111.5 | — | — | 40 | — | — | — | 190 | 242 | — | 3 | 2 | 64.9 | — | — | **52338** |
| 200 | 170 | 280 | 109 | 115.6 | 133 | 2 | 2 | **52240** | **54240** | **54240U** | 315000 | 1110000 | 720 | 1000 | 279 | 204 | 240 | 290 | 66.5 | 69.8 | 78.5 | 24 | 23 | 120.5 | 225 | 200 | 232 | 240 | 2 | 2 | 22.7 | 22.3 | 28.0 | **52240** |
| | 170 | 340 | 192 | — | — | 4 | 2 | **52340** | — | — | 625000 | 2380000 | 470 | 710 | 339 | 205 | — | — | 117 | — | — | 42 | — | — | — | 200 | 256 | — | 3 | 2 | 77.8 | — | — | **52340** |
| 220 | 190 | 300 | 110 | 115.2 | 134 | 2 | 2 | **52244** | **54244** | **54244U** | 325000 | 1210000 | 690 | 1000 | 299 | 224 | 260 | 310 | 67 | 69.6 | 79 | 24 | 25 | 114 | 225 | 220 | 252 | 260 | 2 | 2 | 23.9 | 22.9 | 29.6 | **52244** |

# Spherical Roller Thrust Bearings

Tolerance ····· Page 52
Preload ····· Page 95

Because there are many sliding surfaces in Spherical Roller Thrust Bearings (cage-to-guide-sleeve and roller-ends-to-rib), oil lubricant (not grease) should be used.

## ● Aligning angle

Maximum permissible misalignment angle is about 2° under general service conditions. If the aligning advantages of this bearing type are to be realized, care must be taken to provide clearance for parts in the surrounding structure.

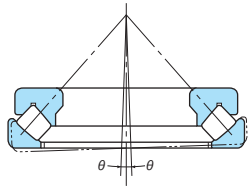


● The safety-factor "$S_o$" must be over 4.

## ● Minimum axial load

To prevent damage caused by sliding motion between the rollers and raceway, spherical roller thrust bearings must be subjected to a load more than the minimum load, Fa min.

$$F_{a\,min} = \frac{C_{oa}}{1000}$$

# Spherical Roller Thrust Bearings

Bore Diameter: 60～130mm

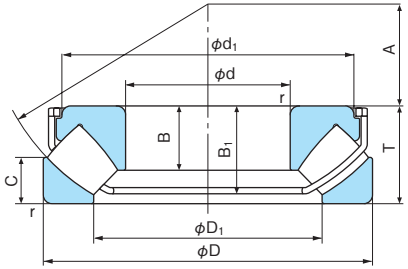


Type EX

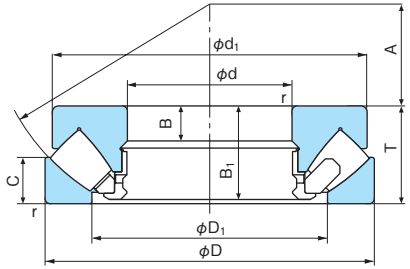


Type E

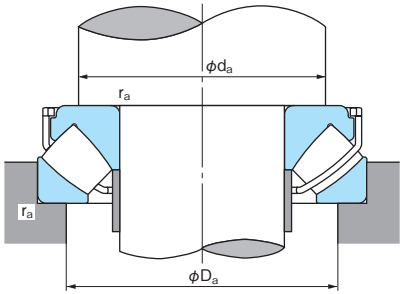


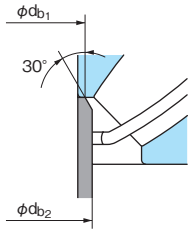


**■Dynamic equivalent axial load**

Pa=Fa+1.2Fr

**■Static equivalent axial load**

Poa=Fa+2.7Fr

where, Fa: Axial load

Fr : Radial load

However $\frac{Fr}{Fa} \leqq 0.55$

However Fr/Fa ≦0.55 must be satisfied

1N=0.102kgf

| Boundary dimensions (mm) | | | | Bearing No. | Basic dynamic load rating Ca (N) | Basic static load rating Coa (N) | Limiting speed (min⁻¹) | | Reference Dimensions (mm) | | | | | | Abutment and fillet dimensions (mm) | | | Spacer dimensions (mm) | | Mass (kg) (Reference) | Bearing No. |
|---|---|---|---|---|---|---|---|---|---|---|---|---|---|---|---|---|---|---|---|---|---|
| d | D | T | r (min) | | | | Grease lubrication | Oil lubrication | $d_1$ | $D_1$ | B | $B_1$ | C | A | $d_a$ (min) | $D_a$ (max) | $r_a$ (max) | $d_{b1}$ (max) | $d_{b2}$ (max) | | |
| 60 | 130 | 42 | 1.5 | **29412E** | 299000 | 890000 | — | 2800 | 123 | 89 | 15 | 39.5 | 20 | 38 | 91 | 108 | 1.5 | — | — | 2.75 | **29412E** |
| | 130 | 42 | 1.5 | **29412EX** | 350000 | 915000 | 1800 | 2800 | 113 | 87 | 27 | 37.1 | 20 | 38 | 91 | 108 | 1.5 | 66.0 | 66.0 | 2.50 | **29412EX** |
| 65 | 140 | 45 | 2 | **29413E** | 345000 | 1040000 | — | 2700 | 133 | 96 | 16 | 42.5 | 21 | 42 | 99 | 115 | 2.0 | — | — | 3.41 | **29413E** |
| | 140 | 45 | 2 | **29413EX** | 410000 | 1110000 | 1700 | 2700 | 123 | 93.5 | 29.5 | 40 | 21 | 42 | 99 | 115 | 2.0 | 72.0 | 72.0 | 3.20 | **29413EX** |
| 70 | 150 | 48 | 2 | **29414E** | 375000 | 1110000 | — | 2400 | 142 | 103 | 17 | 45.5 | 23 | 44 | 106 | 125 | 2.0 | — | — | 4.16 | **29414E** |
| | 150 | 48 | 2 | **29414EX** | 490000 | 1350000 | 1600 | 2400 | 128.3 | 98.4 | 32 | 42.7 | 23 | 44 | 106 | 125 | 2.0 | 75.5 | 77.5 | 3.82 | **29414EX** |
| 75 | 160 | 51 | 2 | **29415E** | 445000 | 1380000 | — | 2300 | 152 | 109 | 18 | 48 | 24 | 47 | 113 | 132 | 2.0 | — | — | 4.98 | **29415E** |
| | 160 | 51 | 2 | **29415EX** | 525000 | 1470000 | 1600 | 2300 | 140 | 105.6 | 34.5 | 45.6 | 24 | 47 | 113 | 132 | 2.0 | 82.5 | 82.5 | 4.70 | **29415EX** |
| 80 | 170 | 54 | 2.1 | **29416E** | 480000 | 1490000 | — | 2100 | 162 | 117 | 19 | 51 | 26 | 50 | 120 | 140 | 2.0 | — | — | 5.95 | **29416E** |
| | 170 | 54 | 2.1 | **29416EX** | 580000 | 1630000 | 1500 | 2100 | 149 | 113 | 36 | 48.2 | 26 | 50 | 120 | 140 | 2.0 | 88.0 | 88.0 | 5.60 | **29416EX** |
| 85 | 150 | 39 | 1.5 | **29317E** | 293000 | 990000 | — | 2700 | 143.5 | 114 | 13 | 37 | 19 | 50 | 115 | 135 | 1.5 | — | — | 2.87 | **29317E** |
| | 150 | 39 | 1.5 | **29317EX** | 365000 | 1060000 | 1600 | 2700 | 134 | 110.5 | 25 | 35 | 19 | 50 | 115 | 135 | 1.5 | 90.0 | 90.0 | 2.67 | **29317EX** |
| | 180 | 58 | 2.1 | **29417E** | 540000 | 1720000 | — | 2000 | 170 | 125 | 21 | 55 | 28 | 54 | 130 | 150 | 2.0 | — | — | 7.19 | **29417E** |
| | 180 | 58 | 2.1 | **29417EX** | 640000 | 1810000 | 1300 | 2000 | 158.2 | 120.5 | 37 | 50.6 | 28 | 54 | 130 | 150 | 2.0 | 94.0 | 94.0 | 6.69 | **29417EX** |
| 90 | 155 | 39 | 1.5 | **29318E** | 300000 | 1040000 | — | 2700 | 148.5 | 117 | 13 | 37 | 19 | 52 | 120 | 140 | 1.5 | — | — | 3.06 | **29318E** |
| | 155 | 39 | 1.5 | **29318EX** | 355000 | 1070000 | 1600 | 2700 | 135.2 | 116 | 23.8 | 35.1 | 19 | 52 | 120 | 140 | 1.5 | 95.0 | 95.0 | 2.75 | **29318EX** |
| | 190 | 60 | 2.1 | **29418E** | 620000 | 2020000 | — | 1900 | 180 | 132 | 22 | 57 | 29 | 56 | 135 | 157 | 2.0 | — | — | 8.28 | **29418E** |
| | 190 | 60 | 2.1 | **29418EX** | 710000 | 2080000 | 1300 | 1900 | 162 | 127 | 40.5 | 53 | 29 | 56 | 135 | 157 | 2.0 | 99.0 | 99.0 | 7.83 | **29418EX** |
| 100 | 170 | 42 | 1.5 | **29320E** | 355000 | 1260000 | — | 2500 | 163 | 129 | 14 | 40 | 20.8 | 58 | 130 | 150 | 1.5 | — | — | 3.91 | **29320E** |
| | 170 | 42 | 1.5 | **29320EX** | 435000 | 1400000 | 1500 | 2500 | 146.9 | 126 | 27 | 38.2 | 20.8 | 58 | 130 | 150 | 1.5 | 105.0 | 107.0 | 3.61 | **29320EX** |
| | 210 | 67 | 3 | **29420E** | 690000 | 2230000 | — | 1700 | 200 | 146 | 24 | 64 | 32 | 62 | 150 | 175 | 2.5 | — | — | 11.2 | **29420E** |
| | 210 | 67 | 3 | **29420EX** | 870000 | 2530000 | 1100 | 1700 | 181 | 139 | 44.5 | 59.6 | 32 | 62 | 150 | 175 | 2.5 | 108.0 | 110.0 | 10.6 | **29420EX** |
| 110 | 190 | 48 | 2 | **29322E** | 470000 | 1680000 | — | 2100 | 182 | 143 | 16 | 45.5 | 23 | 64 | 145 | 165 | 2.0 | — | — | 5.67 | **29322E** |
| | 190 | 48 | 2 | **29322EX** | 550000 | 1730000 | 1300 | 2100 | 165.1 | 140.6 | 30.9 | 44 | 23 | 64 | 145 | 165 | 2.0 | 116.0 | 117.0 | 5.22 | **29322EX** |
| | 230 | 73 | 3 | **29422E** | 845000 | 2820000 | — | 1500 | 220 | 162 | 26 | 69 | 35 | 69 | 165 | 190 | 2.5 | — | — | 14.7 | **29422E** |
| | 230 | 73 | 3 | **29422EX** | 1060000 | 3150000 | 950 | 1500 | 199.6 | 153.4 | 48 | 64.4 | 35 | 69 | 165 | 190 | 2.5 | 119.5 | 120.0 | 14.0 | **29422EX** |
| 120 | 210 | 54 | 2.1 | **29324E** | 565000 | 2030000 | — | 1900 | 200 | 159 | 18 | 51 | 26 | 70 | 160 | 180 | 2.0 | — | — | 7.90 | **29324E** |
| | 210 | 54 | 2.1 | **29324EX** | 670000 | 2160000 | 1100 | 1900 | 184.5 | 155 | 34.5 | 48.7 | 26 | 70 | 160 | 180 | 2.0 | 127.0 | 128.0 | 7.30 | **29324EX** |
| | 250 | 78 | 4 | **29424E** | 1030000 | 3450000 | — | 1400 | 236 | 174 | 29 | 74 | 37 | 74 | 180 | 205 | 3.0 | — | — | 18.5 | **29424E** |
| | 250 | 78 | 4 | **29424EX** | 1210000 | 3750000 | 900 | 1400 | 218 | 166.5 | 54 | 70.9 | 37 | 74 | 180 | 205 | 3.0 | 131.0 | 132.0 | 17.6 | **29424EX** |
| 130 | 225 | 58 | 2.1 | **29326E** | 665000 | 2420000 | — | 1800 | 215 | 171 | 19 | 55 | 28 | 76 | 170 | 195 | 2.0 | — | — | 9.45 | **29326E** |
| | 225 | 58 | 2.1 | **29326EX** | 770000 | 2440000 | 1000 | 1800 | 197.4 | 165.8 | 36.8 | 52.7 | 28 | 76 | 170 | 195 | 2.0 | 136.0 | 138.0 | 8.82 | **29326EX** |
| | 270 | 85 | 4 | **29426E** | 1140000 | 3850000 | — | 1200 | 255 | 189 | 31 | 81 | 41 | 81 | 195 | 225 | 3.0 | — | — | 23.5 | **29426E** |
| | 270 | 85 | 4 | **29426EX** | 1400000 | 4300000 | 850 | 1200 | 236.4 | 181 | 56 | 75 | 41 | 81 | 195 | 225 | 3.0 | 141.5 | 143.0 | 22.3 | **29426EX** |

Note: For heavy load application, $d_a$ should be large enough to support the shaft washer rib.

# Spherical Roller Thrust Bearings

Bore Diameter: 140～240mm

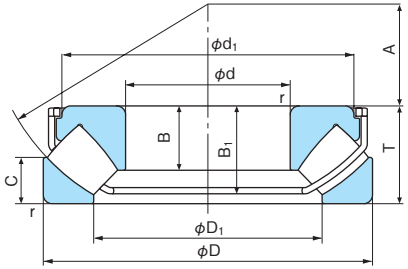


Type EX

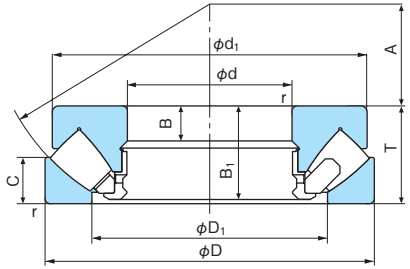


Type E

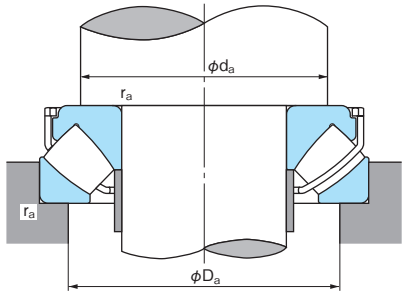


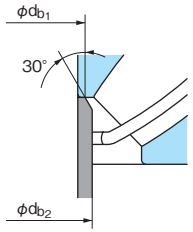


**■Dynamic equivalent axial load**

Pa=Fa+1.2Fr

**■Static equivalent axial load**

Poa=Fa+2.7Fr

where, Fa: Axial load

Fr : Radial load

However $\frac{Fr}{Fa} \leqq 0.55$

However Fr/Fa ≦0.55 must be satisfied

1N=0.102kgf

| Boundary dimensions (mm) | | | | Bearing No. | Basic dynamic load rating Ca (N) | Basic static load rating Coa (N) | Limiting speed (min-1) | | Reference Dimensions (mm) | | | | | | Abutment and fillet dimensions (mm) | | | Spacer dimensions (mm) | | Mass (kg) (Reference) | Bearing No. |
|---|---|---|---|---|---|---|---|---|---|---|---|---|---|---|---|---|---|---|---|---|---|
| d | D | T | r (min) | | | | Grease lubrication | Oil lubrication | $d_1$ | $D_1$ | B | $B_1$ | C | A | $d_a$ (min) | $D_a$ (max) | $r_a$ (max) | $db_1$ (max) | $db_2$ (max) | | |
| 140 | 240 | 60 | 2.1 | **29328E** | 700000 | 2560000 | — | 1600 | 230 | 183 | 20 | 57 | 29 | 82 | 185 | 205 | 2.0 | — | — | 11.2 | **29328E** |
| | 240 | 60 | 2.1 | **29328EX** | 860000 | 2840000 | 950 | 1600 | 218.4 | 179 | 38.5 | 54.8 | 29 | 82 | 185 | 205 | 2.0 | 147.5 | 149.0 | 10.5 | **29328EX** |
| | 280 | 85 | 4 | **29428E** | 1200000 | 4050000 | — | 1200 | 268 | 199 | 31 | 81 | 41 | 86 | 205 | 235 | 3.0 | — | — | 24.6 | **29428E** |
| | 280 | 85 | 4 | **29428EX** | 1410000 | 4350000 | 850 | 1200 | 246 | 196 | 53.6 | 74.4 | 41 | 86 | 205 | 235 | 3.0 | 153.0 | 160.0 | 22.8 | **29428EX** |
| 150 | 215 | 39 | 1.5 | **29230E** | 335000 | 1390000 | — | 2100 | 208 | 178 | 14 | 37 | 19 | 82 | 179 | 196 | 1.5 | — | — | 4.60 | **29230E** |
| | 250 | 60 | 2.1 | **29330E** | 735000 | 2840000 | — | 1600 | 240 | 194 | 20 | 57 | 29 | 87 | 195 | 215 | 2.0 | — | — | 11.7 | **29330E** |
| | 300 | 90 | 4 | **29430E** | 1330000 | 4600000 | — | 1100 | 285 | 214 | 32 | 86 | 44 | 92 | 220 | 250 | 3.0 | — | — | 29.6 | **29430E** |
| | 300 | 90 | 4 | **29430EX** | 1630000 | 5150000 | 800 | 1100 | 265.4 | 207.5 | 58.5 | 80.8 | 44 | 92 | 220 | 250 | 3.0 | 163.0 | 169.0 | 27.8 | **29430EX** |
| 160 | 225 | 39 | 1.5 | **29232E** | 345000 | 1470000 | — | 2100 | 219 | 188 | 14 | 37 | 19 | 85 | 189 | 206 | 1.5 | — | — | 4.70 | **29232E** |
| | 270 | 67 | 3 | **29332E** | 880000 | 3400000 | — | 1400 | 260 | 208 | 23 | 64 | 32 | 92 | 210 | 235 | 2.5 | — | — | 15.5 | **29332E** |
| | 270 | 67 | 3 | **29332EX** | 1040000 | 3500000 | 850 | 1400 | 243.4 | 199.8 | 44 | 61.4 | 32 | 92 | 210 | 235 | 2.5 | 166.0 | 174.0 | 14.5 | **29332EX** |
| | 320 | 95 | 5 | **29432E** | 1510000 | 5350000 | — | 1000 | 306 | 229 | 34 | 91 | 45 | 99 | 230 | 265 | 4.0 | — | — | 35.9 | **29432E** |
| | 320 | 95 | 5 | **29432EX** | 1820000 | 5750000 | 750 | 1000 | 283.8 | 222 | 62.5 | 85.7 | 45 | 99 | 230 | 265 | 4.0 | 174.5 | 181.0 | 33.4 | **29432EX** |
| 170 | 240 | 42 | 1.5 | **29234E** | 390000 | 1700000 | — | 1900 | 233 | 198 | 15 | 40 | 20 | 92 | 201 | 218 | 1.5 | — | — | 6.00 | **29234E** |
| | 280 | 67 | 3 | **29334E** | 900000 | 3550000 | — | 1400 | 270 | 216 | 23 | 64 | 32 | 96 | 220 | 245 | 2.5 | — | — | 16.3 | **29334E** |
| | 340 | 103 | 5 | **29434E** | 1670000 | 5900000 | — | 950 | 324 | 243 | 37 | 99 | 50 | 104 | 245 | 285 | 4.0 | — | — | 44.0 | **29434E** |
| 180 | 250 | 42 | 1.5 | **29236E** | 420000 | 1900000 | — | 1900 | 243 | 208 | 15 | 40 | 21 | 95 | 211 | 228 | 1.5 | — | — | 6.30 | **29236E** |
| | 300 | 73 | 3 | **29336E** | 1020000 | 3950000 | — | 1300 | 290 | 232 | 25 | 69 | 35 | 103 | 235 | 260 | 2.5 | — | — | 20.7 | **29336E** |
| | 360 | 109 | 5 | **29436E** | 1950000 | 7000000 | — | 860 | 342 | 255 | 39 | 105 | 52 | 110 | 260 | 300 | 4.0 | — | — | 52.2 | **29436E** |
| 190 | 270 | 48 | 2 | **29238E** | 540000 | 2300000 | — | 1800 | 262 | 223 | 15 | 45 | 24 | 104 | 225 | 245 | 2.0 | — | — | 8.50 | **29238E** |
| | 320 | 78 | 4 | **29338E** | 1170000 | 4550000 | — | 1100 | 308 | 246 | 27 | 74 | 38 | 110 | 250 | 275 | 3.0 | — | — | 25.5 | **29338E** |
| | 380 | 115 | 5 | **29438E** | 2120000 | 7750000 | — | 800 | 360 | 271 | 41 | 111 | 55 | 117 | 275 | 320 | 4.0 | — | — | 61.4 | **29438E** |
| 200 | 280 | 48 | 2 | **29240E** | 550000 | 2410000 | — | 1800 | 271 | 236 | 15 | 45 | 24 | 108 | 235 | 255 | 2.0 | — | — | 9.08 | **29240E** |
| | 340 | 85 | 4 | **29340E** | 1350000 | 5250000 | — | 1000 | 325 | 261 | 29 | 81 | 41 | 116 | 265 | 295 | 3.0 | — | — | 32.0 | **29340E** |
| | 400 | 122 | 5 | **29440E** | 2350000 | 8450000 | — | 740 | 380 | 286 | 43 | 117 | 59 | 122 | 290 | 335 | 4.0 | — | — | 73.0 | **29440E** |
| 220 | 300 | 48 | 2 | **29244E** | 595000 | 2750000 | — | 1600 | 292 | 254 | 15 | 45 | 24 | 117 | 260 | 275 | 2.0 | — | — | 9.84 | **29244E** |
| | 360 | 85 | 4 | **29344E** | 1410000 | 5750000 | — | 1000 | 345 | 280 | 29 | 81 | 41 | 125 | 285 | 315 | 3.0 | — | — | 34.5 | **29344E** |
| | 420 | 122 | 6 | **29444E** | 2410000 | 8950000 | — | 720 | 400 | 308 | 43 | 117 | 58 | 132 | 310 | 355 | 5.0 | — | — | 74.2 | **29444E** |
| 240 | 340 | 60 | 2.1 | **29248E** | 890000 | 4000000 | — | 1300 | 330 | 283 | 19 | 57 | 30 | 130 | 285 | 305 | 2.0 | — | — | 17.1 | **29248E** |
| | 380 | 85 | 4 | **29348E** | 1410000 | 5850000 | — | 980 | 365 | 300 | 29 | 81 | 41 | 135 | 300 | 330 | 3.0 | — | — | 36.3 | **29348E** |
| | 440 | 122 | 6 | **29448E** | 2480000 | 9450000 | — | 720 | 420 | 326 | 43 | 117 | 59 | 142 | 330 | 375 | 5.0 | — | — | 83.0 | **29448E** |

Note: For heavy load application, $d_a$ should be large enough to support the shaft washer rib.

# Spherical Roller Thrust Bearings

Bore Diameter: 260～460mm

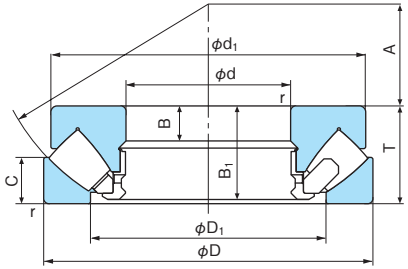


Type E

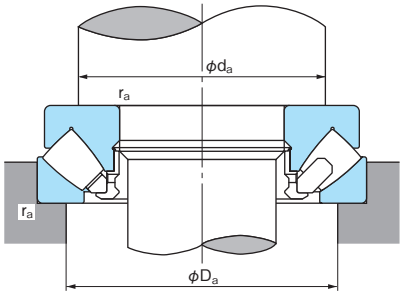


■**Dynamic equivalent axial load**

Pa=Fa+1.2Fr

■**Static equivalent axial load**

Poa=Fa+2.7Fr

where, Fa: Axial load

Fr : Radial load

However $\frac{Fr}{Fa} \leqq 0.55$

However Fr/Fa ≦0.55 must be satisfied

1N=0.102kgf

| Boundary dimensions (mm) | | | | Bearing No. | Basic dynamic load rating Ca (N) | Basic static load rating Coa (N) | Limiting speed (min-1) | | Reference Dimensions (mm) | | | | | | Abutment and fillet dimensions (mm) | | | Spacer dimensions (mm) | | Mass (kg) (Reference) | Bearing No. |
|---|---|---|---|---|---|---|---|---|---|---|---|---|---|---|---|---|---|---|---|---|---|
| d | D | T | r (min) | | | | Grease lubrication | Oil lubrication | $d_1$ | $D_1$ | B | $B_1$ | C | A | $d_a$ (min) | $D_a$ (max) | $r_a$ (max) | $db_1$ (max) | $db_2$ (max) | | |
| 260 | 360 | 60 | 2.1 | **29252E** | 915000 | 4250000 | — | 1300 | 350 | 302 | 19 | 57 | 30 | 139 | 305 | 325 | 2.0 | — | — | 18.5 | **29252E** |
| | 420 | 95 | 5 | **29352E** | 1810000 | 7500000 | — | 860 | 405 | 329 | 32 | 91 | 45 | 148 | 330 | 365 | 4.0 | — | — | 51.5 | **29352E** |
| | 480 | 132 | 6 | **29452E** | 2940000 | 11600000 | — | 640 | 460 | 357 | 48 | 127 | 64 | 154 | 360 | 405 | 5.0 | — | — | 106 | **29452E** |
| 280 | 380 | 60 | 2.1 | **29256E** | 935000 | 4500000 | — | 1200 | 370 | 323 | 19 | 57 | 30 | 150 | 325 | 345 | 2.0 | — | — | 19.5 | **29256E** |
| | 440 | 95 | 5 | **29356E** | 1850000 | 7950000 | — | 840 | 423 | 348 | 32 | 91 | 46 | 158 | 350 | 390 | 4.0 | — | — | 54.0 | **29356E** |
| | 520 | 145 | 6 | **29456E** | 3450000 | 13500000 | — | 580 | 495 | 387 | 52 | 140 | 68 | 166 | 390 | 440 | 5.0 | — | — | 137 | **29456E** |
| 300 | 420 | 73 | 3 | **29260E** | 1220000 | 5850000 | — | 1000 | 405 | 353 | 21 | 69 | 38 | 162 | 355 | 380 | 2.5 | — | — | 31.0 | **29260E** |
| | 480 | 109 | 5 | **29360E** | 2310000 | 10000000 | — | 720 | 460 | 379 | 37 | 105 | 50 | 168 | 380 | 420 | 4.0 | — | — | 75.4 | **29360E** |
| | 540 | 145 | 6 | **29460E** | 3650000 | 14800000 | — | 540 | 515 | 402 | 52 | 140 | 70 | 175 | 410 | 460 | 5.0 | — | — | 146 | **29460E** |
| 320 | 440 | 73 | 3 | **29264E** | 1270000 | 6150000 | — | 980 | 430 | 372 | 21 | 69 | 38 | 172 | 375 | 400 | 2.5 | — | — | 32.8 | **29264E** |
| | 500 | 109 | 5 | **29364E** | 2370000 | 10600000 | — | 720 | 482 | 399 | 37 | 105 | 53 | 180 | 400 | 440 | 4.0 | — | — | 80.0 | **29364E** |
| | 580 | 155 | 7.5 | **29464E** | 4050000 | 16800000 | — | 480 | 555 | 435 | 55 | 149 | 75 | 191 | 435 | 495 | 6.0 | — | — | 179 | **29464E** |
| 340 | 460 | 73 | 3 | **29268E** | 1290000 | 6350000 | — | 950 | 445 | 395 | 21 | 69 | 37 | 183 | 395 | 420 | 2.5 | — | — | 34.5 | **29268E** |
| | 540 | 122 | 5 | **29368E** | 2850000 | 12400000 | — | 630 | 520 | 428 | 41 | 117 | 59 | 192 | 430 | 470 | 4.0 | — | — | 106 | **29368E** |
| | 620 | 170 | 7.5 | **29468E** | 4750000 | 19300000 | — | 430 | 590 | 462 | 61 | 164 | 82 | 201 | 465 | 530 | 6.0 | — | — | 228 | **29468E** |
| 360 | 500 | 85 | 4 | **29272E** | 1650000 | 8050000 | — | 830 | 485 | 423 | 25 | 81 | 44 | 194 | 420 | 455 | 3.0 | — | — | 50.4 | **29272E** |
| | 560 | 122 | 5 | **29372E** | 2900000 | 12900000 | — | 600 | 540 | 448 | 41 | 117 | 59 | 202 | 450 | 495 | 4.0 | — | — | 111 | **29372E** |
| | 640 | 170 | 7.5 | **29472E** | 4900000 | 20500000 | — | 410 | 610 | 480 | 61 | 164 | 82 | 210 | 485 | 550 | 6.0 | — | — | 234 | **29472E** |
| 380 | 520 | 85 | 4 | **29276E** | 1780000 | 8800000 | — | 800 | 505 | 441 | 27 | 81 | 42 | 202 | 440 | 475 | 3.0 | — | — | 52.8 | **29276E** |
| | 600 | 132 | 6 | **29376E** | 3400000 | 15300000 | — | 540 | 580 | 477 | 44 | 127 | 63 | 216 | 480 | 525 | 5.0 | — | — | 140 | **29376E** |
| | 670 | 175 | 7.5 | **29476E** | 5200000 | 22000000 | — | 400 | 640 | 504 | 63 | 168 | 85 | 230 | 510 | 575 | 6.0 | — | — | 263 | **29476E** |
| 400 | 540 | 85 | 4 | **29280E** | 1840000 | 9250000 | — | 800 | 526 | 460 | 27 | 81 | 42 | 212 | 460 | 490 | 3.0 | — | — | 55.1 | **29280E** |
| | 620 | 132 | 6 | **29380E** | 3550000 | 16300000 | — | 530 | 596 | 494 | 44 | 127 | 64 | 225 | 500 | 550 | 5.0 | — | — | 146 | **29380E** |
| | 710 | 185 | 7.5 | **29480E** | 5850000 | 25000000 | — | 360 | 680 | 534 | 67 | 178 | 89 | 236 | 540 | 610 | 6.0 | — | — | 314 | **29480E** |
| 420 | 580 | 95 | 5 | **29284E** | 2260000 | 11300000 | — | 700 | 564 | 489 | 30 | 91 | 46 | 225 | 490 | 525 | 4.0 | — | — | 74.9 | **29284E** |
| | 650 | 140 | 6 | **29384E** | 3900000 | 17900000 | — | 480 | 626 | 520 | 48 | 135 | 68 | 235 | 525 | 575 | 5.0 | — | — | 170 | **29384E** |
| | 730 | 185 | 7.5 | **29484E** | 6050000 | 26000000 | — | 360 | 700 | 556 | 67 | 178 | 89 | 244 | 560 | 630 | 6.0 | — | — | 325 | **29484E** |
| 440 | 600 | 95 | 5 | **29288E** | 2290000 | 11800000 | — | 660 | 585 | 508 | 30 | 91 | 49 | 235 | 510 | 545 | 4.0 | — | — | 79.0 | **29288E** |
| | 680 | 145 | 6 | **29388E** | 4050000 | 19000000 | — | 450 | 655 | 548 | 49 | 140 | 70 | 245 | 550 | 600 | 5.0 | — | — | 192 | **29388E** |
| | 780 | 206 | 9.5 | **29488E** | 6950000 | 30000000 | — | 300 | 745 | 588 | 74 | 199 | 100 | 260 | 595 | 670 | 8.0 | — | — | 421 | **29488E** |
| 460 | 620 | 95 | 5 | **29292E** | 2290000 | 11900000 | — | 660 | 605 | 530 | 30 | 91 | 46 | 245 | 530 | 570 | 4.0 | — | — | 80.9 | **29292E** |
| | 710 | 150 | 6 | **29392E** | 4600000 | 21700000 | — | 430 | 685 | 567 | 51 | 144 | 72 | 257 | 575 | 630 | 5.0 | — | — | 216 | **29392E** |
| | 800 | 206 | 9.5 | **29492E** | 7150000 | 31500000 | — | 290 | 765 | 608 | 74 | 199 | 100 | 272 | 615 | 690 | 8.0 | — | — | 435 | **29492E** |

Note: For heavy load application, $d_a$ should be large enough to support the shaft washer rib.

# Spherical Roller Thrust Bearings

Bore Diameter: 480～530mm

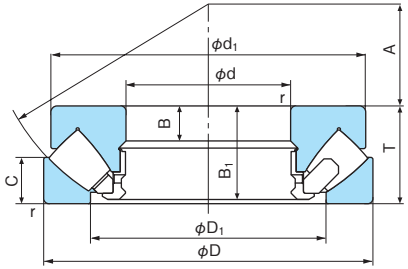


Type E

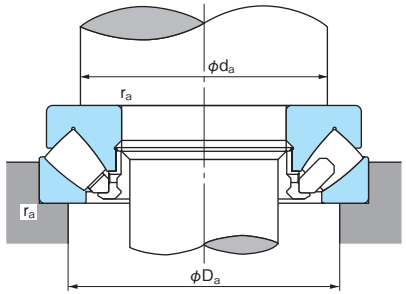


■**Dynamic equivalent axial load**

Pa=Fa+1.2Fr

■**Static equivalent axial load**

Poa=Fa+2.7Fr

where, Fa: Axial load

Fr : Radial load

However $\frac{Fr}{Fa} \leqq 0.55$

However Fr/Fa ≦0.55 must be satisfied

1N=0.102kgf

| Boundary dimensions (mm) | | | | Bearing No. | Basic dynamic load rating Ca (N) | Basic static load rating Coa (N) | Limiting speed (min-1) | | Reference Dimensions (mm) | | | | | | Abutment and fillet dimensions (mm) | | | Spacer dimensions (mm) | | Mass (kg) (Reference) | Bearing No. |
|---|---|---|---|---|---|---|---|---|---|---|---|---|---|---|---|---|---|---|---|---|---|
| d | D | T | r (min) | | | | Grease lubrication | Oil lubrication | $d_1$ | $D_1$ | B | $B_1$ | C | A | $d_a$ (min) | $D_a$ (max) | $r_a$ (max) | $db_1$ (max) | $db_2$ (max) | | |
| 480 | 650 | 103 | 5 | **29296E** | 2530000 | 13200000 | — | 600 | 635 | 556 | 33 | 99 | 55 | 259 | 555 | 595 | 4.0 | — | — | 97.5 | **29296E** |
| | 730 | 150 | 6 | **29396E** | 4630000 | 21900000 | — | 410 | 705 | 590 | 51 | 144 | 72 | 270 | 595 | 650 | 5.0 | — | — | 224 | **29396E** |
| | 850 | 224 | 9.5 | **29496E** | 8250000 | 36000000 | — | 260 | 810 | 638 | 81 | 216 | 108 | 280 | 645 | 730 | 8.0 | — | — | 543 | **29496E** |
| 500 | 670 | 103 | 5 | **292/500E** | 2590000 | 13800000 | — | 600 | 654 | 574 | 33 | 99 | 55 | 268 | 575 | 615 | 4.0 | — | — | 101 | **292/500E** |
| | 750 | 150 | 6 | **293/500E** | 4700000 | 22600000 | — | 410 | 725 | 611 | 51 | 144 | 74 | 280 | 615 | 670 | 5.0 | — | — | 231 | **293/500E** |
| | 870 | 224 | 9.5 | **294/500E** | 8250000 | 35000000 | — | 250 | 830 | 661 | 81 | 216 | 107 | 290 | 670 | 750 | 8.0 | — | — | 559 | **294/500E** |
| 530 | 710 | 109 | 5 | **292/530E** | 2820000 | 15100000 | — | 540 | 692 | 612 | 35 | 105 | 57 | 288 | 615 | 653 | 4.0 | — | — | 106 | **292/530E** |

Note: For heavy load application, $d_a$ should be large enough to support the shaft washer rib.

NACHI

# Precision Machine Tool Bearings

Bearings selected for use in machine tools are required to have a design which will ensure high rotational speed and high accuracy.

## Bearings for Machine Tool Spindles

Spindle bearings are generally classified as those that support radial load and those that support thrust loads.

**Angular Contact Ball Bearings**

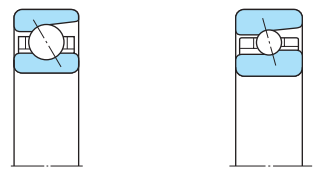

| | |
|---|---|
| 70, 70B, 70C<br>72, 72B, 72C | BNH000 |
| See page 166 | See page 369 |

**Cylindrical Roller Bearings**

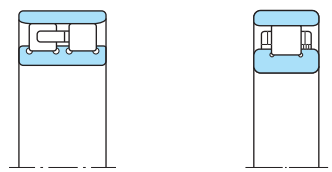

| | |
|---|---|
| NN30<br>NN30K | N10<br>N10K |
| See page 202 | See page 202 |

**Fig 1. The bearings for radial load**

**Double-direction Thrust Angular Contact Ball Bearings**

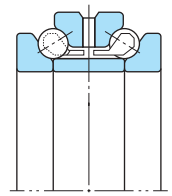

| |
|---|
| TAD20 |
| See page 373 |

**Combination Angular Contact Ball Bearings**

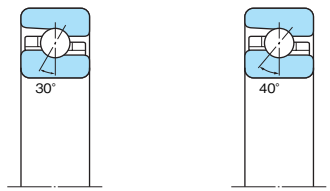


| | |
|---|---|
| TAH10T | TBH10T |
| See page 375 | See page 376 |

**Fig 2. The bearings for axial load**

# High-speed Angular Contact Ball Bearings
## BNH000 Series

## (1) High-speed Angular Contact Ball Bearings - BNH000 Series

### ● Feature design

BNH000 Series bearings are designed with smaller balls than Angular Contact Ball Bearings Type C. They are suitable for high-speed applications and lower heat generation and are typically used in high speed machining center spindles. (Their tolerance class is JIS (ISO) class 4 normally.)

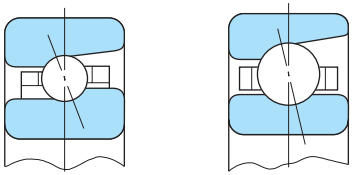

BNH000 7000C

### ● Standard preload

Standard preload of BNH type is designed with light preload.

Unit: N

| Bore Diameter Number | BNH000 |
|---|---|
| 07 | 78.5 |
| 08<br>09<br>10 | 98.1 |
| 11<br>12<br>13 | 147 |
| 14<br>15 | 245 |
| 16<br>17 | 294 |
| 18<br>19<br>20 | 392 |
| 21 | 490 |
| 22<br>24 | 588 |
| 26 | 785 |
| 28 | 834 |
| 30 | 1080 |
| 32 | 1180 |
| 34 | 1370 |

### ● Bearing No.

BNH 0 10 T DB /GL P4

- P4: Tolerance class
  - P4: class 4 (standard)
  - P2: class 2
- /GL: Preload
  - L: standard preload
- DB: Combination
  - DB: back-to-back
  - DF: face-to-face
  - DT: tandem
- T: Material of cage
  - T: phenolic resin
- 10: Bore diameter number
- 0: Dimension series number
  - 0: dimension series 10
- BNH: Bearing type





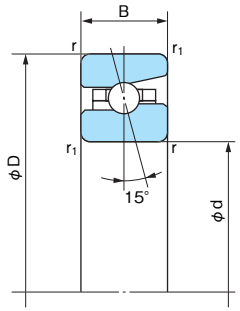


1N=0.102kgf

| Bearing No. | Dimensions (mm) | | | | | Basic dynamic load rating Cr (N) | Basic static load rating Cor (N) | Limiting speed (min⁻¹) | |
|---|---|---|---|---|---|---|---|---|---|
| | d | D | B | r (min) | r1 (min) | | | Grease lubrication | Oil lubrication |
| BNH 007 | 35 | 62 | 14 | 1 | 0.6 | 11600 | 9950 | 25000 | 35000 |
| BNH 008 | 40 | 68 | 15 | 1 | 0.6 | 14800 | 12900 | 22000 | 32000 |
| BNH 009 | 45 | 75 | 16 | 1 | 0.6 | 15500 | 14500 | 20000 | 28000 |
| BNH 010 | 50 | 80 | 16 | 1 | 0.6 | 16100 | 15900 | 19000 | 26000 |
| BNH 011 | 55 | 90 | 18 | 1 | 0.6 | 20000 | 20100 | 17000 | 24000 |
| BNH 012 | 60 | 95 | 18 | 1.1 | 0.6 | 20800 | 21900 | 16000 | 22000 |
| BNH 013 | 65 | 100 | 18 | 1.1 | 0.6 | 21500 | 23400 | 15000 | 21000 |
| BNH 014 | 70 | 110 | 20 | 1.1 | 0.6 | 29400 | 31500 | 13000 | 19000 |
| BNH 015 | 75 | 115 | 20 | 1.1 | 0.6 | 29800 | 32500 | 13000 | 18000 |
| BNH 016 | 80 | 125 | 22 | 1.1 | 0.6 | 35000 | 39000 | 12000 | 17000 |
| BNH 017 | 85 | 130 | 22 | 1.1 | 0.6 | 35500 | 40000 | 11000 | 16000 |
| BNH 018 | 90 | 140 | 24 | 1.5 | 1 | 46500 | 53000 | 10000 | 15000 |
| BNH 019 | 95 | 145 | 24 | 1.5 | 1 | 47000 | 55000 | 10000 | 14000 |
| BNH 020 | 100 | 150 | 24 | 1.5 | 1 | 48000 | 56500 | 9600 | 14000 |
| BNH 021 | 105 | 160 | 26 | 2 | 1 | 54500 | 65000 | 9100 | 13000 |
| BNH 022 | 110 | 170 | 28 | 2 | 1 | 61000 | 74000 | 8600 | 12000 |
| BNH 024 | 120 | 180 | 28 | 2 | 1 | 63000 | 79000 | 8000 | 11000 |
| BNH 026 | 130 | 200 | 33 | 2 | 1 | 83500 | 105000 | 7300 | 10000 |
| BNH 028 | 140 | 210 | 33 | 2 | 1 | 86000 | 112000 | 6900 | 9700 |
| BNH 030 | 150 | 225 | 35 | 2.1 | 1 | 102000 | 132000 | 6400 | 9100 |
| BNH 032 | 160 | 240 | 38 | 2.1 | 1 | 110000 | 145000 | 6000 | 8500 |
| BNH 034 | 170 | 260 | 42 | 2.1 | 1 | 129000 | 173000 | 5600 | 7900 |

## (2) Double-direction Thrust Angular Contact Ball Bearings - TAD20 Series

### ● Feature design

This is a double-row bearing with a one-piece outer ring. The ball assembly is arranged as a back-to-back, Angular Contact Ball Bearings with a high contact angle. This type is used as the Axial carrying Bearing in conjunction with a Double-row Cylindrical Roller Bearings.

### ● Bearing No.

**40 TAD 20 C7 P4**

- P4: Tolerance class
  - P4: class 4 (standard)
  - P5: class 5
- C7: Clearance code C7, C8
- 20: Dimension series number
- TAD: Bearing type
- 40: Bore diameter (mm)

### ● Tolerance

The outer ring is made with a negative tolerance for a clearance fit in the housing. This enables the associated radial bearing to carry a radial load.

### ● Standard preload

| Bore Diameter Number | Standard preload (N) C7 | Standard preload (N) C8 |
|---|---|---|
| 20TAD20 | 215 | 590 |
| 30TAD20 | 245 | |
| 35TAD20 | | 685 |
| 40TAD20 | 295 | |
| 45TAD20 | | 785 |
| 50TAD20 | 345 | 880 |
| 55TAD20 | 390 | 980 |
| 60TAD20 | | |
| 65TAD20 | 590 | 1250 |
| 70TAD20 | | 1350 |
| 75TAD20 | 685 | 1750 |
| 80TAD20 | | |
| 85TAD20 | | 2150 |
| 90TAD20 | 1050 | 2850 |
| 95TAD20 | 1150 | 2950 |
| 100TAD20 | | 3450 |
| 105TAD20 | 1450 | |
| 110TAD20 | | 4400 |
| 120TAD20 | 1650 | 4700 |
| 130TAD20 | 1750 | |
| 140TAD20 | 1950 | 6350 |
| 150TAD20 | 2750 | |
| 160TAD20 | | 6850 |
| 170TAD20 | 2950 | 8800 |
| 180TAD20 | 3900 | |
| 190TAD20 | | 11800 |
| 200TAD20 | 4100 | |

### Inner Ring and Height Tolerances

Unit: μm

| Nominal bearing bore diameter d (mm) | | Single plane mean bore diameter deviation $\Delta d_{mb}$ | | | | Variation of assembled height T | | Width variation of inner ring $V_{Bs}$ (Max) | | Side face runout with reference to bore $S_d$ (Max) | | Side face runout with reference to raceway of assembled bearing inner ring and of assembled bearing outer ring $S_{ia}$, $S_{ea}$ (Max) | |
|---|---|---|---|---|---|---|---|---|---|---|---|---|---|
| | | Class 5 | | Class 4 | | | | | | | | | |
| Over | Incl. | High | Low | High | Low | High | Low | Class 5 | Class 4 | Class 5 | Class 4 | Class 5 | Class 4 |
| 18 | 30 | 0 | − 6 | 0 | − 5 | 0 | −300 | 5 | 2.5 | 8 | 4 | 5 | 3 |
| 30 | 50 | 0 | − 8 | 0 | − 6 | 0 | −400 | 5 | 3 | 8 | 4 | 5 | 3 |
| 50 | 80 | 0 | − 9 | 0 | − 7 | 0 | −500 | 6 | 4 | 8 | 5 | 6 | 5 |
| 80 | 120 | 0 | −10 | 0 | − 8 | 0 | −600 | 7 | 4 | 9 | 5 | 6 | 5 |
| 120 | 180 | 0 | −13 | 0 | −10 | 0 | −700 | 8 | 5 | 10 | 6 | 8 | 6 |
| 180 | 250 | 0 | −15 | 0 | −12 | 0 | −800 | 10 | 6 | 11 | 7 | 8 | 6 |

### Variation and deviation of outer ring

Unit: μm

| Nominal bearing bore diameter D (mm) | | Single plane mean outside diameter deviation $\Delta D_{mb}$ | | Width variation of inner ring $V_{Cs}$ (Max) | | Outside inclination of outer ring $S_d$ (Max) | |
|---|---|---|---|---|---|---|---|
| | | Class 5・Class 4 | | | | | |
| Over | Incl. | High | Low | Class 5 | Class 4 | Class 5 | Class 4 |
| 18 | 30 | −20 | −27 | 5 | 2.5 | 8 | 4 |
| 30 | 50 | −24 | −33 | 6 | 3 | 8 | 4 |
| 50 | 80 | −28 | −38 | 8 | 4 | 9 | 5 |
| 80 | 120 | −33 | −44 | 8 | 5 | 10 | 5 |
| 120 | 180 | −33 | −46 | 8 | 5 | 10 | 5 |
| 180 | 250 | −37 | −52 | 10 | 7 | 11 | 7 |
| 250 | 315 | −41 | −59 | 11 | 7 | 13 | 8 |





## (3) Combination Angular Contact Ball Bearings Type TAH10, TBH10

### ● Feature design

The ball diameter and quantity are the same as Double-direction Thrust Angular Contact Ball Bearings type TAD20. The contact angle is 30° for TAH10 type and 40° for TBH10 type. They are suitable for high-speed.

Their Duplex Combination width 2B of type DB or DF is the same as width B1 of TAD20 type. TAD20 type are interchangeable to TAH10 type or TBH10 type by changing the method of setting to shaft.

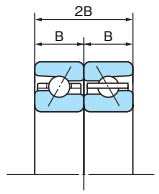


Type TAH (TBH)

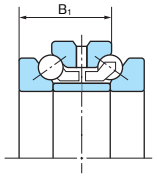


Type TAD

### ● Standard preload

Unit: N

| Bore Diameter Number | Bearing TAH | Bearing TBH |
|---|---|---|
| 50 | 294 | 539 |
| 55 | 392 | 686 |
| 60 | | |
| 65 | | |
| 70 | 588 | 1080 |
| 75 | | |
| 80 | 686 | 1270 |
| 85 | | |
| 90 | 1080 | 1860 |
| 95 | | |
| 100 | | |
| 105 | 1180 | 2060 |
| 110 | 1370 | 2450 |
| 120 | 1470 | 2550 |
| 130 | 1860 | 3330 |
| 140 | 1960 | 3530 |
| 150 | 2450 | 4310 |
| 160 | 2650 | 4510 |
| 170 | 3040 | 5300 |

### ● Tolerance of outside diameter

The outside diameter of the outer ring is made with a special tolerance for a clearance fit in the housing.

This enables the associated radial bearing to carry a radial load, like as TAD20 type.

### Tolerance of outside diameter

Unit: μm

| Nominal bearing outside diameter D (mm) | | Outside diameter deviation $\Delta D_s$ | |
|---|---|---|---|
| Over | Incl. | High | Low |
| 30 | 50 | −20 | −41 |
| 50 | 80 | −30 | −49 |
| 80 | 120 | −36 | −58 |
| 120 | 180 | −43 | −68 |
| 180 | 250 | −50 | −79 |
| 250 | 315 | −56 | −88 |

JIS (ISO) class 4 for other tolerances

### ● Bearing No.

**90 TBH 10 T DB /GM P4**

- P4: Tolerance
  - P4: class 4 (standard)
  - P5: class 5
- GM: Preload
  - GM: Standard preload
- DB: Combination
  - DB : back-to-back (standard)
  - DF : face-to-face
  - FFB: combination of 3
- T: Material of cage
  - T: phenolic resin
- 10: Dimension series number
  - Dimension series 10
- TBH: Bearing type
  - TAH: contact angle 30°
  - TBH: contact angle 40°
- 90: Bore diameter (mm)

NACHI

# Double-direction Thrust Angular Contact Ball Bearings

## TAD20 Series

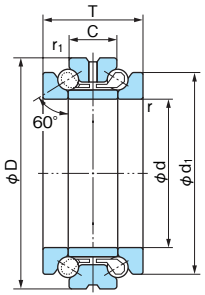


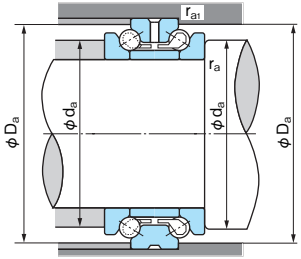


1N=0.102kgf

| Boundary dimensions (mm) | | | | | | | | Bearing No. | | Basic dynamic load rating Ca (N) | | Basic static load rating Coa (N) | Limiting speed (min-1) | | Abutment and fillet dimensions (mm) | | | | Mass (kg) | Bearing No. Standard type |
|---|---|---|---|---|---|---|---|---|---|---|---|---|---|---|---|---|---|---|---|---|
| d Standard type | d Large bore type(1) | D | $d_1$ | T | C | r (min) | $r_1$ (min) | Standard type | Large bore type (1) | | | | Grease lubrication | Oil lubrication | $d_a$ (min) | $D_a$ (max) | $r_a$ (max) | $r_{a1}$ (max) | | |
| **25** | **27** | 47 | 40 | 28 | 14 | 0.6 | 0.3 | **25TAD20** | **27TAD20** | 10700 | | 19900 | 8000 | 10000 | 33 | 43.5 | 0.6 | 0.3 | 0.197 | **25TAD20** |
| **30** | **32** | 55 | 47 | 32 | 16 | 1 | 0.6 | **30** | **32** | 14000 | | 27100 | 7000 | 9000 | 39 | 51 | 1 | 0.6 | 0.301 | **30** |
| **35** | **37** | 62 | 53 | 34 | 17 | 1 | 0.6 | **35** | **37** | 16200 | | 33000 | 6200 | 8200 | 45 | 58 | 1 | 0.6 | 0.394 | **35** |
| **40** | **42** | 68 | 58.5 | 36 | 18 | 1 | 0.6 | **40TAD20** | **42TAD20** | 18600 | | 39500 | 5800 | 7800 | 50 | 64 | 1 | 0.6 | 0.482 | **40TAD20** |
| **45** | **47** | 75 | 65 | 38 | 19 | 1 | 0.6 | **45** | **47** | 21200 | | 47000 | 5500 | 7300 | 56 | 71 | 1 | 0.6 | 0.605 | **45** |
| **50** | **52** | 80 | 70 | 38 | 19 | 1 | 0.6 | **50** | **52** | 22000 | | 52000 | 5000 | 6700 | 61 | 76 | 1 | 0.6 | 0.656 | **50** |
| **55** | **57** | 90 | 78 | 44 | 22 | 1.1 | 0.6 | **55TAD20** | **57TAD20** | 29900 | | 71500 | 4500 | 6200 | 68 | 85 | 1 | 0.6 | 0.988 | **55TAD20** |
| **60** | **62** | 95 | 83 | 44 | 22 | 1.1 | 0.6 | **60** | **62** | 30500 | | 75000 | 4300 | 6000 | 73 | 90 | 1 | 0.6 | 1.06 | **60** |
| **65** | **67** | 100 | 88 | 44 | 22 | 1.1 | 0.6 | **65** | **67** | 31500 | | 81500 | 4100 | 5500 | 78 | 95 | 1 | 0.6 | 1.12 | **65** |
| **70** | **73** | 110 | 97 | 48 | 24 | 1.1 | 0.6 | **70TAD20** | **73TAD20** | 37500 | | 99000 | 3800 | 5200 | 85 | 105 | 1 | 0.6 | 1.53 | **70TAD20** |
| **75** | **78** | 115 | 102 | 48 | 24 | 1.1 | 0.6 | **75** | **78** | 38500 | | 107000 | 3600 | 4900 | 90 | 110 | 1 | 0.6 | 1.16 | **75** |
| **80** | **83** | 125 | 110 | 54 | 27 | 1.1 | 0.6 | **80** | **83** | 51000 | | 138000 | 3400 | 4500 | 97 | 119 | 1 | 0.6 | 2.20 | **80** |
| **85** | **88** | 130 | 115 | 54 | 27 | 1.1 | 0.6 | **85TAD20** | **88TAD20** | 51500 | | 144000 | 3200 | 4300 | 102 | 124 | 1 | 0.6 | 2.31 | **85TAD20** |
| **90** | **93** | 140 | 123 | 60 | 30 | 1.5 | 1 | **90** | **93** | 59000 | | 166000 | 3000 | 4000 | 109 | 132 | 1.5 | 1 | 3.05 | **90** |
| **95** | **98** | 145 | 128 | 60 | 30 | 1.5 | 1 | **95** | **98** | 59500 | | 173000 | 2900 | 3900 | 114 | 137 | 1.5 | 1 | 3.18 | **95** |
| **100** | **103** | 150 | 133 | 60 | 30 | 1.5 | 1 | **100TAD20** | **103TAD20** | 60500 | | 180000 | 2800 | 3700 | 119 | 142 | 1.5 | 1 | 3.32 | **100TAD20** |
| **105** | **109** | 160 | 142 | 66 | 33 | 2 | 1 | **105** | **109** | 67000 | | 199000 | 2600 | 3500 | 125 | 151 | 2 | 1 | 4.19 | **105** |
| **110** | **114** | 170 | 150 | 72 | 36 | 2 | 1 | **110** | **114** | 81500 | | 236000 | 2500 | 3300 | 132 | 161 | 2 | 1 | 5.35 | **110** |
| **120** | **124** | 180 | 160 | 72 | 36 | 2 | 1 | **120TAD20** | **125TAD20** | 84000 | | 256000 | 2300 | 3100 | 142 | 171 | 2 | 1 | 5.73 | **120TAD20** |
| **130** | **135** | 200 | 177 | 84 | 42 | 2 | 1 | **130** | **135** | 109000 | | 325000 | 2100 | 2800 | 156 | 190 | 2 | 1 | 8.58 | **130** |
| **140** | **145** | 210 | 187 | 84 | 42 | 2 | 1 | **140** | **145** | 113000 | | 355000 | 2000 | 2600 | 166 | 200 | 2 | 1 | 9.10 | **140** |
| **150** | **155** | 225 | 200 | 90 | 45 | 2.1 | 1.1 | **150TAD20** | **155TAD20** | 123000 | | 390000 | 1850 | 2500 | 178 | 213 | 2 | 1 | 11.2 | **150TAD20** |
| **160** | **165** | 240 | 212 | 96 | 48 | 2.1 | 1.1 | **160** | **165** | 138000 | | 435000 | 1750 | 2350 | 190 | 227 | 2 | 1 | 13.6 | **160** |
| **170** | **176** | 260 | 230 | 108 | 54 | 2.1 | 1.1 | **170** | **176** | 175000 | | 550000 | 1600 | 2150 | 204 | 246 | 2 | 1 | 18.5 | **170** |
| **180** | **187** | 280 | 248 | 120 | 60 | 2.1 | 1.1 | **180TAD20** | **187TAD20** | 200000 | | 640000 | 1500 | 2000 | 220 | 264 | 2 | 1 | 24.7 | **180TAD20** |
| **190** | **197** | 290 | 258 | 120 | 60 | 2.1 | 1.1 | **190** | **197** | 203000 | | 665000 | 1450 | 1950 | 230 | 274 | 2 | 1 | 25.5 | **190** |
| **200** | **207** | 310 | 274 | 132 | 66 | 2.1 | 1.1 | **200** | **207** | 257000 | | 835000 | 1350 | 1800 | 244 | 292 | 2 | 1 | 32.7 | **200** |

Note: (1) Large bore type bearings are used at large bore side of cylindrical roller bearings with tapered bore NN3000K type.

# Combination Angular Contact Ball Bearings

## TAH10 Series

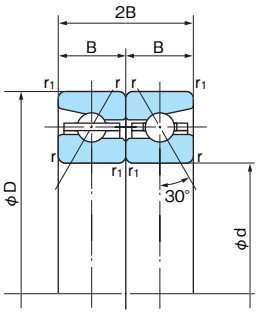


Type TAH

1N=0.102kgf

| Bearing No. | Dimensions (mm) | | | | | Basic dynamic load rating Ca (N) | Basic static load rating Coa (N) | Limiting speed (min-1) | |
|---|---|---|---|---|---|---|---|---|---|
| | d | D | 2B | r (min) | r1 (min) | | | Grease lubrication | Oil lubrication |
| 50TAH10DB | 50 | 80 | 28.5 | 1 | 0.6 | 19200 | 40500 | 9200 | 11000 |
| 55TAH10DB | 55 | 90 | 33 | 1.1 | 0.6 | 23800 | 51000 | 8300 | 9700 |
| 60TAH10DB | 60 | 95 | 33 | 1.1 | 0.6 | 24700 | 56000 | 7700 | 9000 |
| 65TAH10DB | 65 | 100 | 33 | 1.1 | 0.6 | 25600 | 61000 | 7300 | 8500 |
| 70TAH10DB | 70 | 110 | 36 | 1.1 | 0.6 | 35000 | 80000 | 6700 | 7800 |
| 75TAH10DB | 75 | 115 | 36 | 1.1 | 0.6 | 35500 | 83500 | 6300 | 7400 |
| 80TAH10DB | 80 | 125 | 40.5 | 1.1 | 0.6 | 41500 | 99500 | 5900 | 6800 |
| 85TAH10DB | 85 | 130 | 40.5 | 1.1 | 0.6 | 42000 | 104000 | 5600 | 6500 |
| 90TAH10DB | 90 | 140 | 45 | 1.5 | 1 | 55500 | 135000 | 5200 | 6100 |
| 95TAH10DB | 95 | 145 | 45 | 1.5 | 1 | 56000 | 141000 | 5000 | 5800 |
| 100TAH10DB | 100 | 150 | 45 | 1.5 | 1 | 57000 | 147000 | 4800 | 5600 |
| 105TAH10DB | 105 | 160 | 49.5 | 2 | 1 | 64500 | 168000 | 4500 | 5300 |
| 110TAH10DB | 110 | 170 | 54 | 2 | 1 | 73000 | 191000 | 4300 | 5000 |
| 120TAH10DB | 120 | 180 | 54 | 2 | 1 | 75000 | 207000 | 4000 | 4700 |
| 130TAH10DB | 130 | 200 | 63 | 2 | 1 | 99500 | 269000 | 3600 | 4200 |
| 140TAH10DB | 140 | 210 | 63 | 2 | 1 | 103000 | 291000 | 3400 | 4000 |
| 150TAH10DB | 150 | 225 | 67.5 | 2.1 | 1.1 | 121000 | 340000 | 3200 | 3700 |
| 160TAH10DB | 160 | 240 | 72 | 2.1 | 1.1 | 131000 | 375000 | 3000 | 3500 |
| 170TAH10DB | 170 | 260 | 81 | 2.1 | 1.1 | 154000 | 445000 | 2800 | 3300 |





# Combination Angular Contact Ball Bearings

## TBH10 Series

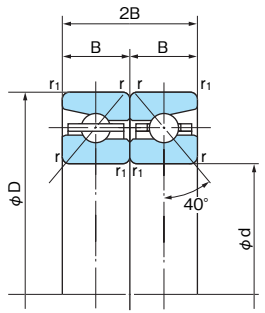


Type TBH

1N=0.102kgf

| Bearing No. | Dimensions (mm) | | | | | Basic dynamic load rating Ca (N) | Basic static load rating Coa (N) | Limiting speed (min-1) | |
|---|---|---|---|---|---|---|---|---|---|
| | d | D | 2B | r (min) | r1 (min) | | | Grease lubrication | Oil lubrication |
| 50TBH10DB | 50 | 80 | 28.5 | 1 | 0.6 | 22800 | 53000 | 7700 | 9200 |
| 55TBH10DB | 55 | 90 | 33 | 1.1 | 0.6 | 28200 | 67000 | 6900 | 8300 |
| 60TBH10DB | 60 | 95 | 33 | 1.1 | 0.6 | 29300 | 73000 | 6500 | 7700 |
| 65TBH10DB | 65 | 100 | 33 | 1.1 | 0.6 | 30000 | 79500 | 6100 | 7300 |
| 70TBH10DB | 70 | 110 | 36 | 1.1 | 0.6 | 41500 | 104000 | 5600 | 6700 |
| 75TBH10DB | 75 | 115 | 36 | 1.1 | 0.6 | 42000 | 109000 | 5300 | 6300 |
| 80TBH10DB | 80 | 125 | 40.5 | 1.1 | 0.6 | 49000 | 130000 | 4900 | 5900 |
| 85TBH10DB | 85 | 130 | 40.5 | 1.1 | 0.6 | 50000 | 136000 | 4700 | 5600 |
| 90TBH10DB | 90 | 140 | 45 | 1.5 | 1 | 65500 | 176000 | 4300 | 5200 |
| 95TBH10DB | 95 | 145 | 45 | 1.5 | 1 | 66500 | 184000 | 4200 | 5000 |
| 100TBH10DB | 100 | 150 | 45 | 1.5 | 1 | 67500 | 191000 | 4000 | 4800 |
| 105TBH10DB | 105 | 160 | 49.5 | 2 | 1 | 76500 | 219000 | 3800 | 4500 |
| 110TBH10DB | 110 | 170 | 54 | 2 | 1 | 86000 | 249000 | 3600 | 4300 |
| 120TBH10DB | 120 | 180 | 54 | 2 | 1 | 88500 | 269000 | 3300 | 4000 |
| 130TBH10DB | 130 | 200 | 63 | 2 | 1 | 118000 | 350000 | 3000 | 3600 |
| 140TBH10DB | 140 | 210 | 63 | 2 | 1 | 121000 | 380000 | 2900 | 3400 |
| 150TBH10DB | 150 | 225 | 67.5 | 2.1 | 1.1 | 143000 | 445000 | 2700 | 3200 |
| 160TBH10DB | 160 | 240 | 72 | 2.1 | 1.1 | 155000 | 490000 | 2500 | 3000 |
| 170TBH10DB | 170 | 260 | 81 | 2.1 | 1.1 | 182000 | 580000 | 2300 | 2800 |

## Ball Screw Support Bearings

This type is used for supporting the ball screws that are used as actuators of high precision and high speed machines, precision measurement equipment, robots, etc.
This is a precision and high ability bearing.

### ● Feature design

(1) High stiffness
These bearings are designed with polyamide cages and a greater number of balls than conventional angular contact ball bearings. For these reasons, bearing stiffness is greater than conventional bearings.

(2) Easy fitting and adjustment
These bearings are supplied with a pre-set preload so difficult adjustment and torque measurement is eliminated.

(3) Simplified bearing mounting structure
These bearings are supplied with a 60° contact angle so radial and thrust load combinations can be sustained. This results in a simplified and compact shaft and housing design.

(4) Available with seal
Seals come in both contact seal and non-contact seal types. It is possible to choose the type that best suits the application.

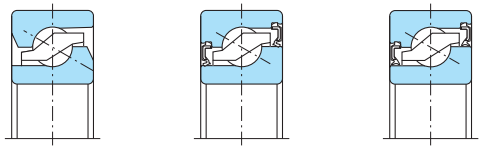

Open type　　Contact seal　　Non-contact seal

Duplex sets　　Triplex sets　　Quad sets

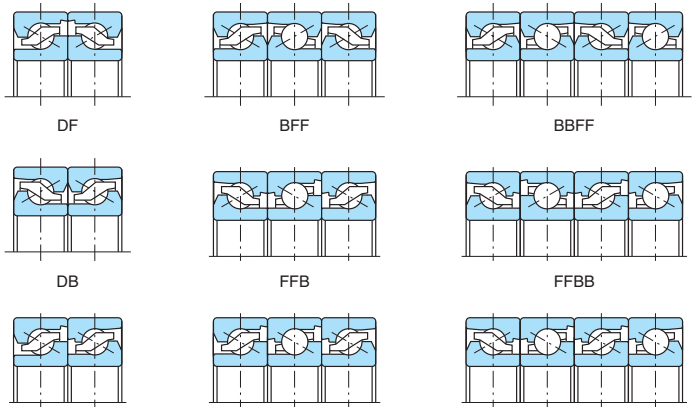


(Sealed bearings are sealed on the outside edges only when used in combination.)





### ● Bearing No.

**30 TAB 06 DF - 2LR / GM P4**

- 30 — Bearing bore diameter
- TAB — Bearing type
- 06 — Bearing outer diameter
- DF — Bearing combination indicator
- 2LR — Seal number (no number for open type)
- GM — Preload (GM is standard)
- P4 — Tolerance (P4 is standard)

Flush ground (universal matching)

**30 TAB 06 U - 2LR / GM P4**

- U — Flush ground (free set matching)
- 2LR — Seal number (no number for open type)

### ● Tolerances

Tolerances for inner ring (outer ring width/axial runout)

Unit: μm

| Nominal bearing bore diameter (mm) | | Single planemean bore diameter variation $\Delta d_{mp}$, $\Delta d_s$ | | | | Bore diameter variation in a single radial plane $V_{dp}$ (Max) | | Mean bore diameter variation $V_{dmp}$ (Max) | | Deviation of a single(1) inner ring width (or a single outer ring width) $\Delta B_s$($\Delta C_s$) | | | | Width deviation $V_{Bs}$ of inner ring (Max) | | Radial runout of assembled bearing inner ring $K_{ia}$ (Max) | | Side face runout $S_d$ with reference to bore (Max) | | Side face runout with reference to raceway of assembled bearing inner ring $S_{ia}$ and of assembled bearing outer ring $S_{ea}$ (Max) | |
|---|---|---|---|---|---|---|---|---|---|---|---|---|---|---|---|---|---|---|---|---|---|
| | | P5 | | P4 | | | | | | P5 | | P4 | | | | | | | | | |
| Over | Incl. | High | Low | High | Low | P5 | P4 | P5 | P4 | High | Low | High | Low | P5 | P4 | P5 | P4 | P5 | P4 | P5 | P4 |
| 10 | 18 | 0 | –5 | 0 | –4 | 4 | 3 | 4 | 3 | 0 | – 80 | 0 | – 80 | 5 | 2.5 | 4 | 2.5 | 7 | 3 | 4 | 2 |
| 18 | 30 | 0 | –6 | 0 | –5 | 5 | 4 | 5 | 4 | 0 | –120 | 0 | –120 | 5 | 2.5 | 4 | 3 | 8 | 4 | 5 | 2.5 |
| 30 | 50 | 0 | –8 | 0 | –6 | 6 | 5 | 6 | 5 | 0 | –120 | 0 | –120 | 5 | 3 | 5 | 4 | 8 | 4 | 6 | 2.5 |
| 50 | 60 | 0 | –9 | 0 | –7 | 7 | 6 | 7 | 6 | 0 | –150 | 0 | –150 | 6 | 4 | 5 | 4 | 8 | 5 | 7 | 2.5 |

Note: (1) These deviations are for single bearing. For combination bearings, multiply these values by row number.

Tolerances for outer ring

Unit: μm

| Nominal bearing outside diameter (mm) | | Single plane mean outside diameter variation of outer ring $\Delta D_{mp}$, $\Delta D_s$ | | | | Outside diameter variation in a single radial plane $V_{Dp}$ (Max) | | Mean outside diameter variation $V_{Dmp}$ (Max) | | Width deviation $V_{Cs}$ of outer ring (Max) | | Radial runout of assembled bearing outer ring $K_{ea}$ (Max) | | Outside inclination of outer ring $S_D$ (Max) | |
|---|---|---|---|---|---|---|---|---|---|---|---|---|---|---|---|
| | | P5 | | P4 | | | | | | | | | | | |
| Over | Incl. | High | Low | High | Low | P5 | P4 | P5 | P4 | P5 | P4 | P5 | P4 | P5 | P4 |
| 30 | 50 | 0 | – 7 | 0 | –6 | 5 | 5 | 4 | 3 | 5 | 2.5 | 7 | 5 | 8 | 4 |
| 50 | 80 | 0 | – 9 | 0 | –7 | 7 | 5 | 5 | 3.5 | 6 | 3 | 8 | 5 | 8 | 4 |
| 80 | 120 | 0 | –10 | 0 | –8 | 8 | 6 | 5 | 4 | 8 | 4 | 10 | 6 | 9 | 5 |

## ● Preload and Axial Spring Constant

| Bearing No. | Standard Preload M (N) Combination Mounted Bearing | | | | Axial Spring Constant (N/μm) Combination Mounted Bearing | | | |
|---|---|---|---|---|---|---|---|---|
| | DF DB | BFF FFB | BBFF FFBB | BFFF FFFB | DF DB | BFF FFB | BBFF FFBB | BFFF FFFB |
| 15TAB04 | 2160 | 2940 | 4310 | 3430 | 735 | 1080 | 1470 | 1320 |
| 17TAB04 | 2160 | 2940 | 4310 | 3430 | 735 | 1080 | 1470 | 1320 |
| 20TAB04 | 2160 | 2940 | 4310 | 3430 | 735 | 1080 | 1470 | 1320 |
| 25TAB06 | 3330 | 4510 | 6670 | 5200 | 981 | 1470 | 1960 | 1910 |
| 30TAB06 | 3330 | 4510 | 6670 | 5200 | 981 | 1470 | 1960 | 1910 |
| 35TAB07 | 3920 | 5300 | 7840 | 6180 | 1230 | 1770 | 2350 | 2300 |
| 40TAB07 | 3920 | 5300 | 7840 | 6180 | 1230 | 1770 | 2350 | 2300 |
| 40TAB09 | 5200 | 7060 | 10400 | 8140 | 1320 | 1910 | 2550 | 2500 |
| 45TAB07 | 4120 | 5590 | 8240 | 6470 | 1270 | 1910 | 2550 | 2500 |
| 45TAB10 | 5980 | 8140 | 12000 | 9410 | 1470 | 2160 | 2890 | 2790 |
| 50TAB10 | 6280 | 8530 | 12600 | 9810 | 1520 | 2260 | 3040 | 2940 |
| 55TAB10 | 6280 | 8530 | 12600 | 9810 | 1520 | 2260 | 3040 | 2940 |
| 55TAB12 | 7060 | 9610 | 14100 | 11100 | 1770 | 2550 | 3480 | 3380 |
| 60TAB12 | 7060 | 9610 | 14100 | 11100 | 1770 | 2550 | 3480 | 3380 |

## ● Shaft and housing tolerance:

(1) For the fit, refer to the following table.

| | |
|---|---|
| Shaft fit | h5 |
| Housing fit | H6 |

(2) For the squareness of a shoulder, refer to the following table.

| Dimensions of shaft diameter and housing bore diameter (mm) | | Squareness (μm) |
|---|---|---|
| Over | Incl. | |
| — | 80 | 4 |
| 80 | 120 | 5 |





## ● Axial Load and Axial Displacement

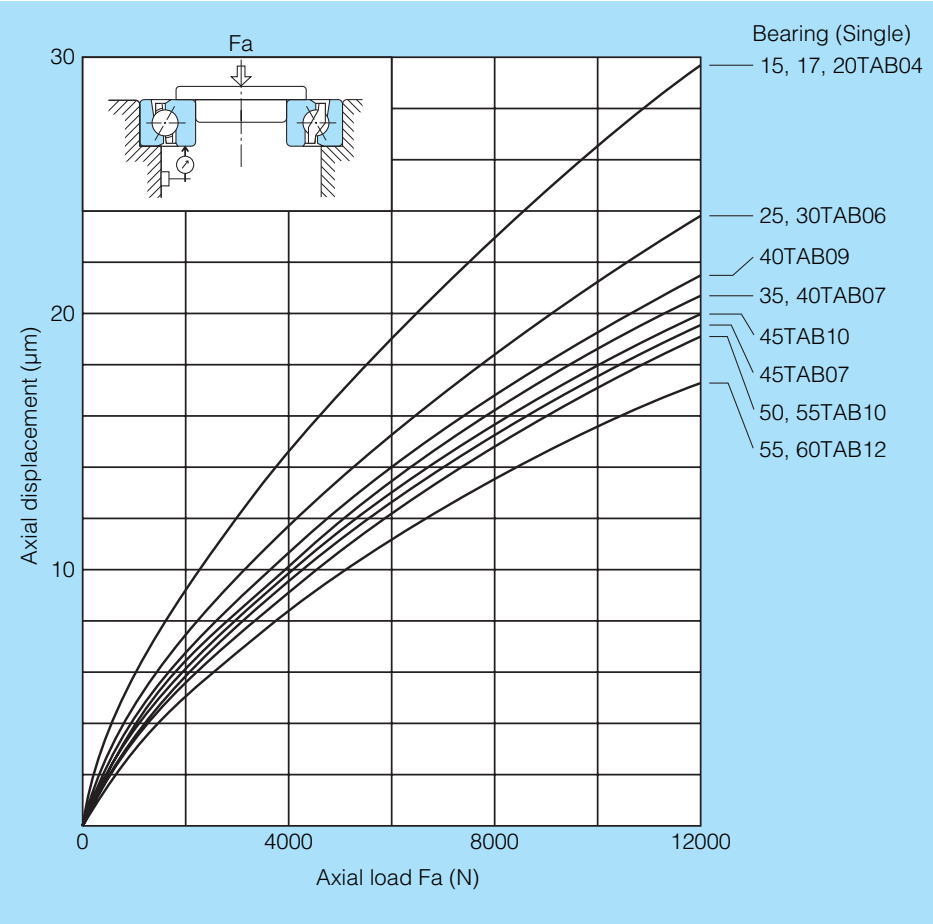

# Ball Screw Support Bearings
## TAB Series

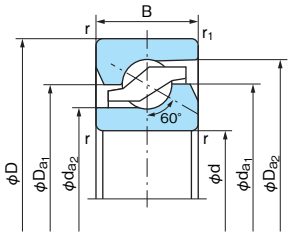

Open

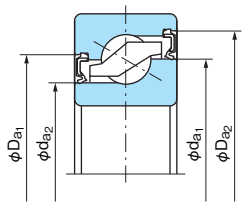

Contact seal (2LR)

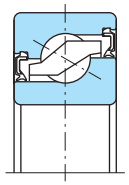
Non-contact seal (2NK)

■Dynamic equivalent axial load

Pa=XFr+YFa

| No. of Bearing in set | | 2 | | 3 | | | 4 | | | |
|---|---|---|---|---|---|---|---|---|---|---|
| Brgs loaded axial load | | 1 | 2 | 1 | 2 | 3 | 1 | 2 | 3 | 4 |
| Fa/Fr≦e | X | 1.9 | — | 1.43 | 2.33 | — | 1.17 | 2.33 | 2.53 | — |
| | Y | 0.54 | — | 0.77 | 0.35 | — | 0.89 | 0.35 | 0.26 | — |
| Fa/Fr>e | X | 0.92 | 0.92 | 0.92 | 0.92 | 0.92 | 0.92 | 0.92 | 0.92 | 0.92 |
| | Y | 1 | 1 | 1 | 1 | 1 | 1 | 1 | 1 | 1 |

e=2.17

1N=0.102kgf

| Boundary dimensions (mm) | | | | | Bearing No. | Basic dynamic load rating (2) Ca (N) | Axial limiting load (3) Coa (N) | | Limiting speed (min-1) | | Starting torque (N·cm) | Reference Dimensions (mm) | | | | Mass (kg) (Reference) | Bearing No. |
|---|---|---|---|---|---|---|---|---|---|---|---|---|---|---|---|---|---|
| d | D | B | r (min) | r1 (min) | | | | | Grease lubrication | Oil lubrication | Grease lubrication | da1 | da2 | Da1 | Da2 | | |
| 15 | 47 | 15 | 1(1) | 0.6 | **15TAB04DF(DB)** | 25900 | 32000 | | 6300 | 8000 | 15 | 33.7 | 26.8 | 33.5 | 41 | 0.14 | **15TAB04DF(DB)** |
| | 47 | 15 | 1(1) | 0.6 | **15TAB04DF(DB)-2NK** | 25900 | 32000 | | 6300 | — | — | 33.7 | 26.8 | 35 | 41.9 | 0.14 | **15TAB04DF(DB)-2NK** |
| | 47 | 15 | 1(1) | 0.6 | **15TAB04DF(DB)-2LR** | 25900 | 32000 | | 6300 | — | — | 33.7 | 26.8 | 35 | 41.9 | 0.14 | **15TAB04DF(DB)-2LR** |
| 17 | 47 | 15 | 1 | 0.6 | **17TAB04DF(DB)** | 25900 | 32000 | | 6300 | 8000 | 15 | 33.7 | 26.8 | 33.5 | 41 | 0.13 | **17TAB04DF(DB)** |
| | 47 | 15 | 1 | 0.6 | **17TAB04DF(DB)-2NK** | 25900 | 32000 | | 6300 | — | — | 33.7 | 26.8 | 35 | 41.9 | 0.13 | **17TAB04DF(DB)-2NK** |
| | 47 | 15 | 1 | 0.6 | **17TAB04DF(DB)-2LR** | 25900 | 32000 | | 6300 | — | — | 33.7 | 26.8 | 35 | 41.9 | 0.13 | **17TAB04DF(DB)-2LR** |
| 20 | 47 | 15 | 1 | 0.6 | **20TAB04DF(DB)** | 25900 | 32000 | | 6300 | 8000 | 15 | 33.7 | 26.8 | 33.5 | 41 | 0.12 | **20TAB04DF(DB)** |
| | 47 | 15 | 1 | 0.6 | **20TAB04DF(DB)-2NK** | 25900 | 32000 | | 6300 | — | — | 33.7 | 26.8 | 35 | 41.9 | 0.12 | **20TAB04DF(DB)-2NK** |
| | 47 | 15 | 1 | 0.6 | **20TAB04DF(DB)-2LR** | 25900 | 32000 | | 6300 | — | — | 33.7 | 26.8 | 35 | 41.9 | 0.12 | **20TAB04DF(DB)-2LR** |
| 25 | 62 | 15 | 1 | 0.6 | **25TAB06DF(DB)** | 29900 | 46400 | | 4650 | 6000 | 20 | 46.2 | 39.7 | 46 | 53.4 | 0.24 | **25TAB06DF(DB)** |
| | 62 | 15 | 1 | 0.6 | **25TAB06DF(DB)-2NK** | 29900 | 46400 | | 4650 | — | — | 46.2 | 39.7 | 47.5 | 54.9 | 0.24 | **25TAB06DF(DB)-2NK** |
| | 62 | 15 | 1 | 0.6 | **25TAB06DF(DB)-2LR** | 29900 | 46400 | | 4650 | — | — | 46.2 | 39.7 | 47.5 | 54.9 | 0.24 | **25TAB06DF(DB)-2LR** |
| 30 | 62 | 15 | 1 | 0.6 | **30TAB06DF(DB)** | 29900 | 46400 | | 4650 | 6000 | 20 | 46.2 | 39.7 | 46 | 53.4 | 0.21 | **30TAB06DF(DB)** |
| | 62 | 15 | 1 | 0.6 | **30TAB06DF(DB)-2NK** | 29900 | 46400 | | 4650 | — | — | 46.2 | 39.7 | 47.5 | 54.9 | 0.21 | **30TAB06DF(DB)-2NK** |
| | 62 | 15 | 1 | 0.6 | **30TAB06DF(DB)-2LR** | 29900 | 46400 | | 4650 | — | — | 46.2 | 39.7 | 47.5 | 54.9 | 0.21 | **30TAB06DF(DB)-2LR** |
| 35 | 72 | 15 | 1 | 0.6 | **35TAB07DF(DB)** | 32500 | 54300 | | 3750 | 5000 | 25 | 56.2 | 49.7 | 56 | 63.4 | 0.29 | **35TAB07DF(DB)** |
| | 72 | 15 | 1 | 0.6 | **35TAB07DF(DB)-2NK** | 32500 | 54300 | | 3750 | — | — | 56.2 | 49.7 | 57.5 | 64.9 | 0.29 | **35TAB07DF(DB)-2NK** |
| | 72 | 15 | 1 | 0.6 | **35TAB07DF(DB)-2LR** | 32500 | 54300 | | 3750 | — | — | 56.2 | 49.7 | 57.5 | 64.9 | 0.29 | **35TAB07DF(DB)-2LR** |
| 40 | 72 | 15 | 1 | 0.6 | **40TAB07DF(DB)** | 32500 | 54300 | | 3750 | 5000 | 25 | 56.2 | 49.7 | 56 | 63.4 | 0.26 | **40TAB07DF(DB)** |
| | 72 | 15 | 1 | 0.6 | **40TAB07DF(DB)-2NK** | 32500 | 54300 | | 3750 | — | — | 56.2 | 49.7 | 57.5 | 64.9 | 0.26 | **40TAB07DF(DB)-2NK** |
| | 72 | 15 | 1 | 0.6 | **40TAB07DF(DB)-2LR** | 32500 | 54300 | | 3750 | — | — | 56.2 | 49.7 | 57.5 | 64.9 | 0.26 | **40TAB07DF(DB)-2LR** |
| | 90 | 20 | 1 | 0.6 | **40TAB09DF(DB)** | 65000 | 101000 | | 3150 | 4000 | 30 | 67.2 | 57.2 | 67 | 78.4 | 0.62 | **40TAB09DF(DB)** |
| | 90 | 20 | 1 | 0.6 | **40TAB09DF(DB)-2NK** | 65000 | 101000 | | 3150 | — | — | 67.2 | 57.2 | 68.5 | 79.9 | 0.62 | **40TAB09DF(DB)-2NK** |
| | 90 | 20 | 1 | 0.6 | **40TAB09DF(DB)-2LR** | 65000 | 101000 | | 3150 | — | — | 67.2 | 57.2 | 68.5 | 79.9 | 0.62 | **40TAB09DF(DB)-2LR** |
| 45 | 75 | 15 | 1 | 0.6 | **45TAB07DF(DB)** | 33500 | 59500 | | 3400 | 4500 | 50 | 61.7 | 55.2 | 61.5 | 68.9 | 0.25 | **45TAB07DF(DB)** |
| | 100 | 20 | 1 | 0.6 | **45TAB10DF(DB)** | 68000 | 113000 | | 2850 | 3500 | 60 | 74.2 | 64.2 | 74 | 85.4 | 0.79 | **45TAB10DF(DB)** |
| 50 | 100 | 20 | 1 | 0.6 | **50TAB10DF(DB)** | 69500 | 119000 | | 2700 | 3500 | 65 | 78.2 | 68.2 | 78 | 89.4 | 0.72 | **50TAB10DF(DB)** |
| 55 | 100 | 20 | 1 | 0.6 | **55TAB10DF(DB)** | 69500 | 119000 | | 2700 | 3500 | 65 | 78.2 | 68.2 | 78 | 89.4 | 0.95 | **55TAB10DF(DB)** |
| 55 | 120 | 20 | 1 | 0.6 | **55TAB12DF(DB)** | 73000 | 137000 | | 2300 | 3000 | 70 | 92.2 | 82.2 | 92 | 103.4 | 1.15 | **55TAB12DF(DB)** |
| 60 | 120 | 20 | 1 | 0.6 | **60TAB12DF(DB)** | 73000 | 137000 | | 2300 | 3000 | 70 | 92.2 | 82.2 | 92 | 103.4 | 1.08 | **60TAB12DF(DB)** |

Notes: (1) r (min) = 0.6 for inner ring
(2) When bearing sets carry axial load with two or three rows, the numbers should be multiplied by 1.64 or 2.16.
(3) When bearing sets carry axial load with two or three rows, the numbers should be multiplied by 2 or 3.

# Bearings for Turntable Applications

### Cross Tapered Roller Bearings

This bearing type is designed with two inner rings and one outer ring. The rolling elements (Tapered rollers) are arranged with their surfaces contact the ring raceways in an alternating pattern.

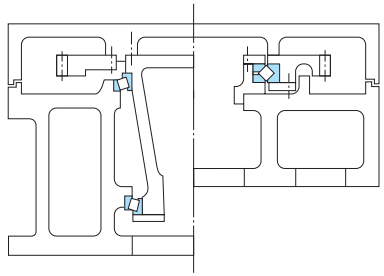

Example of mounting of Tapered Roller Bearings and Cross Tapered Roller Bearing

## ● Feature design

(1) This type can sustain radial, overturning moment and bi-directional axial loads.
(2) Change in size due to thermal growth does not affect this type of bearing. Preload is stable over the entire temperature operating range.
(3) Light weight, compact, easy to assemble.

## ● Applications

(1) Worktable of machining centers or vertical grinding machines
(2) Work-spindle of lathes or grinding machines
(3) The indexing mechanisms of large milling machines or drilling machines
(4) Turntable mechanism of parabolic antenna

## ● Tolerances

| Bearing No. | Single plane mean bore diameter deviation $\Delta d_{mp}$ | | Single plane mean outside diameter deviation $\Delta D_{mp}$ | | Variation of assembled height T | | Outer ring runout Max (μm) | |
|---|---|---|---|---|---|---|---|---|
| | High | Low | High | Low | High | Low | Radial runout | Sideface runout |
| 200XRN28 | 0 | –15 | 0 | –18 | +350 | –250 | 7 | 7 |
| 250XRN35 | 0 | –10 | 0 | –13 | +350 | –250 | 9 | 9 |
| 300XRN40 | 0 | –13 | 0 | –15 | +350 | –250 | 7 | 7 |
| 350XRN47 | 0 | –13 | 0 | –15 | +350 | –250 | 9 | 9 |
| 400XRN55 | 0 | –13 | 0 | –18 | +350 | –250 | 9 | 9 |
| 0457XRN060 | +25 | 0 | +25 | 0 | +380 | –380 | 9 | 9 |
| 580XRN76 | +25 | 0 | +38 | 0 | +406 | –406 | 10 | 10 |
| 600XRN83 | +38 | 0 | +38 | 0 | +406 | –406 | 12 | 12 |
| 0685XRN091 | +38 | 0 | +38 | 0 | +508 | –508 | 12 | 12 |
| 0901XRN112 | +51 | 0 | +51 | 0 | +508 | –508 | 14 | 14 |
| 1028XRN132 | +76 | 0 | +76 | 0 | +760 | –760 | 16 | 16 |





## ● Axial Load and Axial Displacement

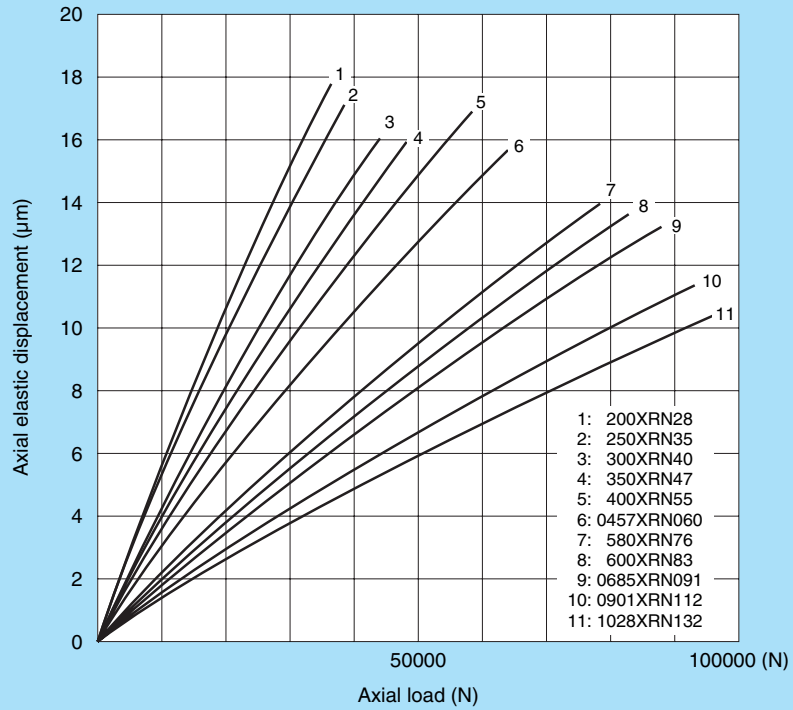

# Cross Tapered Roller Bearings

Bore Diameter: 200～1028.7mm

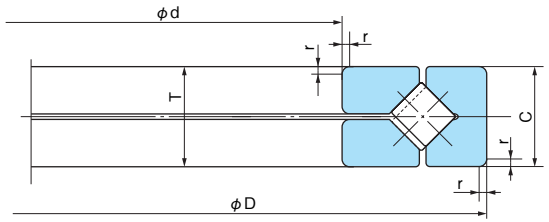


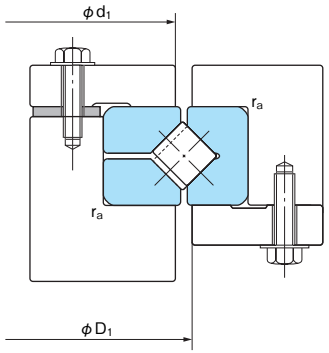


1N=0.102kgf

| Bearing No. | Boundary dimensions (mm) | | | | Basic dynamic load rating Ca (N) | Basic static load rating Coa (N) | | Limiting speed (min-1) | | Abutment and fillet dimensions (mm) | | | Bearing No. |
|---|---|---|---|---|---|---|---|---|---|---|---|---|---|
| | d | D | T (C) | r | | | | Grease lubrication | Oil lubrication | d1 (min) | D1 (max) | ra (max) | |
| ***200XRN28 (1)** | 200 | 280 | 30 | 1.5 | 144000 | 520000 | | 480 | 950 | 235 | 249 | 1 | ***200XRN28 (1)** |
| ***250XRN35 (1)** | 250 | 350 | 40 | 3 | 170000 | 680000 | | 400 | 800 | 302 | 312 | 1.5 | ***250XRN35 (1)** |
| ***300XRN40 (1)** | 300 | 400 | 38 | 3 | 268000 | 985000 | | 330 | 650 | 345 | 369 | 2.5 | ***300XRN40 (1)** |
| ***350XRN47 (1)** | 350 | 470 | 50 | 3 | 284000 | 1230000 | | 280 | 560 | 410 | 424 | 1.5 | ***350XRN47 (1)** |
| ***400XRN55 (1)** | 400 | 550 | 60 | 3.5 | 365000 | 1900000 | | 250 | 500 | 475 | 492 | 1.5 | ***400XRN55 (1)** |
| **0457XRN060** | 457.2 | 609.6 | 63.5 | 3.3 | 370000 | 1670000 | | 220 | 440 | 535 | 554 | 2 | **0457XRN060** |
| **580XRN76** | 580 | 760 | 80 | 6.4 | 830000 | 3800000 | | 170 | 340 | 667 | 691 | 4 | **580XRN76** |
| **600XRN83** | 600 | 830 | 80 | 3.3 | 1030000 | 4600000 | | 160 | 320 | 708 | 738 | 2 | **600XRN83** |
| **0685XRN091** | 685.8 | 914.4 | 79.375 | 3.3 | 1090000 | 5000000 | | 140 | 280 | 807 | 834 | 2 | **0685XRN091** |
| **0901XRN112** | 901.7 | 1117.6 | 82.55 | 3.3 | 1090000 | 5650000 | | 110 | 220 | 1013 | 1037 | 2 | **0901XRN112** |
| **1028XRN132** | 1028.7 | 1327.15 | 114.3 | 3.3 | 1830000 | 9300000 | | 90 | 180 | 1184 | 1221 | 2 | **1028XRN132** |

Note: (1) Inner and outer diameters for bearings marked with * have minus (-) deviation.
Remark: This table is for bearings used in longitudinal rotating applications (such as tables).

# Bearings for Rolling Stock

Various types of bearings are used as “rolling stock” bearings in railway axle-boxes. Cylindrical Roller Bearings and Tapered Roller Bearings are currently the bearing types most often favored for use since they can sustain high loads and provide excellent reliability.

## ● Journal Bearings

Double-row Cylindrical Roller Bearings or Double-row Tapered Roller Bearings for Journal applications are used for each of their capabilities. Cylindrical Roller Bearings are mostly used for easy maintenance and adaptability of high-speed. But in recent years, Tapered Roller Bearings are often used for adaptability of high-speed and long life without overhaul.

JIS (ISO) standard bearings are generally not used in journal bearing applications due to limited space and large load.

Journal bearings are specially designed wider bearings.

Cylindrical Roller bearings without a rib on the inner ring are used with the JB series Ball Bearings that handle axial loads.

Sealed Tapered Roller Bearings and sealed Cylindrical Roller Bearings with side ribs on the inner ring to carry thrust loads can be used for extended periods without overhaul. For this reason sealed bearings are used more often recently.

Bearings with a prefix JC, JT and JB are made to the specifications of Japan Railway Companies. A FCD type is made to NACHI design standards.

## ● Bearings for Gear box

These are bearings for a gearwheel and a pinion. They are mostly Tapered Roller Bearings, because they can sustain radial and large axial loads. They are lubricated with high viscosity gear oil, so the bearings for a pinion application are usually designed specially to prevent seizure at lower temperature. Also these bearings have been specially designed to withstand the severe vibration conditions which are normally found in this type application.

QT type bearings are made to the specifications of Japan Railway Companies, a ED type is made to NACHI design standards.

## ● Bearings for Traction motor

For traction motor, Deep-groove Ball Bearings and Cylindrical Roller Bearings without inner ring ribs are usually used together. These bearings have been specially designed to withstand high speed in grease lubrication and the severe vibrational load conditions.

NACHI bearing numbers for the traction motor applications have suffix JT for Deep-groove Ball Bearings and T, TS, or TSL for Cylindrical Roller Bearings.

## ● Special designs

Contact NACHI for the availability of other sizes.

# Journal Bearings for Railway Rolling Stock

## Cylindrical Roller Bearings

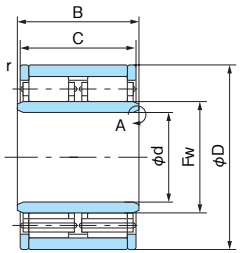


Design 1

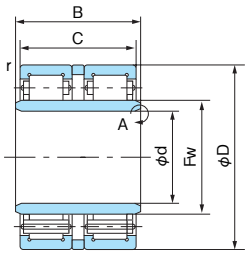


Design 2

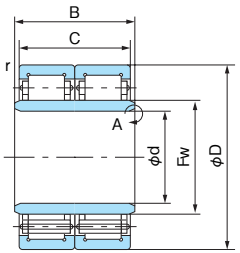


Design 3

Detail of A

a=4, 5, 7, 10, 12, 15

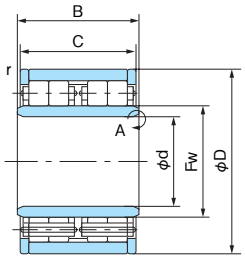


Design 4

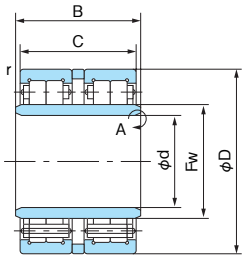


Design 5

Detail of A

a=1, 7, 12

1N=0.102kgf

| Bearing No. | Design No. | Boundary dimensions (mm) | | | | | | Basic dynamic load rating Cr (N) | Basic static load rating Cor (N) | Mass (kg) Reference |
|---|---|---|---|---|---|---|---|---|---|---|
| | | d | D | C | B | Fw | r | | | |
| FCD75 | 1 | 75 | 155 | 90 | 100 | 95 | 1 | 287000 | 410000 | 7 |
| FCD85S1 | 3 | 85 | 150 | 96 | 106 | 101.5 | 3 | 335000 | 590000 | 6 |
| FCF85S | 5 | 85 | 150 | 120 | 120 | 101.5 | 3 | 320000 | 560000 | 7 |
| FCD85S | 2 | 85 | 150 | 120 | 130 | 101.5 | 3 | 335000 | 590000 | 7 |
| FCD95 | 1 | 95 | 170 | 105 | 120 | 113.5 | 1 | 380000 | 645000 | 11 |
| FCF100 | 4 | 100 | 180 | 140 | 160 | 120 | 2 | 565000 | 1040000 | 14 |
| JC3 | 4 | 110 | 200 | 160 | 180 | 134 | 2 | 575000 | 1190000 | 19 |
| FCF110 | 4 | 110 | 210 | 160 | 180 | 136 | 2 | 720000 | 1280000 | 22 |
| FCF110S1 | 4 | 110 | 180 | 140 | 160 | 127 | 2 | 795000 | 1370000 | 28 |
| FCD110S5 | 1 | 110 | 220 | 160 | 180 | 138 | 2 | 795000 | 1370000 | 28 |
| JC1 | 1 | 110 | 225 | 140 | 150 | 138 | 2 | 750000 | 1430000 | 28 |
| JC2 | 1 | 110 | 235 | 160 | 180 | 141 | 2 | 835000 | 1550000 | 36 |
| FCF120S3 | 4 | 120 | 205 | 150 | 165 | 141 | 2 | 675000 | 1290000 | 18 |
| FCF120S1 | 4 | 120 | 205 | 160 | 170 | 141 | 2 | 715000 | 1390000 | 19 |
| FCF120S4 | 4 | 120 | 220 | 160 | 180 | 146 | 3 | 805000 | 1510000 | 23 |
| FCD120S7 | 1 | 120 | 220 | 160 | 180 | 146 | 3 | 835000 | 1580000 | 23 |
| JC11 | 1 | 120 | 240 | 160 | 180 | 150 | 2 | 810000 | 1580000 | 35 |
| FCF120S2 | 4 | 120 | 240 | 160 | 180 | 150 | 2 | 960000 | 1700000 | 35 |
| FCD120S1 | 2 | 120 | 260 | 190 | 195 | 154 | 4 | 1070000 | 1840000 | 50 |
| FCF130S | 4 | 130 | 220 | 160 | 170 | 152 | 2 | 785000 | 1550000 | 22 |
| FCD130S | 1 | 130 | 230 | 120 | 120 | 156 | 2 | 615000 | 1110000 | 19 |
| FCF130S1 | 4 | 130 | 240 | 160 | 170 | 158 | 2 | 880000 | 1610000 | 35 |
| JC5 | 1 | 130 | 260 | 160 | 180 | 163 | 2 | 875000 | 1710000 | 42 |
| JC29 | 2 | 130 | 270 | 210 | 215 | 164 | 5 | 1170000 | 2000000 | 56 |
| JC9 | 2 | 130 | 280 | 210 | 215 | 167 | 5 | 1070000 | 2090000 | 61 |
| FCF130 | 5 | 130 | 280 | 210 | 215 | 167 | 5 | 1340000 | 2360000 | 61 |
| FCD140B | 2 | 140 | 300 | 225 | 230 | 180 | 5 | 1440000 | 2500000 | 76 |
| FCD160S | 1 | 160 | 270 | 130 | 140 | 187 | 2 | 850000 | 1600000 | 27 |
| FCD160 | 1 | 160 | 280 | 150 | 180 | 190 | 2 | 970000 | 1820000 | 34 |

## Radial Ball Bearings

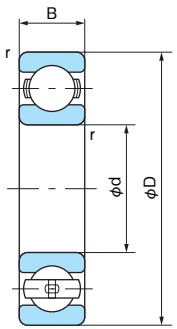


Design 6

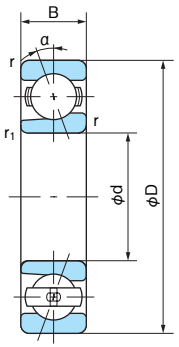


Design 7

| Bearing No. | Design No. | Boundary dimensions (mm) | | | | | Contact angle α° | Basic dynamic load rating Cr (N) | Basic static load rating Cor (N) | Mass (kg) Reference |
|---|---|---|---|---|---|---|---|---|---|---|
| | | d | D | B | r | r1 | | | | |
| JB8A | 6 | 70 | 150 | 35 | 3.5 | — | — | 80000 | 153000 | 4 |
| JB1D | 7 | 85 | 180 | 41 | 4 | 2 | 20 | 98500 | 204000 | 5 |
| JB1E | 7 | 85 | 180 | 41 | 4 | 2 | 20 | 114000 | 255000 | 5 |
| JB2 | 7 | 100 | 215 | 47 | 4 | 2 | 20 | 128000 | 292000 | 7 |
| JB3 | 7 | 110 | 215 | 47 | 4 | 2 | 30 | 164000 | 355000 | 6 |
| JB9 | 6 | 125 | 250 | 55 | 2 | — | — | 143000 | 350000 | 13 |
| JB4 | 6 | 125 | 250 | 55 | 4 | — | — | 172000 | 395000 | 12 |

# Journal Bearings for Railway Rolling Stock

## Cylindrical Roller Bearings

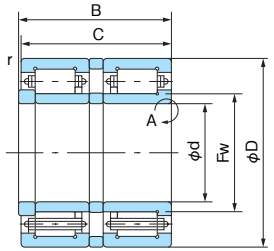


Design 1

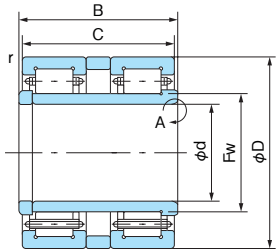


Design 2

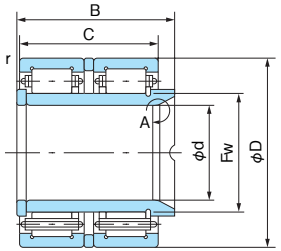


Design 3

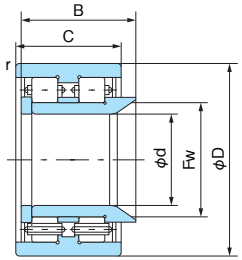


Design 4

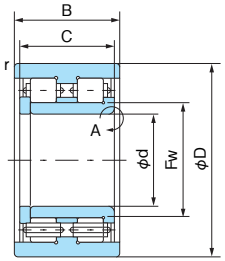


Design 5

## Sealed Cylindrical Roller Bearings

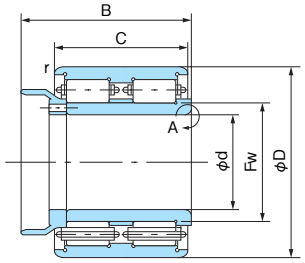


Design 6

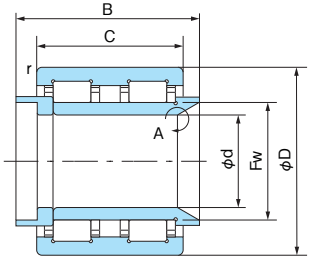


Design 7

Detail of A

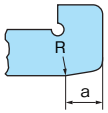


a=7, 10, 14





1N=0.102kgf

| Bearing No. | Design No. | Boundary dimensions (mm) | | | | | | Basic dynamic load rating Cr (N) | Basic static load rating Cor (N) | Mass (kg) Reference |
|---|---|---|---|---|---|---|---|---|---|---|
| | | d | D | C | B | Fw | r | | | |
| FCD85S2 | 2 | 85 | 150 | 85 | 86.5 | 101.5 | 2 | 425000 | 765000 | 14 |
| FCD100S | 1 | 100 | 200 | 170 | 170 | 125 | 4 | 650000 | 1100000 | 25 |
| FCD110S3 | 1 | 110 | 220 | 180 | 183 | 138 | 3.5 | 795000 | 1370000 | 28 |
| FCD110S7 | 2 | 110 | 220 | 175 | 180 | 138 | 3.5 | 715000 | 1190000 | 29 |
| JC6 | 2 | 110 | 220 | 180 | 180 | 138 | 3.5 | 625000 | 1190000 | 30 |
| FCD110S9 | 1 | 110 | 220 | 180 | 183 | 138 | 3.5 | 795000 | 1370000 | 30 |
| FCD110S11 | 2 | 110 | 220 | 180 | 185 | 138 | 3.5 | 795000 | 1370000 | 31 |
| JC36 | 6 | 120 | 220 | 145 | 171 | 146 | 1 | 700000 | 1120000 | 22 |
| FCD120S20 | 6 | 120 | 220 | 160 | 229.5 | 146 | 1 | 755000 | 1230000 | 24 |
| FCD120S21 | 5 | 120 | 220 | 160 | 185.5 | 146 | 1 | 755000 | 1230000 | 24 |
| FCD120S22 | 7 | 120 | 220 | 160 | 242 | 144 | 1 | 815000 | 1320000 | 24 |
| FCD120S9 | 1 | 120 | 220 | 180 | 183 | 142 | 3.5 | 835000 | 1580000 | 26 |
| JC30・32 | 6 | 120 | 230 | 150 | 171 | 147 | 1 | 755000 | 1300000 | 30 |
| JC34 | 2 | 120 | 230 | 165 | 170 | 145 | 4 | 935000 | 1440000 | 31 |
| JC26 | 6 | 120 | 240 | 160 | 193 | 150 | 1 | 850000 | 1420000 | 35 |
| JC12 | 2 | 120 | 240 | 176 | 180 | 150 | 4 | 805000 | 1580000 | 38 |
| JC17 | 6 | 120 | 240 | 170 | 218 | 150 | 1 | 815000 | 1580000 | 40 |
| FCD120S4 | 1 | 120 | 240 | 180 | 183 | 150 | 4 | 855000 | 1470000 | 35 |
| FCD120S5 | 2 | 120 | 240 | 180 | 185 | 150 | 4 | 855000 | 1470000 | 35 |
| FCD120S3 | 2 | 120 | 260 | 190 | 195 | 154 | 4 | 1100000 | 1840000 | 50 |
| JC38 | 2 | 125 | 235 | 165 | 170 | 150 | 3 | 940000 | 1460000 | 32 |
| FCD130S8 | 6 | 130 | 240 | 160 | 229.5 | 158 | 1 | 855000 | 1350000 | 34 |
| JC21 | 3 | 130 | 260 | 180 | 205.5 | 163 | 4 | 825000 | 1610000 | 46 |
| FCD130S6 | 2 | 130 | 260 | 180 | 185 | 163 | 4 | 1030000 | 1610000 | 45 |
| JC37 | 2 | 130 | 265 | 166 | 166 | 161.5 | 3 | 1140000 | 1710000 | 43 |
| FCD130S3 | 4 | 130 | 270 | 153 | 165 | 160.5 | 3 | 715000 | 1110000 | 37 |
| JC16 | 2 | 130 | 280 | 210 | 210 | 167 | 5 | 1070000 | 2090000 | 61 |

NACHI

# Journal Bearings for Railway Rolling Stock

## Sealed Tapered Roller Bearings

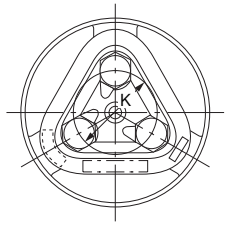


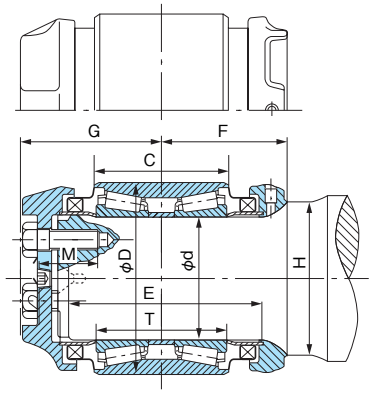


1N=0.102kgf

| Bearing No. | Axle class | Size of journal | Applicable bearing No. | Boundary dimensions mm (inch) d | D | C | T | E | F | G | H | K | Bolt size | M | Basic dynamic load rating Cr (N) | Basic static load rating Cor (N) | Mass (kg) Reference |
|---|---|---|---|---|---|---|---|---|---|---|---|---|---|---|---|---|---|
| JT 9 | — | 110 | JT 9 | 110 | 175 | 130 | 125 | 206 | 130 | 140.5 | 155 | 75 | M22 | 50 | 375000 | 935000 | 22 |
| JT14 | — | 110 | JT14 | 110 | 190 | 150 | 145 | — | 150 | 134.4 | 150 | 75 | M22 | 60 | 600000 | 1110000 | 25 |
| JT10 | — | 120 | JT10 | 120 | 195 | 142 | 136 | 217 | 142 | 149 | 155 | 75 | M22 | 50 | 495000 | 1250000 | 27 |
| JT12 | — | 120 | JT12 | 120 | 220 | 155 | 155 | — | 155 | 159.4 | 150 | 75 | M22 | 60 | 840000 | 1540000 | 39 |
| JT11 | — | 130 | JT11 | 130 | 208 | 152 | 146 | 227 | 152 | 150.7 | 165 | 89 | M22 | 50 | 510000 | 1250000 | 30 |
| AP50B | B | 4-1/4 × 8 | HM120848N/ HM120817XDN | 101.600 (4) | 165.100 (6-1/2) | 114.300 (4-1/12) | 107.950 (4-1/4) | 200.025 (7-5/8) | 117.5 (4-5/8) | 130.2 (5-1/8) | 127 (5) | 61.9 (2-7/16) | 3/4—10UNC-2A | 44.45 (1-3/4) | 390000 | 800000 | 20 |
| AP50C | C | 5 × 9 | HM124646N/ HM124618XDN | 119.062 (4-11/160) | 195.262 (7-11/16) | 142.875 (5-5/8) | 136.525 (5-3/8) | 217.488 (8-9/16) | 134.9 (5-5/16) | 147.6 (5-13/16) | 149.2 (5-7/8) | 76.2 (3) | 7/8—9UNC-2A | 50.80 (2) | 590000 | 1250000 | 33 |
| AP50D | D | 5-1/2 × 10 | HM127446N/ HM127415XDN | 131.762 (5-3/16) | 207.962 (8-3/16) | 152.400 (6) | 146.050 (5-3/4) | 227.013 (8-15/16) | 139.7 (5-1/2) | 149.2 (5-7/8) | 161.9 (6-3/8) | 88.9 (3-1/2) | 7/8—9UNC-2A | 50.80 (2) | 590000 | 1250000 | 37 |
| AP50E | E | 6 × 11 | HM129848N/ HM129814XDN | 144.462 (5-11/16) | 220.662 (8-11/16) | 163.512 (6-7/16) | 155.575 (6-1/8) | 241.300 (9-1/2) | 150.8 (5-15/16) | 165.1 (6-1/2) | 177.8 (7) | 98.4 (3-7/8) | 1—8UNC-2A | 57.15 (2-1/4) | 650000 | 1480000 | 47 |
| AP50F | F | 6-1/2 × 12 | HM133444N/ HM133416XDN | 157.162 (6-3/16) | 252.412 (9-15/16) | 184.150 (7-1/4) | 177.800 (7) | 266.700 (10-1/2) | 163.5 (6-7/16) | 176.2 (6-15/16) | 190.5 (7-1/2) | 108.0 (4-1/4) | 1-1/8—7UNC-2A | 63.50 (2-1/2) | 900000 | 1930000 | 66 |
| AP50G | G | 7 × 12 | HM136948N/ HM136916XDN | 177.800 (7) | 276.225 (10-7/8) | 185.739 (7-5/16) | 180.975 (7-1/8) | 254.000 (10) | 150.8 (5-15/16) | 177.8 (7) | 203.2 (8) | 117.5 (4-5/8) | 1-1/4—7UNC-2A | 69.85 (2-3/4) | 975000 | 2170000 | 86 |

## Bearings for Pinion

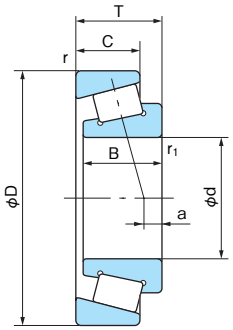

Design 1

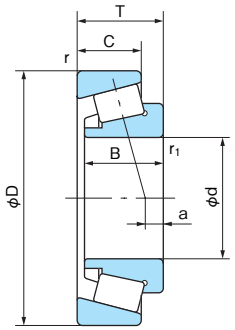

Design 2

1N=0.102kgf

| Bearing No. | Design No. | Boundary dimensions (mm) | | | | | | | Load center (mm) | | Basic dynamic load rating Cr (N) | Basic static load rating Cor (N) | Mass (kg) Reference |
|---|---|---|---|---|---|---|---|---|---|---|---|---|---|
| | | d | D | T | C | B | r | $r_1$ | a (1) | e | | | |
| **QT9** | 1 | 70 | 150 | 38 | 25 | 35 | 3.5 | 3.5 | –8.2 | 0.81 | 165000 | 200000 | 3 |
| **QT9B-2** | 2 | 70 | 150 | 38 | 25 | 35 | 3.5 | 3.5 | –8.2 | 0.81 | 165000 | 200000 | 3 |
| **QT31** | 2 | 70 | 150 | 40 | 27 | 37 | 2.5 | 3 | –6.5 | 0.81 | 175000 | 205000 | 3 |
| **30315ED** | 1 | 75 | 160 | 40 | 31 | 37 | 3.5 | 3.5 | 7.6 | 0.35 | 212000 | 238000 | 3 |
| **QT7** | 1 | 75 | 160 | 40 | 27 | 37 | 3.5 | 3.5 | –10.2 | 0.81 | 192000 | 218000 | 3 |
| **TSM15ED** | 1 | 75 | 175 | 52 | 40 | 50 | 3.5 | 3.5 | 8.1 | 0.46 | 282000 | 320000 | 6 |
| **QT4** | 1 | 80 | 170 | 42.5 | 28 | 39 | 3.5 | 3.5 | –10.0 | 0.81 | 221000 | 256000 | 4 |
| **QT18** | 1 | 85 | 180 | 45.5 | 29 | 42 | 4.0 | 4 | –9.5 | 0.81 | 244000 | 284000 | 5 |

Note: (1) Minus value of load center indicates center is outside cone backface.





## Bearings for Gearwheel

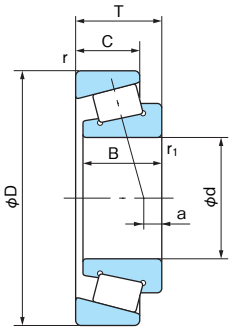

Design 1

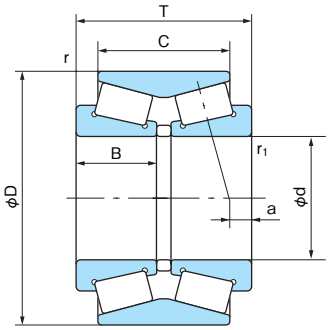

Design 2

1N=0.102kgf

| Bearing No. | Design No. | Boundary dimensions (mm) | | | | | | | Load center (mm) | | Basic dynamic load rating Cr (N) | Basic static load rating Cor (N) | Mass (kg) Reference |
|---|---|---|---|---|---|---|---|---|---|---|---|---|---|
| | | d | D | T | C | B | r | $r_1$ | a (1) | e | | | |
| **32936ED** | 1 | 180 | 250 | 45 | 34 | 42 | 3 | 3 | –3.7 | 0.39 | 325000 | 620000 | 6 |
| **QT1** | 2 | 190 | 280 | 110 | 85 | 46 | 1 | 4 | –23.0 | 0.67 | 575000 | 1170000 | 23 |
| **32038ED** | 1 | 190 | 290 | 64 | 52 | 60 | 3.5 | 3.5 | 2.4 | 0.37 | 550000 | 955000 | 14 |
| **QT6** | 2 | 190 | 300 | 110 | 85 | 46 | 1 | 4 | –26.5 | 0.67 | 670000 | 1260000 | 27 |
| **QT29** | 1 | 193.675 | 282.575 | 50.8 | 36.513 | 47.625 | 2.5 | 3 | –4.3 | 0.42 | 345000 | 605000 | 11 |
| **QT26** | 1 | 195 | 280 | 58 | 41 | 60 | 3.5 | 3.5 | 4.4 | 0.37 | 410000 | 745000 | 11 |
| **QT25** | 1 | 200 | 280 | 51 | 41 | 48 | 2.5 | 3 | –3.6 | 0.37 | 345000 | 680000 | 10 |
| **32940ED** | 1 | 200 | 280 | 51 | 41 | 48 | 3.5 | 3.5 | –3.6 | 0.37 | 345000 | 680000 | 10 |
| **QT13** | 2 | 200 | 290 | 110 | 85 | 46 | 1 | 4 | –26.5 | 0.67 | 605000 | 1280000 | 21 |
| **QT28** | 2 | 202.5 | 290 | 110 | 85 | 46 | 0.6 | 4 | –27.3 | 0.67 | 605000 | 1270000 | 21 |
| **QT33** | 1 | 205 | 283 | 51 | 41 | 48 | 2.5 | 3 | –3.6 | 0.37 | 355000 | 695000 | 10 |
| **QT5** | 1 | 210 | 320 | 70 | 56 | 66 | 3.5 | 3.5 | 2.5 | 0.40 | 630000 | 1110000 | 19 |
| **QT24** | 1 | 210 | 320 | 70 | 56 | 75 | 3.5 | 3.5 | 2.5 | 0.40 | 630000 | 1110000 | 20 |
| **QT19-1** | 1 | 214 | 330 | 70 | 56 | 70 | 3.5 | 3.5 | 1.5 | 0.40 | 670000 | 1190000 | 21 |
| **QT32** | 1 | 218 | 315 | 65 | 49 | 70 | 2.5 | 3 | 4.1 | 0.37 | 605000 | 1180000 | 16 |

Note: (1) Minus value of load center indicates center is outside cone backface.

# Ball Bearings for Traction Motor

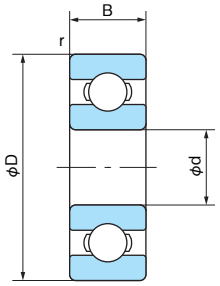


Design 1

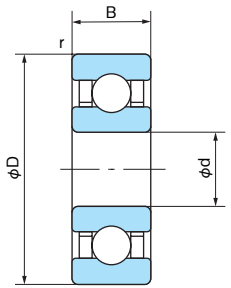


Design 2

1N=0.102kgf

| Bearing No. | Design No. | Boundary dimensions (mm) | | | | | Basic dynamic load rating Cr (N) | Basic static load rating Cor (N) | Mass (kg) Reference |
|---|---|---|---|---|---|---|---|---|---|
| | | d | D | C | B | r | | | |
| **6311JT** | 1 | 55 | 120 | 29 | 29 | 3 | 71500 | 44500 | 1.4 |
| **6312JT** | 1 | 60 | 130 | 31 | 31 | 3.5 | 81500 | 52000 | 1.7 |
| **6314JT** | 1 | 70 | 150 | 35 | 35 | 3.5 | 104000 | 68000 | 2.5 |
| **6219JT** | 1 | 95 | 170 | 32 | 32 | 3.5 | 109000 | 815000 | 2.6 |
| **6219T** | 2 | 95 | 170 | 32 | 32 | 3.5 | 109000 | 815000 | 3.0 |





# Cylindrical Roller Bearings for Traction Motor

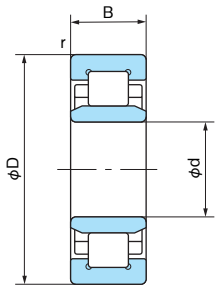


Design 1

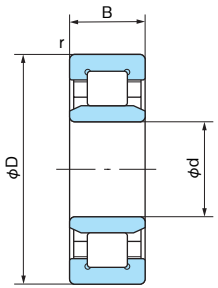


Design 2

1N=0.102kgf

| Bearing No. | Design No. | Boundary dimensions (mm) | | | | Basic dynamic load rating Cr (N) | Basic static load rating Cor (N) | Mass (kg) Reference |
|---|---|---|---|---|---|---|---|---|
| | | d | D | B | r | | | |
| **NU214T** | 1 | 70 | 125 | 24 | 1.5 | 83000 | 95000 | 1.5 |
| **NU314T** | 1 | 70 | 150 | 35 | 2.1 | 158000 | 220000 | 3.1 |
| **NU315T** | 1 | 75 | 160 | 37 | 2.1 | 190000 | 205000 | 4.0 |
| **NU316T** | 1 | 80 | 170 | 39 | 2.1 | 190000 | 207000 | 4.6 |
| **NU316TSL** | 2 | 80 | 170 | 39 | 2.1 | | | |
| **NU219T** | 1 | 95 | 170 | 32 | 2.1 | 165000 | 195000 | 3.5 |
| **NU219TS** | 2 | 95 | 170 | 32 | 2.1 | | | |
| **NU220T** | 1 | 100 | 180 | 34 | 2.1 | 183000 | 217000 | 4.3 |

NACHI

# Sheave Bearings

This bearing type is designed as a double-row, full complement Cylindrical Roller bearing with ribs on both inner and outer rings. These bearings will sustain heavy radial load, and will handle moment load and will also take some axial load.

Sheave bearings are suitable for a wide variety of uses in addition to sheaves. They are used for hoisting drum and wheel applications, and other applications which operate under heavy load at low speed.

| Bearing series | Description | Bearing series | Description |
|---|---|---|---|
| E50 | This bearing series is designed for sheave application. It is a sealed (shield or seal) bearing and has a surface coating. The E50 series is made with two shields. The E50...NR and E50...NRNT have two snap rings in the outer ring. Series E50...NR is made with two shields, while the series E50...NRNT is made with two rubber seals. | RB48、RC48<br>RB49、RC49 | These bearings are designed for general use. When mounting two or more bearings on an axle, the RB type should be used as a fixed side bearing and the RC type used as a free side bearing. |

**Deviation of bore diameter and bearing width** Unit: μm

| Nominal bearing bore diameter d (mm) | | Deviation of d | | Deviation of B | |
|---|---|---|---|---|---|
| Over | Incl. | High | Low | High | Low |
| 30 | 50 | 0 | –12 | 0 | –120 |
| 50 | 80 | 0 | –15 | 0 | –150 |
| 80 | 120 | 0 | –20 | 0 | –200 |
| 120 | 150 | 0 | –25 | 0 | –250 |
| 150 | 180 | 0 | –25 | 0 | –250 |
| 180 | 250 | 0 | –30 | 0 | –300 |
| 250 | 315 | 0 | –35 | 0 | –350 |
| 315 | 400 | 0 | –40 | 0 | –400 |
| 400 | 500 | 0 | –45 | 0 | –450 |

**Deviation of outside diameter of outer ring** Unit: μm

| Nominal bearing outside diameter D (mm) | | Deviation of D | |
|---|---|---|---|
| Over | Incl. | High | Low |
| 30 | 50 | — | — |
| 50 | 80 | 0 | –13 |
| 80 | 120 | 0 | –15 |
| 120 | 150 | 0 | –18 |
| 150 | 180 | 0 | –25 |
| 180 | 250 | 0 | –30 |
| 250 | 315 | 0 | –35 |
| 315 | 400 | 0 | –40 |
| 400 | 500 | 0 | –45 |
| 500 | 630 | 0 | –50 |
| 630 | 800 | 0 | –75 |

**Radial Clearance of Series 5000** Unit: μm

| Nominal bearing outside diameter D (mm) | | Standard radial clearance | |
|---|---|---|---|
| Over | Incl. | Low | High |
| | 70 | 35 | 70 |
| 70 | 80 | 40 | 75 |
| 80 | 100 | 45 | 90 |
| 100 | 125 | 55 | 105 |
| 125 | 150 | 65 | 115 |
| 150 | 180 | 65 | 120 |
| 180 | 240 | 65 | 130 |
| 240 | 280 | 70 | 135 |
| 280 | 310 | 70 | 140 |
| 310 | 340 | 75 | 150 |
| 340 | 360 | 90 | 165 |
| 360 | 420 | 100 | 180 |
| 420 | 460 | 110 | 195 |
| 460 | 520 | 125 | 215 |
| 520 | 600 | 140 | 235 |
| 600 | 650 | 155 | 275 |
| 650 | 700 | 180 | 300 |

**Radial Clearance of Series 4800/4900** Unit: μm

| Nominal bearing outside diameter D (mm) | | Standard radial clearance | |
|---|---|---|---|
| Over | Incl. | Low | High |
| | 70 | 40 | 75 |
| 70 | 80 | 40 | 75 |
| 80 | 100 | 45 | 90 |
| 100 | 125 | 55 | 105 |
| 125 | 150 | 65 | 115 |
| 150 | 180 | 65 | 120 |
| 180 | 240 | 65 | 130 |
| 240 | 280 | 70 | 135 |
| 280 | 310 | 70 | 140 |
| 310 | 340 | 75 | 150 |
| 340 | 360 | 90 | 165 |
| 360 | 420 | 100 | 180 |
| 420 | 500 | 110 | 195 |

NACHI

# Sheave Bearings
## Series 5000

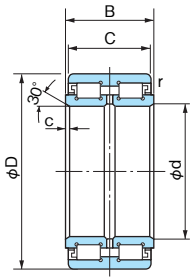


Shield type (E50)

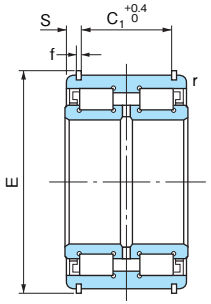


Shield type (E50...NR)
with snap rings

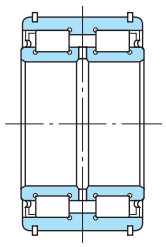

Rubber seal type (E50...NRNT)
with snap rings

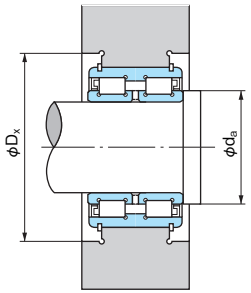


1N=0.102kgf

| Boundary dimensions (mm) | | | | | | | | | | Bearing No. | | | | Basic load rating | | Limiting speed ($min^{-1}$) | Abutment and fillet dimensions (mm) | | Mass (kg) |
|---|---|---|---|---|---|---|---|---|---|---|---|---|---|---|---|---|---|---|---|
| d | D | B | C | r (min) | c | E | $C_1$ | S | f | Without snap ring with shields | With snap rings with shields | | With snap rings and rubber seals | Cr (N) | Cor (N) | Grease lubrication | da (min) | Dx (min) | |
| **40** | 68 | 38 | 37 | 0.6 | 1.5 | 71.8 | 28 | 4.5 | 2 | **E5008** | **E5008NR** | | **E5008NRNT** | 79000 | 125000 | 2500 | 46 | 80 | 0.57 |
| **45** | 75 | 40 | 39 | 0.6 | 1.5 | 78.8 | 30 | 4.5 | 2 | **E5009** | **E5009NR** | | **E5009NRNT** | 95000 | 144000 | 2200 | 51 | 87 | 0.71 |
| **50** | 80 | 40 | 39 | 0.6 | 1.5 | 83.8 | 30 | 4.5 | 2 | **E5010** | **E5010NR** | | **E5010NRNT** | 99500 | 158000 | 2000 | 56 | 92 | 0.77 |
| **55** | 90 | 46 | 45 | 0.6 | 2 | 94.8 | 34 | 5.5 | 2.5 | **E5011** | **E5011NR** | | **E5011NRNT** | 117000 | 193000 | 1800 | 63 | 104 | 1.18 |
| **60** | 95 | 46 | 45 | 0.6 | 2 | 99.8 | 34 | 5.5 | 2.5 | **E5012** | **E5012NR** | | **E5012NRNT** | 123000 | 208000 | 1650 | 68 | 109 | 1.26 |
| **65** | 100 | 46 | 45 | 0.6 | 2 | 104.8 | 34 | 5.5 | 2.5 | **E5013** | **E5013NR** | | **E5013NRNT** | 128000 | 224000 | 1500 | 73 | 114 | 1.34 |
| **70** | 110 | 54 | 53 | 0.6 | 2 | 114.5 | 42 | 5.5 | 2.5 | **E5014** | **E5014NR** | | **E5014NRNT** | 170000 | 285000 | 1400 | 78 | 124 | 1.91 |
| **75** | 115 | 54 | 53 | 0.6 | 2 | 119.5 | 42 | 5.5 | 2.5 | **E5015** | **E5015NR** | | **E5015NRNT** | 177000 | 305000 | 1350 | 83 | 129 | 2.01 |
| **80** | 125 | 60 | 59 | 0.6 | 2 | 129.5 | 48 | 5.5 | 2.5 | **E5016** | **E5016NR** | | **E5016NRNT** | 250000 | 430000 | 1250 | 88 | 139 | 2.71 |
| **85** | 130 | 60 | 59 | 0.6 | 2 | 134.5 | 48 | 5.5 | 2.5 | **E5017** | **E5017NR** | | **E5017NRNT** | 255000 | 445000 | 1150 | 93 | 144 | 2.85 |
| **90** | 140 | 67 | 66 | 0.6 | 2.5 | 145.4 | 54 | 6 | 2.5 | **E5018** | **E5018NR** | | **E5018NRNT** | 305000 | 540000 | 1100 | 100 | 156 | 3.81 |
| **95** | 145 | 67 | 66 | 0.6 | 2.5 | 150.4 | 54 | 6 | 2.5 | **E5019** | **E5019NR** | | **E5019NRNT** | 310000 | 560000 | 1050 | 105 | 161 | 3.97 |
| **100** | 150 | 67 | 66 | 0.6 | 2.5 | 155.4 | 54 | 6 | 2.5 | **E5020** | **E5020NR** | | **E5020NRNT** | 315000 | 585000 | 1000 | 110 | 165 | 4.14 |
| **110** | 170 | 80 | 79 | 1 | 3 | 175.4 | 65 | 7 | 2.5 | **E5022** | **E5022NR** | | **E5022NRNT** | 380000 | 695000 | 900 | 122 | 186 | 6.69 |
| **120** | 180 | 80 | 79 | 1 | 3 | 188.4 | 65 | 7 | 3 | **E5024** | **E5024NR** | | **E5024NRNT** | 400000 | 750000 | 850 | 132 | 198 | 7.24 |
| **130** | 200 | 95 | 94 | 1 | 3 | 208.4 | 77 | 8.5 | 3 | **E5026** | **E5026NR** | | **E5026NRNT** | 535000 | 1000000 | 750 | 142 | 218 | 10.9 |
| **140** | 210 | 95 | 94 | 1 | 3 | 218.4 | 77 | 8.5 | 3 | **E5028** | **E5028NR** | | **E5028NRNT** | 540000 | 1070000 | 700 | 152 | 228 | 11.9 |
| **150** | 225 | 100 | 99 | 1 | 3.5 | 233.4 | 81 | 9 | 3 | **E5030** | **E5030NR** | | **E5030NRNT** | 620000 | 1210000 | 650 | 164 | 243 | 14.0 |
| **160** | 240 | 109 | 108 | 1.5 | 3.5 | 248.4 | 89 | 9.5 | 3 | **E5032** | **E5032NR** | | **E5032NRNT** | 715000 | 1390000 | 600 | 174 | 258 | 17.1 |
| **170** | 260 | 122 | 121 | 1.5 | 3.5 | 270 | 99 | 11 | 4 | **E5034** | **E5034NR** | | **E5034NRNT** | 850000 | 1730000 | 600 | 184 | 283 | 23.6 |
| **180** | 280 | 136 | 135 | 1.5 | 3.5 | 294 | 110 | 12.5 | 5 | **E5036** | **E5036NR** | | **E5036NRNT** | 1060000 | 2140000 | 550 | 194 | 311 | 31.7 |
| **190** | 290 | 136 | 135 | 1.5 | 3.5 | 306 | 110 | 12.5 | 5 | **E5038** | **E5038NR** | | **E5038NRNT** | 1110000 | 2230000 | 500 | 204 | 323 | 32.8 |
| **200** | 310 | 150 | 149 | 1.5 | 3.5 | 326 | 120 | 14.5 | 5 | **E5040** | **E5040NR** | | **E5040NRNT** | 1300000 | 2650000 | 500 | 214 | 343 | 42.2 |
| **220** | 340 | 160 | 159 | 1.5 | 4 | 356 | 130 | 14.5 | 6 | **E5044** | **E5044NR** | | **E5044NRNT** | 1300000 | 3100000 | 450 | 236 | 378 | 54.9 |
| **240** | 360 | 160 | 159 | 1.5 | 4 | 376 | 130 | 14.5 | 6 | **E5048** | **E5048NR** | | **E5048NRNT** | 1560000 | 3350000 | 400 | 256 | 398 | 58.7 |
| **260** | 400 | 190 | 189 | 2 | 5 | 416 | 154 | 17.5 | 6 | **E5052** | **E5052NR** | | **E5052NRNT** | 2110000 | 4500000 | 350 | 280 | 438 | 88.1 |
| **280** | 420 | 190 | 189 | 2 | 5 | 440 | 154 | 17.5 | 7 | **E5056** | **E5056NR** | | **E5056NRNT** | 2200000 | 4850000 | 350 | 300 | 462 | 93.9 |
| **300** | 460 | 218 | 216 | 2 | 5 | 480 | 176 | 20 | 8 | **E5060** | — | | — | 2650000 | 5850000 | 350 | 320 | 508 | 134 |
| **320** | 480 | 218 | 216 | 2 | 5 | 500 | 176 | 20 | 8 | **E5064** | — | | — | 2680000 | 6150000 | 300 | 340 | 528 | 145 |
| **340** | 520 | 243 | 241 | 2.5 | 6 | 544 | 194 | 23.5 | 8 | **E5068** | — | | — | 3350000 | 7550000 | 300 | 362 | 577 | 180 |

Remark: The bearings must be mounted without a clearance between two separate inner rings.

NACHI

# Sheave Bearings

## Series 5000

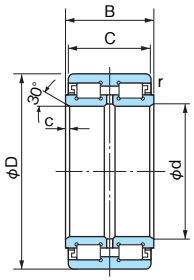


Shield type (E50)

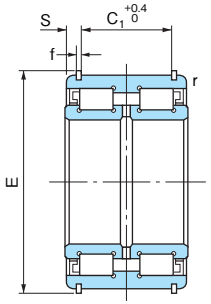


Shield type (E50...NR)
with snap rings

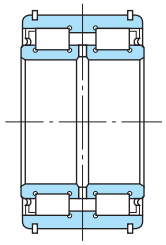

Rubber seal type (E50...NRNT)
with snap rings

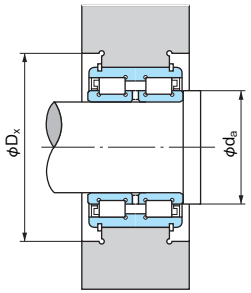


1N=0.102kgf

| Boundary dimensions (mm) | | | | | | | | | | Bearing No. | | | | Basic load rating | | Limiting speed ($min^{-1}$) Grease lubrication | Abutment and fillet dimensions (mm) | | Mass (kg) |
|---|---|---|---|---|---|---|---|---|---|---|---|---|---|---|---|---|---|---|---|
| d | D | B | C | r (min) | c | E | $C_1$ | S | f | Without snap ring with shields | With snap rings with shields | | With snap rings and rubber seals | Cr (N) | Cor (N) | | da (min) | Dx (min) | |
| **360** | 540 | 243 | 241 | 2.5 | 6 | 564 | 194 | 23.5 | 10 | **E5072** | — | | — | 3400000 | 7950000 | 250 | 382 | 597 | 190 |
| **380** | 560 | 243 | 241 | 2.5 | 6 | 584 | 194 | 23.5 | 10 | **E5076** | — | | — | 3550000 | 8300000 | 250 | 402 | 617 | 200 |
| **400** | 600 | 272 | 270 | 2.5 | 6 | 630 | 210 | 30 | 12 | **E5080** | — | | — | 4220000 | 10100000 | 250 | 422 | 666 | 265 |
| **420** | 620 | 272 | 270 | 2.5 | 6 | 650 | 210 | 30 | 12 | **E5084** | — | | — | 4350000 | 10500000 | 230 | 442 | 686 | 275 |
| **440** | 650 | 280 | 278 | 3 | 8 | 680 | 210 | 34 | 12 | **E5088** | — | | — | 4550000 | 10900000 | 220 | 464 | 719 | 310 |
| **460** | 680 | 300 | 298 | 3 | 8 | 710 | 230 | 34 | 12 | **E5092** | — | | — | 5050000 | 12100000 | 200 | 484 | 749 | 365 |
| **480** | 700 | 300 | 298 | 3 | 8 | 730 | 230 | 34 | 12 | **E5096** | — | | — | 5150000 | 12500000 | 200 | 504 | 769 | 380 |

Remark: The bearings must be mounted without a clearance between two separate inner rings.

# Sheave Bearings
## Series 4800/4900

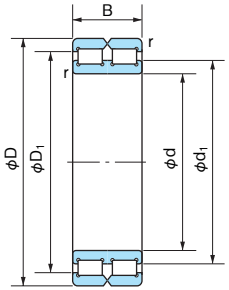

For fixed end (RB)

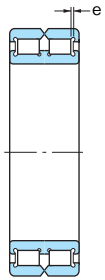

For free end (RC)

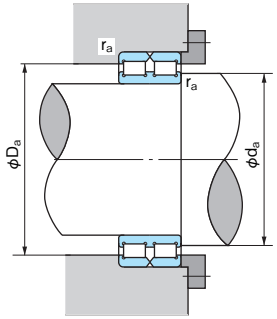


1N=0.102kgf

| Boundary dimensions (mm) | | | | | | | Bearing No. | | Basic load rating | | Limiting speed (min-1) | | Abutment and fillet dimensions (mm) | | | Mass (kg) | Basic No. |
|---|---|---|---|---|---|---|---|---|---|---|---|---|---|---|---|---|---|
| d | D | B | d1 | D1 | r (min) | e (1) | For fixed end | For free end | Cr (N) | Cor (N) | Grease lubrication | Oil lubrication | da (min) | Da (max) | ra (max) | | |
| 50 | 72 | 22 | 58 | 63.5 | 0.6 | 1 | RB4910 | RC4910 | 49000 | 83000 | 2000 | 4000 | 56 | 66 | 0.6 | 0.30 | 4910 |
| 60 | 85 | 25 | 69.5 | 76 | 1 | 1 | RB4912 | RC4912 | 68000 | 118000 | 1700 | 3400 | 67 | 78 | 1 | 0.46 | 4912 |
| 70 | 100 | 30 | 81.5 | 88.5 | 1 | 1 | RB4914 | RC4914 | 105000 | 193000 | 1400 | 2800 | 77 | 93 | 1 | 0.79 | 4914 |
| 80 | 110 | 30 | 92.5 | 99.5 | 1 | 1 | RB4916 | RC4916 | 113000 | 221000 | 1250 | 2500 | 87 | 103 | 1 | 0.88 | 4916 |
| 90 | 125 | 35 | 103 | 111.5 | 1.1 | 1 | RB4918 | RC4918 | 150000 | 300000 | 1100 | 2200 | 98 | 117 | 1 | 1.37 | 4918 |
| 100 | 140 | 40 | 116 | 125.5 | 1.1 | 1.5 | RB4920 | RC4920 | 194000 | 400000 | 1000 | 2000 | 108 | 132 | 1 | 2.01 | 4920 |
| 110 | 150 | 40 | 124.5 | 134 | 1.1 | 1.5 | RB4922 | RC4922 | 202000 | 430000 | 900 | 1800 | 118 | 142 | 1 | 2.18 | 4922 |
| 120 | 165 | 45 | 138.5 | 148.5 | 1.1 | 2 | RB4924 | RC4924 | 226000 | 560000 | 850 | 1700 | 128 | 157 | 1 | 2.98 | 4924 |
| 130 | 180 | 50 | 148.5 | 160.5 | 1.5 | 2 | RB4926 | RC4926 | 262000 | 555000 | 750 | 1500 | 140 | 170 | 1.5 | 3.97 | 4926 |
| 140 | 190 | 50 | 159 | 171 | 1.5 | 2 | RB4928 | RC4928 | 271000 | 595000 | 700 | 1400 | 150 | 180 | 1.5 | 4.26 | 4928 |
| 150 | 190 | 40 | 164.5 | 173.5 | 1.1 | 1.5 | RB4830 | RC4830 | 233000 | 575000 | 650 | 1300 | 158 | 182 | 1 | 2.90 | 4830 |
| | 210 | 60 | 171.5 | 186 | 2 | 2 | RB4930 | RC4930 | 405000 | 860000 | 650 | 1300 | 161 | 199 | 2 | 6.70 | 4930 |
| 160 | 200 | 40 | 176 | 185.5 | 1.1 | 1.5 | RB4832 | RC4832 | 242000 | 615000 | 650 | 1300 | 168 | 192 | 1 | 3.05 | 4832 |
| | 220 | 60 | 184.5 | 199.5 | 2 | 2 | RB4932 | RC4932 | 425000 | 935000 | 600 | 1200 | 171 | 209 | 2 | 7.03 | 4932 |
| 170 | 215 | 45 | 186 | 196.5 | 1.1 | 2 | RB4834 | RC4834 | 264000 | 650000 | 600 | 1200 | 178 | 207 | 1 | 4.10 | 4834 |
| | 230 | 60 | 193.5 | 208.5 | 2 | 2 | RB4934 | RC4934 | 435000 | 980000 | 600 | 1200 | 181 | 219 | 2 | 7.44 | 4934 |
| 180 | 225 | 45 | 199 | 209.5 | 1.1 | 2 | RB4836 | RC4836 | 273000 | 695000 | 550 | 1100 | 188 | 217 | 1 | 4.30 | 4836 |
| | 250 | 69 | 205.5 | 223 | 2 | 2.5 | RB4936 | RC4936 | 550000 | 1230000 | 550 | 1100 | 191 | 239 | 2 | 11.0 | 4936 |
| 190 | 240 | 50 | 208 | 220 | 1.5 | 2 | RB4838 | RC4838 | 315000 | 785000 | 550 | 1100 | 200 | 230 | 1.5 | 5.65 | 4838 |
| | 260 | 69 | 216 | 233 | 2 | 2.5 | RB4938 | RC4938 | 565000 | 1290000 | 500 | 1000 | 201 | 249 | 2 | 11.5 | 4938 |
| 200 | 250 | 50 | 218.5 | 230.5 | 1.5 | 2 | RB4840 | RC4840 | 320000 | 825000 | 500 | 1000 | 210 | 240 | 1.5 | 5.90 | 4840 |
| | 280 | 80 | 231.5 | 251 | 2.1 | 3 | RB4940 | RC4940 | 665000 | 1500000 | 500 | 1000 | 211 | 269 | 2 | 15.7 | 4940 |
| 220 | 270 | 50 | 239.5 | 251.5 | 1.5 | 2 | RB4844 | RC4844 | 335000 | 905000 | 450 | 900 | 230 | 260 | 1.5 | 6.40 | 4844 |
| | 300 | 80 | 249 | 268 | 2.1 | 3 | RB4944 | RC4944 | 695000 | 1620000 | 450 | 900 | 231 | 289 | 2 | 17.1 | 4944 |
| 240 | 300 | 60 | 260.5 | 275 | 2 | 2 | RB4848 | RC4848 | 510000 | 1330000 | 400 | 800 | 251 | 289 | 2 | 10.2 | 4848 |
| | 320 | 80 | 271.5 | 291 | 2.1 | 3 | RB4948 | RC4948 | 725000 | 1770000 | 400 | 800 | 253 | 307 | 2 | 18.4 | 4948 |
| 260 | 320 | 60 | 283 | 297.5 | 2 | 2 | RB4852 | RC4852 | 530000 | 1450000 | 400 | 800 | 271 | 309 | 2 | 11.0 | 4852 |
| | 360 | 100 | 296 | 321 | 2.1 | 3 | RB4952 | RC4952 | 1070000 | 2570000 | 350 | 700 | 273 | 347 | 2 | 32.0 | 4952 |
| 280 | 350 | 69 | 307.5 | 325 | 2 | 2.5 | RB4856 | RC4856 | 680000 | 1860000 | 350 | 700 | 291 | 339 | 2 | 16.0 | 4856 |
| | 380 | 100 | 318 | 342.5 | 2.1 | 3 | RB4956 | RC4956 | 1110000 | 2780000 | 350 | 700 | 293 | 367 | 2 | 33.9 | 4956 |
| 300 | 380 | 80 | 329 | 348 | 2.1 | 3 | RB4860 | RC4860 | 800000 | 2160000 | 350 | 700 | 313 | 367 | 2 | 23.0 | 4860 |
| 320 | 400 | 80 | 352 | 371 | 2.1 | 3 | RB4864 | RC4864 | 830000 | 2310000 | 300 | 600 | 333 | 387 | 2 | 24.3 | 4864 |
| 340 | 420 | 80 | 368 | 389 | 2.1 | 3 | RB4868 | RC4868 | 850000 | 2430000 | 300 | 600 | 353 | 407 | 2 | 25.6 | 4868 |
| 360 | 440 | 80 | 392 | 411.5 | 2.1 | 3 | RB4872 | RC4872 | 880000 | 2580000 | 250 | 500 | 373 | 427 | 2 | 27.0 | 4872 |
| 380 | 480 | 100 | 419 | 446 | 2.1 | 3 | RB4876 | RC4876 | 1290000 | 3600000 | 250 | 500 | 393 | 467 | 2 | 45.3 | 4876 |

Note (1): Axial permissible movement for free end bearing.
Remark: The bearings must be mounted without a clearance between two separate inner rings.

# Ball Bearing Units

Ball Bearing Units offer a convenient method of applying highly reliable rolling contact bearings to applications without the necessity of manufacturing a bearing housing.

Generally Ball Bearing Units have following features.

- Self-aligning capability
- Sealed
- Easy to mount and dismount
- Interchangeability with foreign made units
- Many types suitable for applications
  Additionally NACHI Ball Bearing Units have the advantages of case of use and high reliability.
- Anti-rotation pin on outer ring
- Eccentric collar type is also available
- Base for mount locating pin
  Since Ball Bearings for units have the same geometry as deep groove ball bearings, load rating, reliability and other functions are equal with that of deep-groove ball bearings.

## 1. Designations

Number arrangement of Bearing Units and Ball bearings is shown as follows.

### (1) Bearing Unit Numbers

**C UK P 210 C CT4HR5 +H2310**

- **Accessory No.**: Adapter sleeves; Frame of take-up type
- **Supplementary symbol**: Internal clearance; For high or low temperature
- **Bearing dimension series no.**
- **Housing type symbol**: Pillow, Flange, Take-up, Cartridge and Hanger
- **Cover symbol**: C : Pressed steel or cast iron cover with seal; E : End cover of pressed steel; CE: End cover of cast iron
- **Bearing type symbol**: Cylindrical bore (With eccentric collar); Tapered bore
- **Covered housing symbol**: C: For cast iron cover

### (2) Ball Bearing Numbers

**UG 208 C3HR4 +ER**

- **Accessory symbol**: Eccentric collar ER, AR; Adapter sleeves
- **Supplementary symbol**: Internal clearance; For high or low temperature
- **Dimension series**: First number: Diameter series no.; 2nd and 3rd number: Bore diameter no.
- **Type symbol**: Set screw type: UC, B; Eccentric collar type: KH, U, UG; Adapter sleeve type: UK

Note: For type B bearings, a last digit of bore diameter number is used as dimension series number.

NACHI

## Contents of dimension tables (1)

Symbol ○: Pressed steel cover type is available. ●: Cast iron cover type is available.

| Housing type \ Ball bearing type | | UC (MUC) page 527 | UK+H page 529 | | B page 531 | KH AE page 531 | U, MU+ER page 533 | UG+ER page 535 | Ball bearing type \ Housing type |
|---|---|---|---|---|---|---|---|---|---|
| Cast Iron Series<br>Standard Pillow block Type | P | UCP ○ ●<br>page 417 | UKP ○ ●<br>page 421 | | BP<br>page 425 | – | – | UGP<br>page 427 | P |
| Cast Iron Series<br>Thick Body Pillow block for Shock Applications | IP | UCIP ○ ●<br>page 429 | UKIP ○ ●<br>page 431 | | – | – | – | – | IP |
| Cast Steel Series<br>Pillow block for Heavy Loads | PK | UCPK ●<br>page 433 | UKPK ●<br>page 425 | | – | – | – | – | PK |
| Cast Iron Series<br>Pillow block with High Center Height | PH | UCPH<br>page 437 | – | | – | – | – | – | PH |
| Cast Iron Series<br>Pillow block with Small Base | PA | UCPA<br>page 439 | – | | – | – | – | – | PA |
| Cast Iron Series<br>Pillow block for Free-end | EP | UCEP<br>page 441 | – | | – | – | – | – | EP |
| Cast Iron Series<br>Light Weight Pillow block for Light Load | LLP | – | – | | BLLP<br>page 443 | KHLLP<br>page 443 | – | – | LLP |
| Stainless Steel Series<br>Standard Pillow block | MP | MUCP<br>page 445 | – | | – | – | – | – | MP |
| Alloy Series (Silver series)<br>Compact Pillow block for Light Load | P<br>(PZ3) | – | – | | – | – | UP<br>(MUP)<br>page 447 | – | P<br>(PZ3) |
| Pressed Steel Series<br>Pillow block for Extremely Light Load | PP | – | – | | BPP<br>page 449 | KHPP<br>page 449 | – | – | PP |
| Cast Iron Series<br>Square Flange Type | F | UCF ○ ●<br>page 451 | UKF ○ ●<br>page 455 | | BF<br>page 459 | – | – | UGF<br>page 461 | F |
| Cast Iron Series<br>Square Flange with Spigot Joint | FS | UCFS ●<br>page 463 | UKFS ●<br>page 465 | | – | – | – | – | FS |
| Cast Iron Series<br>Round Flange Type | FC | UCFC ○ ●<br>page 467 | UKFC ○ ●<br>page 471 | | BFC<br>page 473 | – | – | UGFC<br>page 475 | FC |

NACHI

## Contents of dimension tables (2)

Symbol ○: Pressed steel cover type is available. ●: Cast iron cover type is available.

| Housing type \ Ball bearing type | | UC (MUC) page 527 | UK+H page 529 | | B page 531 | KH AE page 531 | U, MU+ER page 533 | UG+ER page 535 | Ball bearing type / Housing type |
|---|---|---|---|---|---|---|---|---|---|
| Cast Iron Series Rhombic Flange Type | FL | UCFL ○ ● page 477 | UKFL ○ ● page 481 | | BFL page 485 | – | – | UGFL page 487 | FL |
| Cast Iron Series Light Weight Rhombic Flange for Light Load | LFL | – | – | | BLFL page 489 | KHLFL page 489 | – | – | LFL |
| Stainless Steel Series Rhombic Flange for Anti-Corrosion | MFL | MUCFL page 491 | – | | – | – | – | – | MFL |
| Alloy Series (Silver Series) Compact Rhombic Flange for Light Load | FL (FLZ3) | – | – | | – | – | UFL (MUFL) page 493 | – | FL (FLZ3) |
| Pressed Steel Series Round Flange for Extremely Light Load | PF | – | – | | BPF page 495 | KHPF page 495 | – | – | PF |
| Pressed Steel Series Rhombic Flange for Extremely Light Load | PFL | – | – | | BPFL page 497 | KHPFL page 497 | – | – | PFL |
| Cast Iron Series Transformed Rhombic Flange, Adjustable Center | FA | UCFA page 499 | – | | – | – | – | – | FA |
| Cast Iron Series One Side Flange Type | FK | UCFK page 501 | – | | – | – | – | – | FK |
| Cast Iron Series Standard Take-Up Type | T | UCT ○ ● page 503 | UKT ○ ● page 507 | | BT page 511 | – | – | – | T |
| Cast Iron Series Take-Up Type with Frame of Angle Steel | T + WB | UCT+WB page 513 | – | | – | – | – | – | T + WB |
| Cast Iron Series Take-Up Type with Frame of Light Channel Steel | TL + WL | UCTL+WL page 515 | – | | – | – | – | – | TL + WL |
| Cast Iron Series Take-Up Type with Frame of Channel Steel | TU + WU | UCTU+WU page 517 | – | | – | – | – | – | TU + WU |
| Cast Iron Series Cartridge Type | C | UCC page 521 | UKC page 523 | | – | – | – | – | C |
| Cast Iron Series Hanger Type | ECH | UCECH page 525 | – | | – | – | – | – | ECH |

## 2. Tolerance

Tolerances for ball bearings and housings are shown as follows.

### (1) Ball Bearing Tolerances

| | |
|---|---|
| Tolerances of inner ring | Cylindrical bore: See Table 1<br>Tapered bore: See Table 5.7.1 (Page 63) 1/12 taper bore |
| Tolerances of outer ring | Tolerance class 0 of Table 5.1.2 (Page 55)<br>Note: The lower limit of $\Delta D_{mp}$ is not applied within a distance of 1/4 of outer ring width from side faces. |
| Chamfer dimensions | See Table 2 |

**Table 1. Tolerance of Inner Ring (Cylindrical bore)** Unit: μm

| Bore dia. Nominal d (mm) | | Single plane mean bore dia. deviation $\Delta d_{mp}$ | | Bore dia. variation in a single radial plane $V_{dp}$ | Deviation of a single inner ring width $\Delta B_s$ | | Radial runout of assembled bearing inner ring $K_{ia}$ (referaence) | Deviation of (1) eccentric value of inner ring eccentric face $\Delta H_s$ |
|---|---|---|---|---|---|---|---|---|
| Over | Incl. | High | Low | Max | High | Low | Max | |
| 6 | 10 | +12 | 0 | 8 | 0 | –120 | 15 | ±100 |
| 10 | 18 | +15 | 0 | 10 | 0 | –120 | 15 | ±100 |
| 18 | 31.75 | +18 | 0 | 12 | 0 | –120 | 18 | ±100 |
| 31.75 | 50.8 | +21 | 0 | 14 | 0 | –120 | 20 | ±100 |
| 50.8 | 80 | +24 | 0 | 16 | 0 | –150 | 25 | ±100 |
| 80 | 120 | +28 | 0 | 19 | 0 | –200 | 30 | – |
| 120 | 180 | +33 | 0 | 22 | 0 | –250 | 35 | – |

Note: (1) This deviation is used on the eccentric locking collar type bearings.

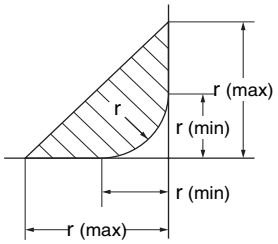


Remark: The exact shape of the chamfer is not specified, but its contour will be in the area shown with oblique lines.

**Table 2. Chamfer dimension Limits**

| Chamfer dimension Nominal r | r | | Corner of shaft R |
|---|---|---|---|
| | Max | Min | Max |
| 0.5 | 0.8 | 0.3 | 0.3 |
| 1 | 1.5 | 0.6 | 0.6 |
| 1.5 | 2 | 1 | 1 |
| 2 | 2.5 | 1.5 | 1 |
| 2.5 | 3 | 2 | 1.5 |
| 3 | 3.5 | 2.5 | 2 |
| 3.5 | 4 | 2.5 | 2 |
| 4 | 4.5 | 3 | 2.5 |
| 5 | 6 | 4 | 3 |





### (2) Bearing Unit Housing Tolerances

| | |
|---|---|
| Spherical bearing seating of cast iron housing | See Table 3 |
| Others | See NACHI Bearing Units Catalog |

**Table 3. Tolerance of cast iron housing** Unit: μm

| Spherical bearing seating diameter nominal Da (mm) | | Tolerance symbol H7 | | | Tolerance symbol J7 | | | Tolerance symbol K7 | | |
|---|---|---|---|---|---|---|---|---|---|---|
| | | Deviation of single plane mean dia. of bearing seating $\Delta D_{am}$ | | Bearing seating dia. variation in a single radial plane $VD_{ap}$ | Deviation of single plane mean dia. of bearing seating $\Delta D_{am}$ | | Bearing seating dia. variation in a single radial plane $VD_{ap}$ | Deviation of single plane mean dia. of bearing seating $\Delta D_{am}$ | | Bearing seating dia. variation in a single radial plane $VD_{ap}$ |
| Over | Incl. | High | Low | Max | High | Low | Max | High | Low | Max |
| 30 | 50 | +25 | 0 | 10 | +14 | –11 | 10 | + 7 | –18 | 10 |
| 50 | 80 | +30 | 0 | 12 | +18 | –12 | 12 | + 9 | –21 | 12 |
| 80 | 120 | +35 | 0 | 14 | +22 | –13 | 14 | +10 | –25 | 14 |
| 120 | 180 | +40 | 0 | 16 | +26 | –14 | 16 | +12 | –28 | 16 |
| 180 | 250 | +46 | 0 | 18 | +30 | –16 | 18 | +13 | –33 | 18 |
| 250 | 315 | +52 | 0 | 20 | +36 | –16 | 20 | +16 | –36 | 20 |

Notes: 1 Spherical bearing seat dimensions are divided into H7 for clearance fits and J7 and K7 for light interference fits. As NACHI bearings equipped with an anti-rotation pin to prevent outer race rotation, H7 is HACHI standard for the dimension.
2 For rotating outer ring load or fluctuating load applications, J7 or K7 fitting practice should be used.
3 Silver series of special alloy material are supplied with special tolerance.

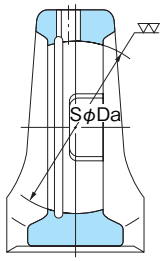


## 3. Radial clearance of Ball Bearings

| | |
|---|---|
| Cylindrical bore | See Table 6.1 (page 64); Radial internal clearance of deep-groove ball bearings (with cilindrical bore) |
| Tapered bore | CT2: CN for cylindrical bore CTN: C3 for cylindrical bore CT3: C4 for cylindrical bore<br>They are considered the inner ring expansion by fitting with an adapter sleeve. |

## 4. Shaft Tolerance

| | |
|---|---|
| For cylindrical bore bearings | ● Normal load: Shaft tolerance h7, h8 or js7<br>● Heavy or shock load: Shaft tolerance k6, k7 or m6 |
| For tapered bore bearings with an adaptor sleeve | ● Shaft tolerance h9 |

## 5. Maximum permissible misalignment angle

Normal permissible misalignment angle α is ±1.5°～2.5° because it is restricted by grease supply.
Even if grease is not supplied, it is desirable to use the same limiting value. If larger angles are needed, its angle is permissible to about ±5°.
The maximum misalignment angle of bearing units with a housing cover is ±1.0°～1.8°, beyond this angle the inner diameter of the cover will interfere the shaft.
To prevent the unequal contact between seals and shaft, excessive heat generation and dust intrusion, the misalignment angle should be minimized.

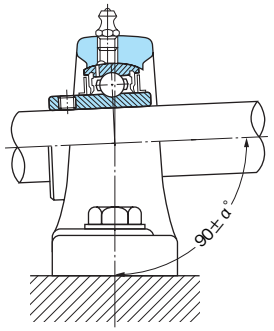


## 6. Maximum permissible operating temperature

Since Bearing units are sometimes used at higher or lower temperature than normal, NACHI prepares the special specification shown in Table 4.
In case of Bearing units with high temperature specification, the decrease in basic load rating should be considered, and radial clearance should be larger than normal clearance.
NACHI standard radial clearance for high temperature applications is C3 HR4, C4 HR5 and C4 HR23 for cylindrical bore bearings and CT3 HR4, CT4 HR23 for tapered bore bearings.
If there is a large temperature difference between the inner ring and outer ring, radial internal clearance should be determined reasonably.

Notes 1. If operating temperature exceeds 150°C, careful investigation, including radial internal clearance is required. In such case, Please consult NACHI with operating conditions.
2. The grease shown in Table 4 must be supplied for relubrication. If different greases are mixed, lubrication ability can deteriorate. Before supplying different grease, please consult NACHI or the grease manufactures.

**Table 4. Operating Temperature Range**

| Series | Seal material | Grease | Operating temperature range (°C) | Slinger color |
|---|---|---|---|---|
| Silver series | Nitrile rubber (NBR) | Alvania Grease 3 | – 10～+ 80 | — |
| Standard | Nitrile rubber (NBR) | Alvania Grease 3 | – 15～+100 | Black |
| HR4 for high temperature | Nitrile rubber (NBR) | Superlube 3 | Normal temperature～+120 | Yellow |
| HR5 for high temperature | Silicone rubber | Superlube 3 | Normal temperature～+200 | Yellow |
| HR23 for high temperature | Silicone rubber | Fluorine-contained Grease | Normal temperature～+230 | Black |
| CR2A for low temperature | Silicone rubber | Aero Shell Grease 7 | - 40～+Normal temperature | White |





## 7. Speed limit

Limiting speed of bearings is determined by the slip speed limit between the seal and inner ring or shaft.
Limiting speed of bearings is shown in the chart below. But this limiting speed should be decreased, if there are differences between shaft center and bearing center or a mixing resistance of grease for HR23 specification. When Bearing units are necessary to operate in excess of speed limit, please consult NACHI.

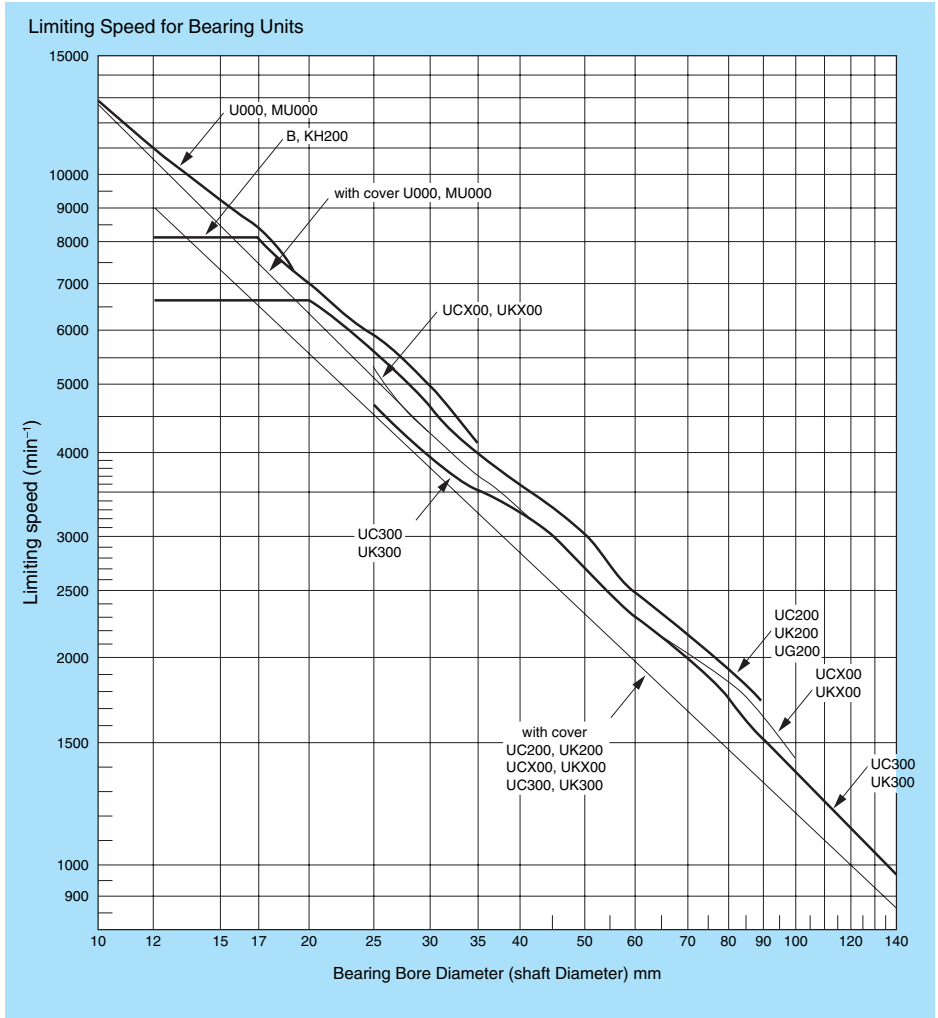

# Pillow Block Units

## UCP type

### With set screws

### Cylindrical bore

Shaft dia.: 12～60mm

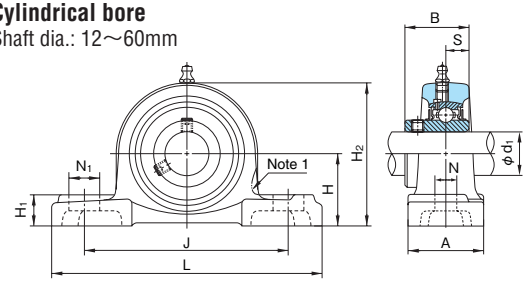


Note: The line shows figure of UCPX00 series

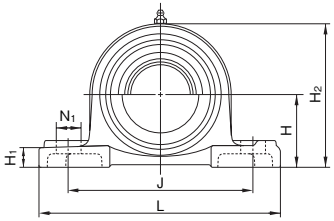


With steel covers

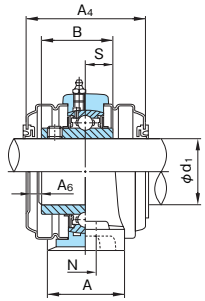


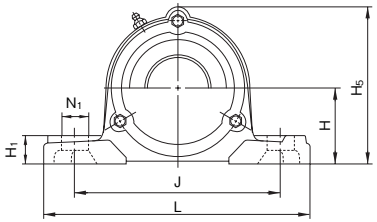


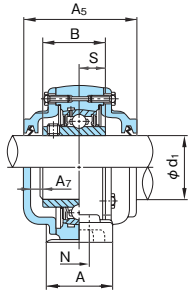


With cast covers

1N=0.102kgf

| Shaft dia. $d_1$ (mm) | Unit No. | Boundary dimensions (mm) | | | | | | | | | | | | | | | Bolt size | Bearings | | | Housing No. | Unit No. with steel covers | Unit No. with cast covers | Mass of Unit (kg) | | |
|---|---|---|---|---|---|---|---|---|---|---|---|---|---|---|---|---|---|---|---|---|---|---|---|---|---|---|
| | | H | L | A | J | N | $N_1$ | $H_1$ | $H_2$ | $H_5$ | B | S | $A_4$ | $A_5$ | $A_6$ | $A_7$ | | No. | Basic load rating (N) Cr | Basic load rating (N) Cor | | Covers with rubber seal (End cover on one side) | Covers with rubber seal (End cover on one side) | standard | with steel cover | with cast covers |
| 12 | **UCP201** | 30.2 | 127 | 38 | 95 | 13 | 19 | 15 | 62 | 66 | 31 | 12.7 | 56 | 62 | 8 | 6 | M10 | UC201 | 12800 | 6600 | P203 | **UCP201C(E)** | **CUCP201C(CE)** | 0.65 | 0.71 | 1.1 |
| 15 | **UCP202** | 30.2 | 127 | 38 | 95 | 13 | 19 | 15 | 62 | 66 | 31 | 12.7 | 56 | 62 | 8 | 6 | M10 | UC202 | 12800 | 6600 | P203 | **UCP202C(E)** | **CUCP202C(CE)** | 0.63 | 0.69 | 1.1 |
| 17 | **UCP203** | 30.2 | 127 | 38 | 95 | 13 | 19 | 15 | 62 | 66 | 31 | 12.7 | 56 | 62 | 8 | 6 | M10 | UC203 | 12800 | 6600 | P203 | **UCP203C(E)** | **CUCP203C(CE)** | 0.62 | 0.68 | 1.1 |
| 20 | **UCP204** | 33.3 | 127 | 38 | 95 | 13 | 19 | 15 | 65 | 69 | 31 | 12.7 | 56 | 62 | 8 | 6 | M10 | UC204 | 12800 | 6600 | P204 | **UCP204C(E)** | **CUCP204C(CE)** | 0.65 | 0.71 | 1.1 |
| | **UCP205** | 36.5 | 140 | 38 | 105 | 13 | 16 | 16 | 70 | 76 | 34 | 14.3 | 63 | 70 | 11 | 9 | M10 | UC205 | 14000 | 7900 | P205 | **UCP205C(E)** | **CUCP205C(CE)** | 0.79 | 0.86 | 1.4 |
| 25 | **UCPX05** | 44.4 | 159 | 51 | 119 | 17 | 25 | 18 | 85 | — | 38.1 | 15.9 | 65 | — | 9 | — | M14 | UCX05 | 19600 | 11300 | PX05 | **UCPX05C(E)** | — | 1.5 | 1.5 | — |
| | **UCP305** | 45 | 175 | 45 | 132 | 17 | 20 | 16 | 84 | 89 | 38 | 15 | — | 78 | — | 10 | M14 | UC305 | 21300 | 10900 | P305 | — | **CUCP305C(CE)** | 1.6 | — | 2.1 |
| | **UCP206** | 42.9 | 165 | 48 | 121 | 17 | 21 | 18 | 83 | 87 | 38.1 | 15.9 | 65 | 74 | 9 | 8 | M14 | UC206 | 19600 | 11300 | P206 | **UCP206C(E)** | **CUCP206C(CE)** | 1.3 | 1.4 | 2.0 |
| 30 | **UCPX06** | 47.6 | 175 | 57 | 127 | 17 | 25 | 20 | 94 | — | 42.9 | 17.5 | 70 | — | 8 | — | M14 | UCX06 | 25900 | 15400 | PX06 | **UCPX06C(E)** | — | 1.9 | 1.9 | — |
| | **UCP306** | 50 | 180 | 50 | 140 | 17 | 20 | 19 | 94 | 99 | 43 | 17 | — | 84 | — | 10 | M14 | UC306 | 26800 | 15000 | P306 | — | **CUCP306C(CE)** | 1.9 | — | 2.6 |
| | **UCP207** | 47.6 | 167 | 48 | 127 | 17 | 21 | 19 | 94 | 97 | 42.9 | 17.5 | 70 | 80 | 8 | 8 | M14 | UC207 | 25900 | 15400 | P207 | **UCP207C(E)** | **CUCP207C(CE)** | 1.6 | 1.7 | 2.5 |
| 35 | **UCPX07** | 54 | 203 | 57 | 144 | 17 | 30 | 22 | 105 | — | 49.2 | 19 | 83 | — | 10 | — | M14 | UCX07 | 29300 | 17900 | PX07 | **UCPX07C(E)** | — | 2.7 | 2.7 | — |
| | **UCP307** | 56 | 210 | 56 | 160 | 17 | 25 | 21 | 105 | 110 | 48 | 19 | — | 90 | — | 10 | M14 | UC307 | 33500 | 19200 | P307 | — | **CUCP307C(CE)** | 2.7 | — | 3.4 |
| | **UCP208** | 49.2 | 184 | 54 | 137 | 17 | 25 | 19 | 100 | 104 | 49.2 | 19 | 82 | 90 | 10 | 8 | M14 | UC208 | 29300 | 17900 | P208 | **UCP208C(E)** | **CUCP208C(CE)** | 2.0 | 2.2 | 3.0 |
| 40 | **UCPX08** | 58.7 | 222 | 67 | 156 | 20 | 32 | 26 | 113 | — | 49.2 | 19 | 82 | — | 10 | — | M16 | UCX08 | 33000 | 20500 | PX08 | **UCPX08C(E)** | — | 3.5 | 3.5 | — |
| | **UCP308** | 60 | 220 | 60 | 170 | 17 | 27 | 23 | 116 | 122 | 52 | 19 | — | 100 | — | 11 | M14 | UC308 | 40500 | 23900 | P308 | — | **CUCP308C(CE)** | 3.3 | — | 4.4 |
| | **UCP209** | 54 | 190 | 54 | 146 | 17 | 22 | 20 | 108 | 114 | 49.2 | 19 | 82 | 90 | 10 | 8 | M14 | UC209 | 33000 | 20500 | P209 | **UCP209C(E)** | **CUCP209C(CE)** | 2.3 | 2.5 | 3.4 |
| 45 | **UCPX09** | 58.7 | 222 | 67 | 156 | 20 | 33 | 26 | 116 | — | 51.6 | 19 | 87 | — | 9 | — | M16 | UCX09 | 35500 | 23200 | PX09 | **UCPX09C(E)** | — | 3.5 | 3.6 | — |
| | **UCP309** | 67 | 245 | 67 | 190 | 20 | 30 | 25 | 128 | 136 | 57 | 22 | — | 106 | — | 12 | M16 | UC309 | 51500 | 29500 | P309 | — | **CUCP309C(CE)** | 4.5 | — | 5.8 |
| | **UCP210** | 57.2 | 206 | 60 | 159 | 20 | 25 | 22 | 114 | 120 | 51.6 | 19 | 87 | 98 | 9 | 10 | M16 | UC210 | 35500 | 23200 | P210 | **UCP210C(E)** | **CUCP210C(CE)** | 2.7 | 3.0 | 4.1 |
| 50 | **UCPX10** | 63.5 | 241 | 73 | 171 | 20 | 36 | 27 | 126 | — | 55.6 | 22.2 | 88 | — | 9 | — | M16 | UCX10 | 43000 | 29400 | PX10 | **UCPX10C(E)** | — | 4.2 | 4.5 | — |
| | **UCP310** | 75 | 275 | 75 | 212 | 20 | 35 | 28 | 143 | 149 | 61 | 22 | — | 114 | — | 12 | M16 | UC310 | 61500 | 38200 | P310 | — | **CUCP310C(CE)** | 6.2 | — | 7.6 |
| | **UCP211** | 63.5 | 219 | 60 | 171 | 20 | 25 | 22 | 126 | 133 | 55.6 | 22.2 | 88 | 100 | 9 | 10 | M16 | UC211 | 43000 | 29400 | P211 | **UCP211C(E)** | **CUCP211C(CE)** | 3.3 | 3.7 | 5.0 |
| 55 | **UCPX11** | 69.8 | 260 | 79 | 184 | 25 | 36 | 30 | 139 | — | 65.1 | 25.4 | 100 | — | 9 | — | M20 | UCX11 | 52500 | 36100 | PX11 | **UCPX11C(E)** | — | 5.9 | 6.2 | — |
| | **UCP311** | 80 | 310 | 80 | 236 | 20 | 38 | 31 | 154 | 159 | 66 | 25 | — | 120 | — | 13 | M16 | UC311 | 71500 | 44800 | P311 | — | **CUCP311C(CE)** | 7.7 | — | 9.6 |
| | **UCP212** | 69.8 | 241 | 70 | 184 | 20 | 25 | 25 | 138 | 145 | 65.1 | 25.4 | 102 | 114 | 10 | 11 | M16 | UC212 | 52500 | 36100 | P212 | **UCP212C(E)** | **CUCP212C(CE)** | 4.7 | 5.1 | 6.7 |
| 60 | **UCPX12** | 76.2 | 286 | 83 | 203 | 25 | 41 | 32 | 151 | — | 65.1 | 25.4 | 104 | — | 11 | — | M20 | UCX12 | 57500 | 40000 | PX12 | **UCPX12C(E)** | — | 7.2 | 7.4 | — |
| | **UCP312** | 85 | 330 | 85 | 250 | 25 | 38 | 33 | 165 | 169 | 71 | 26 | — | 130 | — | 14 | M20 | UC312 | 81500 | 52000 | P312 | — | **CUCP312C(CE)** | 9.3 | — | 11.0 |

Remarks: 1. Grease nipple: 1/4-28UNF

Remarks: 2. Examples of unit numbers with covers:

With steel cover { Covers with rubber seal on both sides :UCP210C
An end cover and a cover with rubber seal :UCP210E

With cast covers { Covers with rubber seal on both sides :CUCP210C
An end cover and a cover with rubber seal :CUCP210CE

# Pillow Block Units

## UCP type

### With set screws

### Cylindrical bore

Shaft dia.: 65～140mm

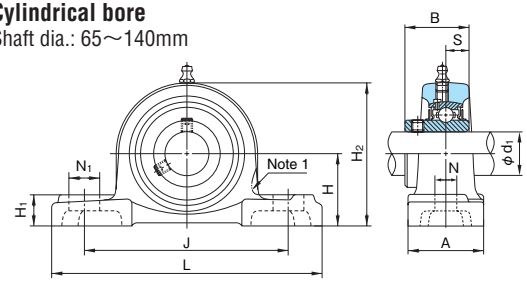


Note: The line shows figure of UCPX00 series

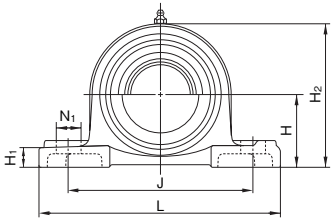


With steel covers

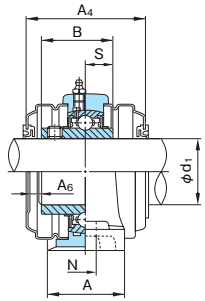


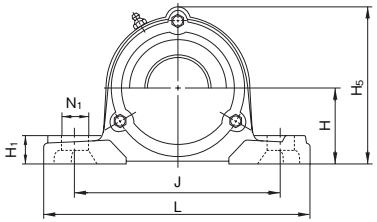


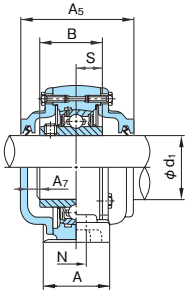


With cast covers

1N=0.102kgf

| Shaft dia. $d_1$ (mm) | Unit No. | Boundary dimensions (mm) | | | | | | | | | | | | | | | Bolt size | Bearings | | | Housing No. | Unit No. with steel covers | Unit No. with cast covers | Mass of Unit (kg) | | |
|---|---|---|---|---|---|---|---|---|---|---|---|---|---|---|---|---|---|---|---|---|---|---|---|---|---|---|
| | | H | L | A | J | N | $N_1$ | $H_1$ | $H_2$ | $H_5$ | B | S | $A_4$ | $A_5$ | $A_6$ | $A_7$ | | No. | Basic load rating (N) Cr | Basic load rating (N) Cor | | Covers with rubber seal (End cover on one side) | Covers with rubber seal (End cover on one side) | standard | With steel cover | With cast covers |
| 65 | **UCP213** | 76.2 | 265 | 70 | 203 | 25 | 29 | 27 | 150 | 156 | 65.1 | 25.4 | 102 | 118 | 10 | 13 | M20 | UC213 | 57500 | 40000 | P213 | **UCP213C(E)** | **CUCP213C(CE)** | 5.6 | 6.1 | 7.8 |
| | **UCPX13** | 76.2 | 286 | 83 | 203 | 25 | 41 | 32 | 154 | — | 74.6 | 30.2 | — | — | — | — | M20 | UCX13 | 62000 | 44000 | PX13 | — | — | 7.4 | — | — |
| | **UCP313** | 90 | 340 | 90 | 260 | 25 | 38 | 36 | 174 | 188 | 75 | 30 | — | 140 | — | 17 | M20 | UC313 | 92500 | 59700 | P313 | — | **CUCP313C(CE)** | 9.8 | — | 14.3 |
| 70 | **UCP214** | 79.4 | 266 | 72 | 210 | 25 | 31 | 27 | 156 | 162 | 74.6 | 30.2 | — | 134 | — | 16 | M20 | UC214 | 62000 | 44000 | P214 | — | **CUCP214C(CE)** | 7.3 | — | 9.3 |
| | **UCPX14** | 88.9 | 330 | 89 | 229 | 27 | 51 | 35 | 172 | — | 77.8 | 33.3 | — | — | — | — | M22 | UCX14 | 66000 | 48200 | PX14 | — | — | 11.1 | — | — |
| | **UCP314** | 95 | 360 | 90 | 280 | 27 | 40 | 40 | 186 | 198 | 78 | 33 | — | 140 | — | 17 | M22 | UC314 | 104000 | 68000 | P314 | — | **CUCP314C(CE)** | 11.4 | — | 16.7 |
| 75 | **UCP215** | 82.6 | 275 | 74 | 217 | 25 | 31 | 28 | 163 | 167 | 77.8 | 33.3 | — | 136 | — | 17 | M20 | UC215 | 66000 | 48200 | P215 | — | **CUCP215C(CE)** | 7.9 | — | 9.6 |
| | **UCPX15** | 88.9 | 330 | 89 | 229 | 27 | 51 | 35 | 177 | — | 82.6 | 33.3 | — | — | — | — | M22 | UCX15 | 72500 | 53000 | PX15 | — | — | 11.4 | — | — |
| | **UCP315** | 100 | 380 | 100 | 290 | 27 | 40 | 40 | 197 | 208 | 82 | 32 | — | 150 | — | 17 | M22 | UC315 | 114000 | 76900 | P315 | — | **CUCP315C(CE)** | 13.6 | — | 19.6 |
| 80 | **UCP216** | 88.9 | 292 | 78 | 232 | 25 | 31 | 30 | 175 | 188 | 82.6 | 33.3 | — | 146 | — | 15 | M20 | UC216 | 72500 | 53000 | P216 | — | **CUCP216C(CE)** | 10.0 | — | 12.2 |
| | **UCPX16** | 101.6 | 381 | 102 | 283 | 27 | 59 | 42 | 197 | — | 85.7 | 34.1 | — | — | — | — | M22 | UCX16 | 83500 | 61800 | PX16 | — | — | 17.4 | — | — |
| | **UCP316** | 106 | 400 | 110 | 300 | 27 | 40 | 45 | 209 | 219 | 86 | 34 | — | 154 | — | 17 | M22 | UC316 | 123000 | 86400 | P316 | — | **CUCP316C(CE)** | 16.4 | — | 23.5 |
| 85 | **UCP217** | 95.2 | 310 | 83 | 247 | 25 | 31 | 32 | 187 | 199 | 85.7 | 34.1 | — | 150 | — | 15 | M20 | UC217 | 83500 | 61800 | P217 | — | **CUCP217C(CE)** | 12.2 | — | 14.2 |
| | **UCPX17** | 101.6 | 381 | 102 | 283 | 27 | 59 | 42 | 202 | — | 96 | 39.7 | — | — | — | — | M22 | UCX17 | 95500 | 71400 | PX17 | — | — | 17.1 | — | — |
| | **UCP317** | 112 | 420 | 110 | 320 | 33 | 45 | 45 | 221 | 234 | 96 | 40 | — | 164 | — | 18 | M27 | UC317 | 132000 | 96500 | P317 | — | **CUCP317C(CE)** | 18.6 | — | 27.0 |
| 90 | **UCP218** | 101.6 | 327 | 88 | 262 | 27 | 33 | 34 | 200 | 211 | 96 | 39.7 | — | 164 | — | 17 | M22 | UC218 | 95500 | 71400 | P218 | — | **CUCP218C(CE)** | 14.7 | — | 18.2 |
| | **UCPX18** | 101.6 | 381 | 111 | 283 | 27 | 60 | 45 | 206 | — | 104 | 42.9 | — | — | — | — | M22 | UCX18 | 109000 | 81600 | PX18 | — | — | 17.0 | — | — |
| | **UCP318** | 118 | 430 | 110 | 330 | 33 | 45 | 50 | 233 | 245 | 96 | 40 | — | 168 | — | 20 | M27 | UC318 | 143000 | 107200 | P318 | — | **CUCP318C(CE)** | 20.9 | — | 30.4 |
| 95 | **UCP319** | 125 | 470 | 120 | 360 | 36 | 50 | 50 | 250 | 257 | 103 | 41 | — | 180 | — | 20 | M30 | UC319 | 153000 | 118400 | P319 | — | **CUCP319C(CE)** | 26.5 | — | 36.8 |
| 100 | **UCPX20** | 127 | 432 | 121 | 337 | 33 | 64 | 52 | 250 | — | 117.5 | 49.2 | — | — | — | — | M27 | UCX20 | 134000 | 104700 | PX20 | — | — | 33.0 | — | — |
| | **UCP320** | 140 | 490 | 120 | 380 | 36 | 50 | 55 | 275 | 282 | 108 | 42 | — | 190 | — | 21 | M30 | UC320 | 173000 | 140400 | P320 | — | **CUCP320C(CE)** | 34.3 | — | 44.9 |
| 105 | **UCP321** | 140 | 490 | 120 | 380 | 36 | 50 | 55 | 278 | 287 | 112 | 44 | — | 194 | — | 21 | M30 | UC321 | 183000 | 153100 | P321 | — | **CUCP321C(CE)** | 36.6 | — | 45.2 |
| 110 | **UCP322** | 150 | 520 | 140 | 400 | 40 | 55 | 60 | 295 | 305 | 117 | 46 | — | 210 | — | 26 | M33 | UC322 | 205000 | 178800 | P322 | — | **CUCP322C(CE)** | 42.5 | — | 54.7 |
| 120 | **UCP324** | 160 | 570 | 140 | 450 | 40 | 55 | 70 | 321 | 328 | 126 | 51 | — | 220 | — | 25 | M33 | UC324 | 207000 | 184800 | P324 | — | **CUCP324C(CE)** | 53.5 | — | 73.8 |
| 130 | **UCP326** | 180 | 600 | 140 | 480 | 40 | 55 | 80 | 354 | 358 | 135 | 54 | — | 230 | — | 24 | M33 | UC326 | 229000 | 214300 | P326 | — | **CUCP326C(CE)** | 72.1 | — | 92.2 |
| 140 | **UCP328** | 200 | 620 | 140 | 500 | 40 | 55 | 80 | 388 | 388 | 145 | 59 | — | 240 | — | 24 | M33 | UC328 | 255000 | 246000 | P328 | — | **CUCP328C(CE)** | 89.1 | — | 110 |

Remarks: 1. Grease nipple: 1/4-28UNF for bore number 13
PF1/8 for bore number 14 and over

Remarks: 2. Examples of unit numbers with covers:
With steel cover { Covers with rubber seal on both sides :UCP213C
An end cover and a cover with rubber seal :UCP213E
With cast covers { Covers with rubber seal on both sides :CUCP213C
An end cover and a cover with rubber seal :CUCP213CE

# Pillow Block Units

## UKP+H type

### With adapter assembly

### Tapered bore

Shaft dia.: 20～60mm

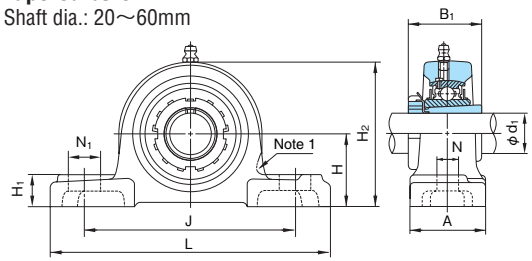


Note: The line shows figure of UCPX00 series

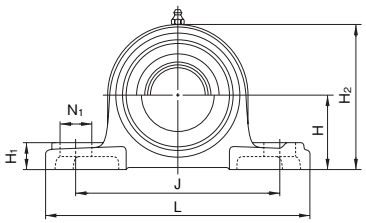


With steel cover

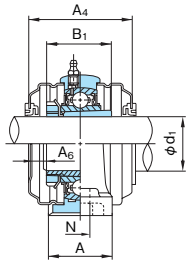


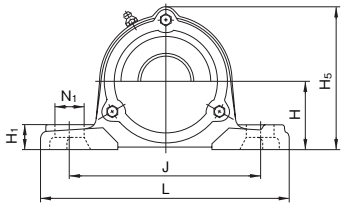


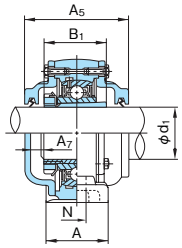


With cast covers

1N=0.102kgf

| Shaft dia. $d_1$ (mm) | Unit No. | Boundary dimensions (mm) | | | | | | | | | | | | | | Bolt size | Bearings | | | | Housing No. | Unit No. with steel covers | Unit No. with cast covers | Mass of Unit (kg) | | |
|---|---|---|---|---|---|---|---|---|---|---|---|---|---|---|---|---|---|---|---|---|---|---|---|---|---|---|
| | | H | L | A | J | N | $N_1$ | $H_1$ | $H_2$ | $H_5$ | $B_1$ | $A_4$ | $A_5$ | $A_6$ | $A_7$ | | No. | Basic load rating (N) Cr | Basic load rating (N) Cor | | | Covers with rubber seal (End cover on one side) | Covers with rubber seal (End cover on one side) | standard | with steel cover | with cast covers |
| 20 | **UKP205+H2305** | 36.5 | 140 | 38 | 105 | 13 | 16 | 16 | 70 | 76 | 35 | 63 | 70 | 11 | 9 | M10 | UK205+H2305 | 14000 | 7900 | P205 | **UKP205C(E)+H2305** | **CUKP205C(CE)+H2305** | 0.84 | 0.91 | 1.4 |
| | **UKPX05+H2305** | 44.4 | 159 | 51 | 119 | 17 | 25 | 18 | 85 | — | 35 | 65 | — | 10 | — | M14 | UKX05+H2305 | 19600 | 11300 | PX05 | **UKPX05C(E)+H2305** | — | 1.5 | 1.5 | — |
| | **UKP305+H2305** | 45 | 175 | 45 | 132 | 17 | 20 | 16 | 84 | 89 | 35 | — | 78 | — | 12 | M14 | UK305+H2305 | 21300 | 10900 | P305 | — | **CUKP305C(CE)+H2305** | 1.6 | — | 2.1 |
| 25 | **UKP206+H2306** | 42.9 | 165 | 48 | 121 | 17 | 21 | 18 | 83 | 87 | 38 | 65 | 74 | 10 | 10 | M14 | UK206+H2306 | 19600 | 11300 | P206 | **UKP206C(E)+H2306** | **CUKP206C(CE)+H2306** | 1.4 | 1.5 | 2.1 |
| | **UKPX06+H2306** | 47.6 | 175 | 57 | 127 | 17 | 25 | 20 | 94 | — | 38 | 70 | — | 12 | — | M14 | UKX06+H2306 | 25900 | 15400 | PX06 | **UKPX06C(E)+H2306** | — | 2.0 | 2.0 | — |
| | **UKP306+H2306** | 50 | 180 | 50 | 140 | 17 | 20 | 19 | 94 | 99 | 38 | — | 84 | — | 13 | M14 | UK306+H2306 | 26800 | 15000 | P306 | — | **CUKP306C(CE)+H2306** | 1.9 | — | 2.6 |
| 30 | **UKP207+H2307** | 47.6 | 167 | 48 | 127 | 17 | 21 | 19 | 94 | 97 | 43 | 70 | 80 | 11 | 11 | M14 | UK207+H2307 | 25900 | 15400 | P207 | **UKP207C(E)+H2307** | **CUKP207C(CE)+H2307** | 1.6 | 1.8 | 2.6 |
| | **UKPX07+H2307** | 54 | 203 | 57 | 144 | 17 | 30 | 22 | 105 | — | 43 | 83 | — | 17 | — | M14 | UKX07+H2307 | 29300 | 17900 | PX07 | **UKPX07C(E)+H2307** | — | 2.7 | 2.7 | — |
| | **UKP307+H2307** | 56 | 210 | 56 | 160 | 17 | 25 | 21 | 105 | 110 | 43 | — | 90 | — | 14 | M14 | UK307+H2307 | 33500 | 19200 | P307 | — | **CUKP307C(CE)+H2307** | 2.7 | — | 3.5 |
| 35 | **UKP208+H2308** | 49.2 | 184 | 54 | 137 | 17 | 25 | 19 | 100 | 104 | 46 | 82 | 90 | 15 | 14 | M14 | UK208+H2308 | 29300 | 17900 | P208 | **UKP208C(E)+H2308** | **CUKP208C(CE)+H2308** | 2.1 | 2.3 | 3.1 |
| | **UKPX08+H2308** | 58.7 | 222 | 67 | 156 | 20 | 32 | 26 | 113 | — | 46 | 82 | — | 15 | — | M16 | UKX08+H2308 | 33000 | 20500 | PX08 | **UKPX08C(E)+H2308** | — | 3.5 | 3.5 | — |
| | **UKP308+H2308** | 60 | 220 | 60 | 170 | 17 | 27 | 23 | 116 | 122 | 46 | — | 100 | — | 17 | M14 | UK308+H2308 | 40500 | 23900 | P308 | — | **CUKP308C(CE)+H2308** | 3.0 | — | 4.4 |
| 40 | **UKP209+H2309** | 54 | 190 | 54 | 146 | 17 | 22 | 20 | 108 | 114 | 50 | 82 | 90 | 14 | 13 | M14 | UK209+H2309 | 33000 | 20500 | P209 | **UKP209C(E)+H2309** | **CUKP209C(CE)+H2309** | 2.4 | 2.6 | 3.5 |
| | **UKPX09+H2309** | 58.7 | 222 | 67 | 156 | 20 | 33 | 26 | 116 | — | 50 | 87 | — | 16 | — | M16 | UKX09+H2309 | 35500 | 23200 | PX09 | **UKPX09C(E)+H2309** | — | 3.5 | 3.6 | — |
| | **UKP309+H2309** | 67 | 245 | 67 | 190 | 20 | 30 | 25 | 128 | 136 | 50 | — | 106 | — | 17 | M16 | UK309+H2309 | 51500 | 29500 | P309 | — | **CUKP309C(CE)+H2309** | 4.6 | — | 5.9 |
| 45 | **UKP210+H2310** | 57.2 | 206 | 60 | 159 | 20 | 25 | 22 | 114 | 120 | 55 | 87 | 98 | 15 | 15 | M16 | UK210+H2310 | 35500 | 23200 | P210 | **UKP210C(E)+H2310** | **CUKP210C(CE)+H2310** | 2.8 | 3.2 | 4.2 |
| | **UKPX10+H2310** | 63.5 | 241 | 73 | 171 | 20 | 36 | 27 | 126 | — | 55 | 88 | — | 14 | — | M16 | UKX10+H2310 | 43000 | 29400 | PX10 | **UKPX10C(E)+H2310** | — | 4.3 | 4.5 | — |
| | **UKP310+H2310** | 75 | 275 | 75 | 212 | 20 | 35 | 28 | 143 | 149 | 55 | — | 114 | — | 19 | M16 | UK310+H2310 | 61500 | 38200 | P310 | — | **CUKP310C(CE)+H2310** | 6.2 | — | 7.8 |
| 50 | **UKP211+H2311** | 63.5 | 219 | 60 | 171 | 20 | 25 | 22 | 126 | 133 | 59 | 88 | 100 | 14 | 15 | M16 | UK211+H2311 | 43000 | 29400 | P211 | **UKP211C(E)+H2311** | **CUKP211C(CE)+H2311** | 3.4 | 3.8 | 5.1 |
| | **UKPX11+H2311** | 69.8 | 260 | 79 | 184 | 25 | 36 | 30 | 139 | — | 59 | 100 | — | 19 | — | M20 | UKX11+H2311 | 52500 | 36100 | PX11 | **UKPX11C(E)+H2311** | — | 5.8 | 6.0 | — |
| | **UKP311+H2311** | 80 | 310 | 80 | 236 | 20 | 38 | 31 | 154 | 159 | 59 | — | 120 | — | 20 | M16 | UK311+H2311 | 71500 | 44800 | P311 | — | **CUKP311C(CE)+H2311** | 7.6 | — | 9.6 |
| 55 | **UKP212+H2312** | 69.8 | 241 | 70 | 184 | 20 | 25 | 25 | 138 | 145 | 62 | 102 | 114 | 19 | 20 | M16 | UK212+H2312 | 52500 | 36100 | P212 | **UKP212C(E)+H2312** | **CUKP212C(CE)+H2312** | 4.8 | 5.2 | 6.8 |
| | **UKPX12+H2312** | 76.2 | 286 | 83 | 203 | 25 | 41 | 32 | 151 | — | 62 | 104 | — | 19 | — | M20 | UKX12+H2312 | 57500 | 40000 | PX12 | **UKPX12C(E)+H2312** | — | 7.1 | 7.3 | — |
| | **UKP312+H2312** | 85 | 330 | 85 | 250 | 25 | 38 | 33 | 165 | 169 | 62 | — | 130 | — | 23 | M20 | UK312+H2312 | 81500 | 52000 | P312 | — | **CUKP312C(CE)+H2312** | 9.3 | — | 11.7 |
| 60 | **UKP213+H2313** | 76.2 | 265 | 70 | 203 | 25 | 29 | 27 | 150 | 156 | 65 | 102 | 118 | 17 | 20 | M20 | UK213+H2313 | 57500 | 40000 | P213 | **UKP213C(E)+H2313** | **CUKP213C(CE)+H2313** | 5.7 | 6.2 | 7.9 |
| | **UKPX13+H2313** | 76.2 | 286 | 83 | 203 | 25 | 41 | 32 | 154 | — | 65 | — | — | — | — | M20 | UKX13+H2313 | 62000 | 44000 | PX13 | — | — | 7.2 | — | — |
| | **UKP313+H2313** | 90 | 340 | 90 | 260 | 25 | 38 | 36 | 174 | 188 | 65 | — | 140 | — | 24 | M20 | UK313+H2313 | 92500 | 59700 | P313 | — | **CUKP313C(CE)+H2313** | 9.8 | — | 14.2 |

Remarks: 1. Grease nipple: 1/4-28UNF

Remarks: 2. Examples of unit numbers with covers:

With steel cover { Covers with rubber seal on both sides :UKP210C+H2310
An end cover and a cover with rubber seal :UKP210E+H2310

With cast covers { Covers with rubber seal on both sides :CUKP210C+H2310
An end cover and a cover with rubber seal :CUKP210CE+H2310

# Pillow Block Units

## UKP+H type

### With adapter assembly

### Tapered bore

Shaft dia.: 65～125mm

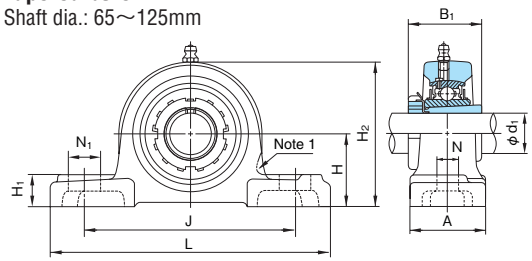


Note: The line shows figure of UCPX00 series

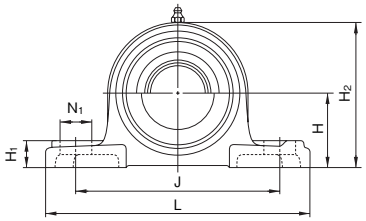


With steel cover

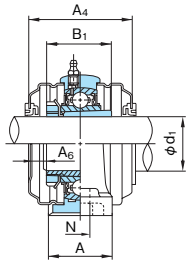


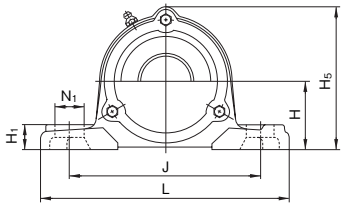


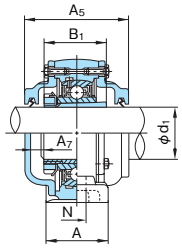


With cast covers

1N=0.102kgf

| Shaft dia. $d_1$ (mm) | Unit No. | Boundary dimensions (mm) | | | | | | | | | | | | | | Bolt size | Bearings | | | Housing No. | Unit No. with steel covers | Unit No. with cast covers | Mass of Unit (kg) | | |
|---|---|---|---|---|---|---|---|---|---|---|---|---|---|---|---|---|---|---|---|---|---|---|---|---|---|
| | | H | L | A | J | N | $N_1$ | $H_1$ | $H_2$ | $H_5$ | $B_1$ | $A_4$ | $A_5$ | $A_6$ | $A_7$ | | No. | Basic load rating (N) Cr | Basic load rating (N) Cor | | Covers with rubber seal (End cover on one side) | Covers with rubber seal (End cover on one side) | standard | with steel cover | with cast covers |
| 65 | **UKP215+H2315** | 82.6 | 275 | 74 | 217 | 25 | 31 | 28 | 163 | 167 | 73 | — | 136 | — | 26 | M20 | UK215+H2315 | 66000 | 48200 | P215 | — | **CUKP215C(CE)+H2315** | 8.3 | — | 10.0 |
| | **UKPX15+H2315** | 88.9 | 330 | 89 | 229 | 27 | 51 | 35 | 177 | — | 73 | — | — | — | — | M22 | UKX15+H2315 | 72500 | 53000 | PX15 | — | — | 11.5 | — | — |
| | **UKP315+H2315** | 100 | 380 | 100 | 290 | 27 | 40 | 40 | 197 | 208 | 73 | — | 150 | — | 25 | M22 | UK315+H2315 | 114000 | 76900 | P315 | — | **CUKP315C(CE)+H2315** | 13.7 | — | 19.9 |
| 70 | **UKP216+H2316** | 88.9 | 292 | 78 | 232 | 25 | 31 | 30 | 175 | 188 | 78 | — | 146 | — | 26 | M20 | UK216+H2316 | 72500 | 53000 | P216 | — | **CUKP216C(CE)+H2316** | 10.4 | — | 12.7 |
| | **UKPX16+H2316** | 101.6 | 381 | 102 | 283 | 27 | 59 | 42 | 197 | — | 78 | — | — | — | — | M22 | UKX16+H2316 | 83500 | 61800 | PX16 | — | — | 17.4 | — | — |
| | **UKP316+H2316** | 106 | 400 | 110 | 300 | 27 | 40 | 45 | 209 | 219 | 78 | — | 154 | — | 23 | M22 | UK316+H2316 | 123000 | 86400 | P316 | — | **CUKP316C(CE)+H2316** | 16.6 | — | 23.9 |
| 75 | **UKP217+H2317** | 95.2 | 310 | 83 | 247 | 25 | 31 | 32 | 187 | 199 | 82 | — | 150 | — | 26 | M20 | UK217+H2317 | 83500 | 61800 | P217 | — | **CUKP217C(CE)+H2317** | 12.8 | — | 14.8 |
| | **UKPX17+H2317** | 101.6 | 381 | 102 | 283 | 27 | 59 | 42 | 202 | — | 82 | — | — | — | — | M22 | UKX17+H2317 | 95500 | 71400 | PX17 | — | — | 17.0 | — | — |
| | **UKP317+H2317** | 112 | 420 | 110 | 320 | 33 | 45 | 45 | 221 | 234 | 82 | — | 164 | — | 26 | M27 | UK317+H2317 | 132000 | 96500 | P317 | — | **CUKP317C(CE)+H2317** | 18.6 | — | 27.1 |
| 80 | **UKP218+H2318** | 101.6 | 327 | 88 | 262 | 27 | 33 | 34 | 200 | 211 | 86 | — | 164 | — | 31 | M22 | UK218+H2318 | 95500 | 71400 | P218 | — | **CUKP218C(CE)+H2318** | 15.1 | — | 18.6 |
| | **UKPX18+H2318** | 101.6 | 381 | 111 | 283 | 27 | 60 | 45 | 206 | — | 86 | — | — | — | — | M22 | UKX18+H2318 | 109000 | 81600 | PX18 | — | — | 16.7 | — | — |
| | **UKP318+H2318** | 118 | 430 | 110 | 330 | 33 | 45 | 50 | 233 | 245 | 86 | — | 168 | — | 26 | M27 | UK318+H2318 | 143000 | 107200 | P318 | — | **CUKP318C(CE)+H2318** | 21.1 | — | 30.9 |
| 85 | **UKP319+H2319** | 125 | 470 | 120 | 360 | 36 | 50 | 50 | 250 | 257 | 90 | — | 180 | — | 30 | M30 | UK319+H2319 | 153000 | 118400 | P319 | — | **CUKP319C(CE)+H2319** | 26.5 | — | 37.1 |
| 90 | **UKPX20+H2320** | 127 | 432 | 121 | 337 | 33 | 64 | 52 | 250 | — | 97 | — | — | — | — | M27 | UKX20+H2320 | 134000 | 104700 | PX20 | — | — | 32.1 | — | — |
| | **UKP320+H2320** | 140 | 490 | 120 | 380 | 36 | 50 | 55 | 275 | 282 | 97 | — | 190 | — | 31 | M30 | UK320+H2320 | 173000 | 140400 | P320 | — | **CUKP320C(CE)+H2320** | 34.3 | — | 45.2 |
| 100 | **UKP322+H2322** | 150 | 520 | 140 | 400 | 40 | 55 | 60 | 295 | 305 | 105 | — | 210 | — | 36 | M33 | UK322+H2322 | 205000 | 178800 | P322 | — | **CUKP322C(CE)+H2322** | 42.6 | — | 55.1 |
| 110 | **UKP324+H2324** | 160 | 570 | 140 | 450 | 40 | 55 | 70 | 321 | 328 | 112 | — | 220 | — | 35 | M33 | UK324+H2324 | 207000 | 184800 | P324 | — | **CUKP324C(CE)+H2324** | 53.0 | — | 73.8 |
| 115 | **UKP326+H2326** | 180 | 600 | 140 | 480 | 40 | 55 | 80 | 354 | 358 | 121 | — | 230 | — | 36 | M33 | UK326+H2326 | 229000 | 214300 | P326 | — | **CUKP326C(CE)+H2326** | 72.4 | — | 93.3 |
| 125 | **UKP328+H2328** | 200 | 620 | 140 | 500 | 40 | 55 | 80 | 388 | 388 | 131 | — | 240 | — | 37 | M33 | UK328+H2328 | 255000 | 246000 | P328 | — | **CUKP328C(CE)+H2328** | 89.4 | — | 111 |

Remarks: 1. Grease nipple: PF1/8

Remarks: 2. Examples of unit numbers with covers:

With cast covers { Covers with rubber seal on both sides :CUKP215C+H2315
An end cover and a cover with rubber seal :CUKP215CE+H2315

NACHI

# Pillow Block Units

## BP type

### With set screws

### Cylindrical bore

Shaft dia.: 20～35mm

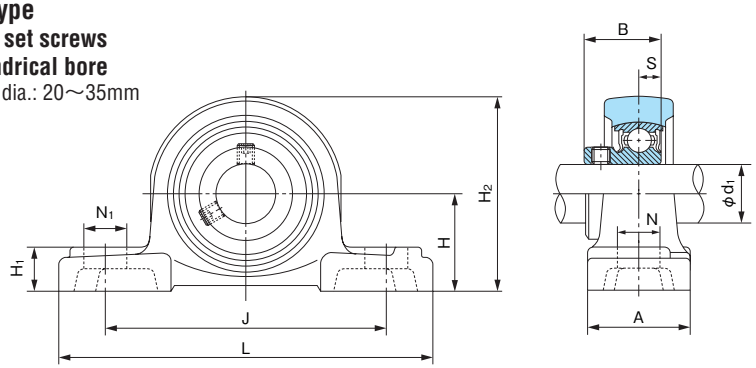


1N=0.102kgf

| Shaft dia. $d_1$ (mm) | Unit No. | Boundary dimensions (mm) | | | | | | | | | | Bolt size | | Bearings | | | Housing No. | Mass of Unit (kg) |
|---|---|---|---|---|---|---|---|---|---|---|---|---|---|---|---|---|---|---|
| | | H | L | A | J | N | $N_1$ | $H_1$ | $H_2$ | B | S | | | No. | Basic load rating (N) Cr | Basic load rating (N) Cor | | |
| **20** | **BP204** | 33.3 | 127 | 38 | 95 | 13 | 19 | 15 | 65 | 24.7 | 7 | M10 | | B4 | 12800 | 6600 | P204 G00 | 0.61 |
| **25** | **BP205** | 36.5 | 140 | 38 | 105 | 13 | 16 | 16 | 70 | 27 | 7.5 | M10 | | B5 | 14000 | 7900 | P205 G00 | 0.76 |
| **30** | **BP206** | 42.9 | 165 | 48 | 121 | 17 | 21 | 18 | 83 | 30.3 | 8 | M14 | | B6 | 19600 | 11300 | P206 G00 | 1.2 |
| **35** | **BP207** | 47.6 | 167 | 48 | 127 | 17 | 21 | 19 | 94 | 32.9 | 8.5 | M14 | | B7 | 25900 | 15400 | P207 G00 | 1.6 |

NACHI

# Pillow Block Units

## UGP type

### With eccentric collar

### Cylindrical bore

Shaft dia.: 20～60mm

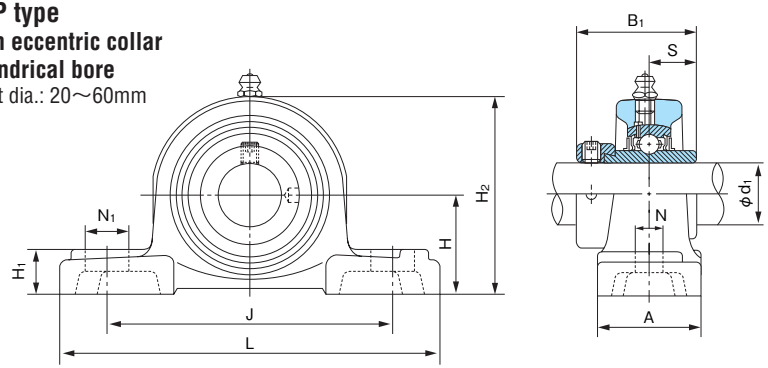


1N=0.102kgf

| Shaft dia. $d_1$ (mm) | Unit No. | Boundary dimensions (mm) | | | | | | | | | | Bolt size | | Bearings | | | Housing No. | Mass of Unit (kg) |
|---|---|---|---|---|---|---|---|---|---|---|---|---|---|---|---|---|---|---|
| | | H | L | A | J | N | $N_1$ | $H_1$ | $H_2$ | $B_1$ | S | | | No. | Basic load rating (N) Cr | Basic load rating (N) Cor | | |
| **20** | **UGP204** | 33.3 | 127 | 38 | 95 | 13 | 19 | 15 | 65 | 43.7 | 17.1 | M10 | | UG204+ER | 12800 | 6600 | P204 | 0.70 |
| **25** | **UGP205** | 36.5 | 140 | 38 | 105 | 13 | 16 | 16 | 70 | 44.4 | 17.5 | M10 | | UG205+ER | 14000 | 7900 | P205 | 0.83 |
| **30** | **UGP206** | 42.9 | 165 | 48 | 121 | 17 | 21 | 18 | 83 | 48.4 | 18.3 | M14 | | UG206+ER | 19600 | 11300 | P206 | 1.3 |
| **35** | **UGP207** | 47.6 | 167 | 48 | 127 | 17 | 21 | 19 | 94 | 51.1 | 18.8 | M14 | | UG207+ER | 25900 | 15400 | P207 | 1.7 |
| **40** | **UGP208** | 49.2 | 184 | 54 | 137 | 17 | 25 | 19 | 100 | 56.3 | 21.4 | M14 | | UG208+ER | 29300 | 17900 | P208 | 2.1 |
| **45** | **UGP209** | 54 | 190 | 54 | 146 | 17 | 22 | 20 | 108 | 56.3 | 21.4 | M14 | | UG209+ER | 33000 | 20500 | P209 | 2.3 |
| **50** | **UGP210** | 57.2 | 206 | 60 | 159 | 20 | 25 | 22 | 114 | 62.7 | 24.6 | M16 | | UG210+ER | 35500 | 23200 | P210 | 2.7 |
| **55** | **UGP211** | 63.5 | 219 | 60 | 171 | 20 | 25 | 22 | 126 | 71.4 | 27.8 | M16 | | UG211+ER | 43000 | 29400 | P211 | 3.5 |
| **60** | **UGP212** | 69.8 | 241 | 70 | 184 | 20 | 25 | 25 | 138 | 77.8 | 31 | M16 | | UG212+ER | 52500 | 36100 | P212 | 5.0 |

Remark: Grease nipple: 1/4-28UNF

# Pillow Block Units

## UCIP type

### With set screws

### Cylindrical bore

Shaft dia.: 40～140mm

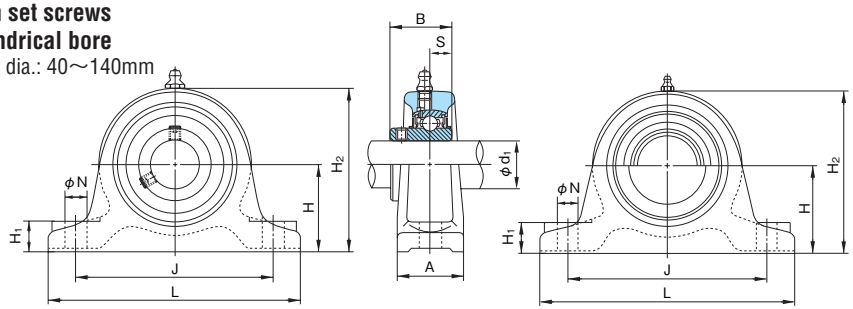


With steel cover

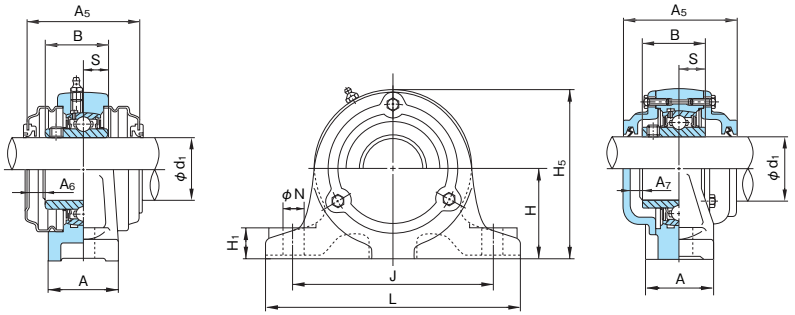


With cast covers

1N=0.102kgf

| Shaft dia. $d_1$ (mm) | Unit No. | Boundary dimensions (mm) | | | | | | | | | | | | | | Bolt size | Bearings | | | Housing No. | Unit No. with steel covers | Unit No. with cast covers | Mass of Unit (kg) | | |
|---|---|---|---|---|---|---|---|---|---|---|---|---|---|---|---|---|---|---|---|---|---|---|---|---|---|
| | | H | L | A | J | N | $H_1$ | $H_2$ | $H_5$ | B | S | $A_4$ | $A_5$ | $A_6$ | $A_7$ | | No. | Basic load rating (N) Cr | Basic load rating (N) Cor | | Covers with rubber seal (End cover on one side) | Covers with rubber seal (End cover on one side) | standard | with steel cover | With cast covers |
| 40 | **UCIP208** | 60 | 200 | 60 | 150 | 19 | 25 | 115 | 115 | 49.2 | 19 | 86 | 90 | 12 | 8 | M16 | UC208 | 29300 | 17900 | IP208 | **UCIP208C(E)** | **CUCIP208C(CE)** | 3.6 | 3.8 | 4.0 |
| 45 | **UCIP209** | 70 | 210 | 60 | 160 | 19 | 25 | 128 | 130 | 49.2 | 19 | 92 | 90 | 15 | 8 | M16 | UC209 | 33000 | 20500 | IP209 | **UCIP209C(E)** | **CUCIP209C(CE)** | 3.8 | 4.1 | 4.5 |
| 50 | **UCIP210** | 70 | 220 | 60 | 170 | 19 | 28 | 132 | 133 | 51.6 | 19 | 92 | 98 | 12 | 10 | M16 | UC210 | 35500 | 23200 | IP210 | **UCIP210C(E)** | **CUCIP210C(CE)** | 4.4 | 4.7 | 5.0 |
| 55 | **UCIP211** | 80 | 230 | 60 | 180 | 19 | 28 | 148 | 150 | 55.6 | 22.2 | 97 | 100 | 14 | 10 | M16 | UC211 | 43000 | 29400 | IP211 | **UCIP211C(E)** | **CUCIP211C(CE)** | 5.5 | 5.8 | 6.2 |
| 60 | **UCIP212** | 80 | 260 | 70 | 200 | 22 | 30 | 155 | 155 | 65.1 | 25.4 | 113 | 114 | 15 | 11 | M20 | UC212 | 52500 | 36100 | IP212 | **UCIP212C(E)** | **CUCIP212C(CE)** | 5.9 | 6.3 | 8.0 |
| 65 | **UCIP213** | 90 | 280 | 70 | 220 | 22 | 30 | 172 | 172 | 65.1 | 25.4 | 111 | 118 | 14 | 13 | M20 | UC213 | 57500 | 40000 | IP213 | **UCIP213C(E)** | **CUCIP213C(CE)** | 7.5 | 8.0 | 10.1 |
| | **UCIP313** | 110 | 310 | 70 | 250 | 22 | 30 | 208 | 208 | 75 | 30 | — | 140 | — | 17 | M20 | UC313 | 92500 | 59700 | IP313 | — | **CUCIP313C(CE)** | 12.4 | — | 16.5 |
| 70 | **UCIP314** | 110 | 330 | 75 | 270 | 25 | 35 | 215 | 215 | 78 | 33 | — | 140 | — | 17 | M22 | UC314 | 104000 | 68000 | IP314 | — | **CUCIP314C(CE)** | 14.9 | — | 19.2 |
| 75 | **UCIP315** | 120 | 340 | 75 | 280 | 25 | 35 | 230 | 230 | 82 | 32 | — | 150 | — | 17 | M22 | UC315 | 114000 | 76900 | IP315 | — | **CUCIP315C(CE)** | 16.2 | — | 21.8 |
| 80 | **UCIP316** | 120 | 350 | 85 | 290 | 25 | 40 | 235 | 235 | 86 | 34 | — | 154 | — | 17 | M22 | UC316 | 123000 | 86400 | IP316 | — | **CUCIP316C(CE)** | 20.8 | — | 24.8 |
| 85 | **UCIP317** | 130 | 370 | 85 | 310 | 25 | 40 | 255 | 255 | 96 | 40 | — | 164 | — | 18 | M22 | UC317 | 132000 | 96500 | IP317 | — | **CUCIP317C(CE)** | 23.1 | — | 29.4 |
| 90 | **UCIP318** | 130 | 400 | 85 | 330 | 29 | 45 | 260 | 260 | 96 | 40 | — | 168 | — | 20 | M24 | UC318 | 143000 | 107200 | IP318 | — | **CUCIP318C(CE)** | 25.7 | — | 33.2 |
| 95 | **UCIP319** | 150 | 410 | 85 | 340 | 29 | 45 | 285 | 285 | 103 | 41 | — | 180 | — | 20 | M24 | UC319 | 153000 | 118400 | IP319 | — | **CUCIP319C(CE)** | 29.7 | — | 38.5 |
| 100 | **UCIP320** | 150 | 430 | 85 | 360 | 29 | 45 | 295 | 295 | 108 | 42 | — | 190 | — | 21 | M24 | UC320 | 173000 | 140400 | IP320 | — | **CUCIP320C(CE)** | 33.4 | — | 44.2 |
| 110 | **UCIP322** | 170 | 490 | 100 | 410 | 32 | 50 | 335 | 335 | 117 | 46 | — | 210 | — | 26 | M27 | UC322 | 205000 | 178800 | IP322 | — | **CUCIP322C(CE)** | 50.4 | — | 61.2 |
| 120 | **UCIP324** | 170 | 510 | 100 | 430 | 32 | 50 | 345 | 345 | 126 | 51 | — | 220 | — | 25 | M27 | UC324 | 207000 | 184800 | IP324 | — | **CUCIP324C(CE)** | 56.8 | — | 72.3 |
| 130 | **UCIP326** | 200 | 550 | 110 | 470 | 32 | 50 | 390 | 390 | 135 | 54 | — | 230 | — | 24 | M27 | UC326 | 229000 | 214300 | IP326 | — | **CUCIP326C(CE)** | 73.2 | — | 94.3 |
| 140 | **UCIP328** | 200 | 590 | 110 | 500 | 35 | 55 | 400 | 400 | 145 | 59 | — | 240 | — | 24 | M30 | UC328 | 255000 | 246000 | IP328 | — | **CUCIP328C(CE)** | 83.5 | | 105 |

Remarks: 1. Grease nipple : 1/4-28UNF for bore number 13 and under
PF1/8 for bore number 14 and over

Remarks: 2. Examples of unit numbers with covers:

With steel cover { Covers with rubber seal on both sides :UCIP210C
An end cover and a cover with rubber seal :UCIP210E

With cast covers { Covers with rubber seal on both sides :CUCIP210C
An end cover and a cover with rubber seal :CUCIP210CE

# Pillow Block Units

## UKIP+H type

### With adapter assembly

### Tapered bore

Shaft dia.: 35～125mm

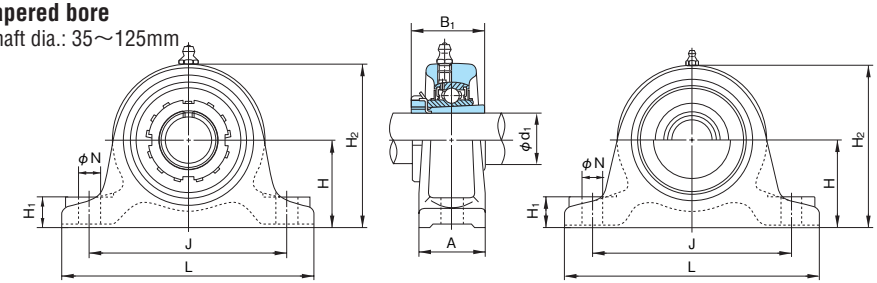


With steel covers

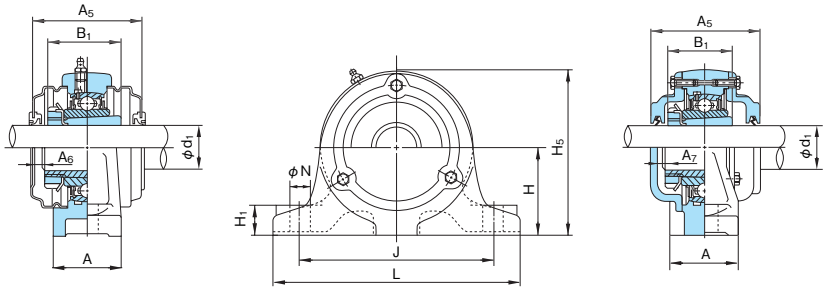


With cast covers

1N=0.102kgf

| Shaft dia. $d_1$ (mm) | Unit No. | Boundary dimensions (mm) | | | | | | | | | | | | | Bolt size | Bearings | | | Housing No. | Unit No. with steel covers | Unit No. with cast covers | Mass of Unit (kg) | | |
|---|---|---|---|---|---|---|---|---|---|---|---|---|---|---|---|---|---|---|---|---|---|---|---|---|
| | | H | L | A | J | N | $H_1$ | $H_2$ | $H_5$ | $B_1$ | $A_4$ | $A_5$ | $A_6$ | $A_7$ | | No. | Basic load rating (N) Cr | Basic load rating (N) Cor | | Covers with rubber seal (End cover on one side) | Covers with rubber seal (End cover on one side) | standard | With steel cover | With cast cover |
| 35 | **UKIP208+H2308** | 60 | 200 | 60 | 150 | 19 | 25 | 115 | 115 | 46 | 86 | 90 | 17 | 14 | M16 | UK208+H2308 | 29300 | 17900 | IP208 | **UKIP208C(E)+H2308** | **CUKIP208C(CE)+H2308** | 3.7 | 3.9 | 4.1 |
| 40 | **UKIP209+H2309** | 70 | 210 | 60 | 160 | 19 | 25 | 128 | 130 | 50 | 92 | 90 | 19 | 13 | M16 | UK209+H2309 | 33000 | 20500 | IP209 | **UKIP209C(E)+H2309** | **CUKIP209C(CE)+H2309** | 3.9 | 4.2 | 4.7 |
| 45 | **UKIP210+H2310** | 70 | 220 | 60 | 170 | 19 | 28 | 132 | 133 | 55 | 92 | 98 | 17 | 15 | M16 | UK210+H2310 | 35500 | 23200 | IP210 | **UKIP210C(E)+H2310** | **CUKIP210C(CE)+H2310** | 4.6 | 4.9 | 5.2 |
| 50 | **UKIP211+H2311** | 80 | 230 | 60 | 180 | 19 | 28 | 148 | 150 | 59 | 97 | 100 | 19 | 15 | M16 | UK211+H2311 | 43000 | 29400 | IP211 | **UKIP211C(E)+H2311** | **CUKIP211C(CE)+H2311** | 5.6 | 6.0 | 6.4 |
| 55 | **UKIP212+H2312** | 80 | 260 | 70 | 200 | 22 | 30 | 155 | 155 | 62 | 113 | 114 | 24 | 20 | M20 | UK212+H2312 | 52500 | 36100 | IP212 | **UKIP212C(E)+H2312** | **CUKIP212C(CE)+H2312** | 5.9 | 6.4 | 8.2 |
| 60 | **UKIP213+H2313** | 90 | 280 | 70 | 220 | 22 | 30 | 172 | 172 | 65 | 111 | 118 | 21 | 20 | M20 | UK213+H2313 | 57500 | 40000 | IP213 | **UKIP213C(E)+H2313** | **CUKIP213C(CE)+H2313** | 7.7 | 8.2 | 10.4 |
| | **UKIP313+H2313** | 110 | 310 | 70 | 250 | 22 | 30 | 208 | 208 | 65 | — | 140 | — | 24 | M20 | UK313+H2313 | 92500 | 59700 | IP313 | — | **CUKIP313C(CE)+H2313** | 12.4 | — | 16.5 |
| 65 | **UKIP315+H2315** | 120 | 340 | 75 | 280 | 25 | 35 | 230 | 230 | 73 | — | 150 | — | 25 | M22 | UK315+H2315 | 114000 | 76900 | IP315 | — | **CUKIP315C(CE)+H2315** | 16.3 | — | 22.2 |
| 70 | **UKIP316+H2316** | 120 | 350 | 85 | 290 | 25 | 40 | 235 | 235 | 78 | — | 154 | — | 23 | M22 | UK316+H2316 | 123000 | 86400 | IP316 | — | **CUKIP316C(CE)+H2316** | 21.0 | — | 25.2 |
| 75 | **UKIP317+H2317** | 130 | 370 | 85 | 310 | 25 | 40 | 255 | 255 | 82 | — | 164 | — | 26 | M22 | UK317+H2317 | 132000 | 96500 | IP317 | — | **CUKIP317C(CE)+H2317** | 23.1 | — | 29.6 |
| 80 | **UKIP318+H2318** | 130 | 400 | 85 | 330 | 29 | 45 | 260 | 260 | 86 | — | 168 | — | 26 | M24 | UK318+H2318 | 143000 | 107200 | IP318 | — | **CUKIP318C(CE)+H2318** | 25.9 | — | 34.2 |
| 85 | **UKIP319+H2319** | 150 | 410 | 85 | 340 | 29 | 45 | 285 | 285 | 90 | — | 180 | — | 30 | M24 | UK319+H2319 | 153000 | 118400 | IP319 | — | **CUKIP319C(CE)+H2319** | 29.7 | — | 38.7 |
| 90 | **UKIP320+H2320** | 150 | 430 | 85 | 360 | 29 | 45 | 295 | 295 | 97 | — | 190 | — | 31 | M24 | UK320+H2320 | 173000 | 140400 | IP320 | — | **CUKIP320C(CE)+H2320** | 33.4 | — | 44.8 |
| 100 | **UKIP322+H2322** | 170 | 490 | 100 | 410 | 32 | 50 | 335 | 335 | 105 | — | 210 | — | 36 | M27 | UK322+H2322 | 205000 | 178800 | IP322 | — | **CUKIP322C(CE)+H2322** | 50.5 | — | 61.9 |
| 110 | **UKIP324+H2324** | 170 | 510 | 100 | 430 | 32 | 50 | 345 | 345 | 112 | — | 220 | — | 35 | M27 | UK324+H2324 | 207000 | 184800 | IP324 | — | **CUKIP324C(CE)+H2324** | 56.3 | — | 72.5 |
| 115 | **UKIP326+H2326** | 200 | 550 | 110 | 470 | 32 | 50 | 390 | 390 | 121 | — | 230 | — | 36 | M27 | UK326+H2326 | 229000 | 214300 | IP326 | — | **CUKIP326C(CE)+H2326** | 73.5 | — | 95.8 |
| 125 | **UKIP328+H2328** | 200 | 590 | 110 | 500 | 35 | 55 | 400 | 400 | 131 | — | 240 | — | 37 | M30 | UK328+H2328 | 255000 | 246000 | IP328 | — | **CUKIP328C(CE)+H2328** | 83.8 | — | 106 |

Remarks: 1. Grease nipple : 1/4-28UNF for bore number 13 and under
PF1/8 for bore number 14 and over

Remarks: 2. Examples of unit numbers with covers:

With steel cover { Covers with rubber seal on both sides :UKIP210C+H2310
An end cover and a cover with rubber seal :CUKP210CE+H2310

With cast cover { Covers with rubber seal on both sides :CUKP210C+H2310
An end cover and a cover with rubber seal :CUKIP210CE+H2310

# Cast Steel Pillow Block Units

## UCPK type

### With set screws

### Cylindrical bore

Shaft dia.: 50～140mm

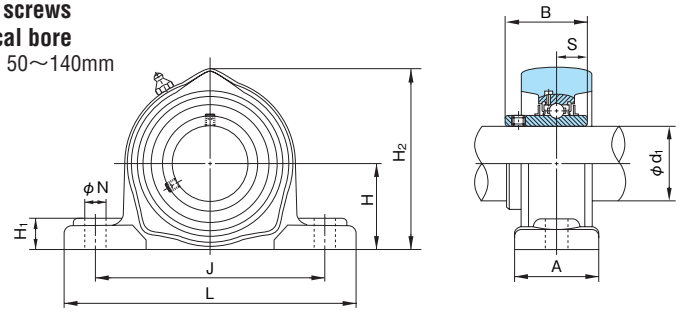


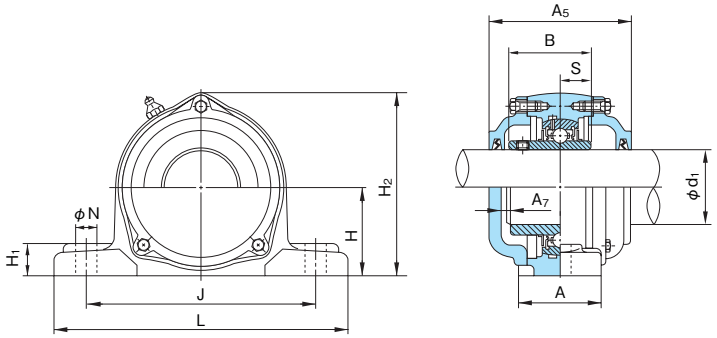


With cast cover

1N=0.102kgf

| Shaft dia. $d_1$ (mm) | Unit No. | Boundary dimensions (mm) | | | | | | | | | | | Bolt size | Bearings | | | Housing No. | Unit No. with cast covers | Mass of Unit (kg) | |
|---|---|---|---|---|---|---|---|---|---|---|---|---|---|---|---|---|---|---|---|---|
| | | H | L | A | J | N | $H_1$ | $H_2$ | B | S | $A_5$ | $A_7$ | | No. | Basic load rating (N) Cr | Basic load rating (N) Cor | | Covers with rubber seal (End cover on one side) | standard | with cast cover |
| 50 | UCPK210 | 57.2 | 200 | 55 | 159 | 19 | 22 | 120 | 51.6 | 19 | 98 | 10 | M16 | UC210 | 35500 | 23200 | PK210 | CUCPK210C(CE) | 3.5 | 4.4 |
| 55 | UCPK211 | 63.5 | 216 | 55 | 171 | 19 | 22 | 133 | 55.6 | 22.2 | 100 | 10 | M16 | UC211 | 43000 | 29400 | PK211 | CUCPK211C(CE) | 4.5 | 5.7 |
| 60 | UCPK212 | 69.8 | 233 | 65 | 184 | 19 | 25 | 145 | 65.1 | 25.4 | 114 | 11 | M16 | UC212 | 52500 | 36100 | PK212 | CUCPK212C(CE) | 5.7 | 6.8 |
| 65 | UCPK213 | 76.2 | 258 | 70 | 203 | 24 | 27 | 156 | 65.1 | 25.4 | 118 | 13 | M20 | UC213 | 57500 | 40000 | PK213 | CUCPK213C(CE) | 6.7 | 8.2 |
| | UCPK313 | 90 | 326 | 85 | 260 | 24 | 36 | 188 | 75 | 30 | 140 | 17 | M20 | UC313 | 92500 | 59700 | PK313 | CUCPK313C(CE) | 12.2 | 14.6 |
| 70 | UCPK214 | 79.4 | 266 | 72 | 210 | 24 | 27 | 162 | 74.6 | 30.2 | 134 | 16 | M20 | UC214 | 62000 | 44000 | PK214 | CUCPK214C(CE) | 7.6 | 9.4 |
| | UCPK314 | 95 | 350 | 85 | 280 | 26 | 40 | 198 | 78 | 33 | 140 | 17 | M22 | UC314 | 104000 | 68000 | PK314 | CUCPK314C(CE) | 14.8 | 17.5 |
| 75 | UCPK215 | 82.6 | 272 | 74 | 217 | 24 | 28 | 167 | 77.8 | 33.3 | 136 | 17 | M20 | UC215 | 66000 | 48200 | PK215 | CUCPK215C(CE) | 8.1 | 10.3 |
| | UCPK315 | 100 | 366 | 90 | 290 | 26 | 40 | 208 | 82 | 32 | 150 | 17 | M22 | UC315 | 114000 | 76900 | PK315 | CUCPK315C(CE) | 17.0 | 20.0 |
| 80 | UCPK216 | 88.9 | 288 | 75 | 232 | 24 | 30 | 188 | 82.6 | 33.3 | 146 | 15 | M20 | UC216 | 72500 | 53000 | PK216 | CUCPK216C(CE) | 10.4 | 13.3 |
| | UCPK316 | 106 | 386 | 100 | 300 | 26 | 45 | 219 | 86 | 34 | 154 | 17 | M22 | UC316 | 123000 | 86400 | PK316 | CUCPK316C(CE) | 19.7 | 23.4 |
| 85 | UCPK217 | 95.2 | 303 | 80 | 247 | 24 | 32 | 199 | 85.7 | 34.1 | 150 | 15 | M20 | UC217 | 83500 | 61800 | PK217 | CUCPK217C(CE) | 12.2 | 15.4 |
| | UCPK317 | 112 | 407 | 105 | 320 | 32 | 45 | 234 | 96 | 40 | 164 | 18 | M27 | UC317 | 132000 | 96500 | PK317 | CUCPK317C(CE) | 22.9 | 27.3 |
| 90 | UCPK218 | 101.6 | 322 | 85 | 262 | 26 | 34 | 211 | 96 | 39.7 | 164 | 17 | M22 | UC218 | 95500 | 71400 | PK218 | CUCPK218C(CE) | 15.2 | 18.9 |
| | UCPK318 | 118 | 417 | 105 | 330 | 32 | 50 | 245 | 96 | 40 | 168 | 20 | M27 | UC318 | 143000 | 107200 | PK318 | CUCPK318C(CE) | 25.9 | 30.8 |
| 95 | UCPK319 | 125 | 455 | 115 | 360 | 35 | 50 | 257 | 103 | 41 | 180 | 20 | M30 | UC319 | 153000 | 118400 | PK319 | CUCPK319C(CE) | 33.1 | 38.4 |
| 100 | UCPK320 | 140 | 475 | 115 | 380 | 35 | 55 | 282 | 108 | 42 | 190 | 21 | M30 | UC320 | 173000 | 140400 | PK320 | CUCPK320C(CE) | 40.2 | 46.4 |
| 105 | UCPK321 | 140 | 475 | 115 | 380 | 35 | 55 | 287 | 112 | 44 | 194 | 21 | M30 | UC321 | 183000 | 153100 | PK321 | CUCPK321C(CE) | 40.4 | 47.4 |
| 110 | UCPK322 | 150 | 505 | 130 | 400 | 38 | 60 | 305 | 117 | 46 | 210 | 26 | M33 | UC322 | 205000 | 178800 | PK322 | CUCPK322C(CE) | 47.8 | 55.9 |
| 120 | UCPK324 | 160 | 555 | 130 | 450 | 38 | 70 | 328 | 126 | 51 | 220 | 25 | M33 | UC324 | 207000 | 184800 | PK324 | CUCPK324C(CE) | 63.8 | 75.2 |
| 130 | UCPK326 | 180 | 585 | 130 | 480 | 38 | 80 | 358 | 135 | 54 | 230 | 24 | M33 | UC326 | 229000 | 214300 | PK326 | CUCPK326C(CE) | 81.6 | 94.4 |
| 140 | UCPK328 | 200 | 605 | 130 | 500 | 38 | 80 | 388 | 145 | 59 | 240 | 24 | M33 | UC328 | 255000 | 246000 | PK328 | CUCPK328C(CE) | 95.9 | 110 |

Remarks: 1. Please contact NACHI for units number appeared in italic.
2. Grease nipple : 1/4-28UNF for bore number 13 and under
PF1/8 for bore number 14 and over

Remarks: 3. Examples of unit numbers with covers:
With cast cover { Covers with rubber seal on both sides :CUCPK210C
An end cover and a cover with rubber seal :CUCPK210CE

# Cast Steel Pillow Block Units

## UKPK+H type

### With adapter assembly

### Tapered bore

Shaft dia.: 45～125mm

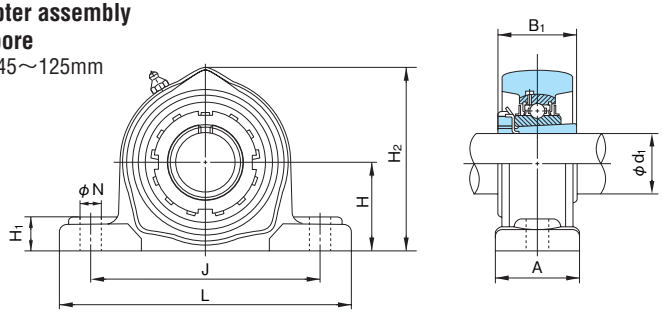


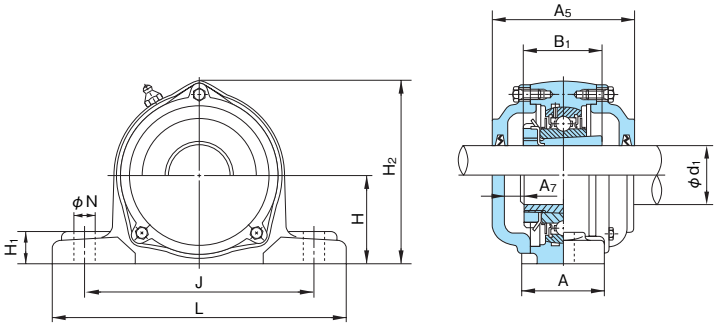


With cast cover

1N=0.102kgf

| Shaft dia. $d_1$ (mm) | Unit No. | Boundary dimensions (mm) | | | | | | | | | | Bolt size | Bearings | | | Housing No. | Unit No. with cast covers | Mass of Unit (kg) | |
|---|---|---|---|---|---|---|---|---|---|---|---|---|---|---|---|---|---|---|---|
| | | H | L | A | J | N | $H_1$ | $H_2$ | $B_1$ | $A_5$ | $A_7$ | | No. | Basic load rating (N) Cr | Basic load rating (N) Cor | | Both covers with rubber seal (one side end cover) | standard | with cast cover |
| 45 | UKPK210+H2310 | 57.2 | 200 | 55 | 159 | 19 | 22 | 120 | 55 | 98 | 15 | M16 | UK210+H2310 | 35500 | 23200 | PK210 | CUKPK210C(CE)+H2310 | 3.6 | 4.6 |
| 50 | UKPK211+H2311 | 63.5 | 216 | 55 | 171 | 19 | 22 | 133 | 59 | 100 | 15 | M16 | UK211+H2311 | 43000 | 29400 | PK211 | CUKPK211C(CE)+H2311 | 4.7 | 5.9 |
| 55 | UKPK212+H2312 | 69.8 | 233 | 65 | 184 | 19 | 25 | 145 | 62 | 114 | 20 | M16 | UK212+H2312 | 52500 | 36100 | PK212 | CUKPK212C(CE)+H2312 | 5.7 | 6.9 |
| 60 | UKPK213+H2313 | 76.2 | 258 | 70 | 203 | 24 | 27 | 156 | 65 | 118 | 20 | M20 | UK213+H2313 | 57500 | 40000 | PK213 | CUKPK213C(CE)+H2313 | 6.8 | 8.4 |
| | UKPK313+H2313 | 90 | 326 | 85 | 260 | 24 | 36 | 188 | 65 | 140 | 24 | M20 | UK313+H2313 | 92500 | 59700 | PK313 | CUKPK313C(CE)+H2313 | 12.1 | 14.6 |
| 65 | UKPK215+H2315 | 82.6 | 272 | 74 | 217 | 24 | 28 | 167 | 73 | 136 | 26 | M20 | UK215+H2315 | 66000 | 48200 | PK215 | CUKPK215C(CE)+H2315 | 8.5 | 10.7 |
| | UKPK315+H2315 | 100 | 366 | 90 | 290 | 26 | 40 | 208 | 73 | 150 | 25 | M22 | UK315+H2315 | 114000 | 76900 | PK315 | CUKPK315C(CE)+H2315 | 17.2 | 20.4 |
| 70 | UKPK216+H2316 | 88.9 | 288 | 75 | 232 | 24 | 30 | 188 | 78 | 146 | 26 | M20 | UK216+H2316 | 72500 | 53000 | PK216 | CUKPK216C(CE)+H2316 | 10.9 | 13.8 |
| | UKPK316+H2316 | 106 | 386 | 100 | 300 | 26 | 45 | 219 | 78 | 154 | 23 | M22 | UK316+H2316 | 123000 | 86400 | PK316 | CUKPK316C(CE)+H2316 | 20.0 | 23.7 |
| 75 | UKPK217+H2317 | 95.2 | 303 | 80 | 247 | 24 | 32 | 199 | 82 | 150 | 26 | M20 | UK217+H2317 | 83500 | 61800 | PK217 | CUKPK217C(CE)+H2317 | 12.8 | 16.1 |
| | UKPK317+H2317 | 112 | 407 | 105 | 320 | 32 | 45 | 234 | 82 | 164 | 26 | M27 | UK317+H2317 | 132000 | 96500 | PK317 | CUKPK317C(CE)+H2317 | 22.9 | 27.4 |
| 80 | UKPK218+H2318 | 101.6 | 322 | 85 | 262 | 26 | 34 | 211 | 86 | 164 | 31 | M22 | UK218+H2318 | 95500 | 71400 | PK218 | CUKPK218C(CE)+H2318 | 15.5 | 19.4 |
| | UKPK318+H2318 | 118 | 417 | 105 | 330 | 32 | 50 | 245 | 86 | 168 | 26 | M27 | UK318+H2318 | 143000 | 107200 | PK318 | CUKPK318C(CE)+H2318 | 26.1 | 31.2 |
| 85 | UKPK319+H2319 | 125 | 455 | 115 | 360 | 35 | 50 | 257 | 90 | 180 | 30 | M30 | UK319+H2319 | 153000 | 118400 | PK319 | CUKPK319C(CE)+H2319 | 33.1 | 38.7 |
| 90 | UKPK320+H2320 | 140 | 475 | 115 | 380 | 35 | 55 | 282 | 97 | 190 | 31 | M30 | UK320+H2320 | 173000 | 140400 | PK320 | CUKPK320C(CE)+H2320 | 40.2 | 46.7 |
| 100 | UKPK322+H2322 | 150 | 505 | 130 | 400 | 38 | 60 | 305 | 105 | 210 | 36 | M33 | UK322+H2322 | 205000 | 178800 | PK322 | CUKPK322C(CE)+H2322 | 47.9 | 56.5 |
| 110 | UKPK324+H2324 | 160 | 555 | 130 | 450 | 38 | 70 | 328 | 112 | 220 | 35 | M33 | UK324+H2324 | 207000 | 184800 | PK324 | CUKPK324C(CE)+H2324 | 63.3 | 75.1 |
| 115 | UKPK326+H2326 | 180 | 585 | 130 | 480 | 38 | 80 | 358 | 121 | 230 | 36 | M33 | UK326+H2326 | 229000 | 214300 | PK326 | CUKPK326C(CE)+H2326 | 81.9 | 95.3 |
| 125 | UKPK328+H2328 | 200 | 605 | 130 | 500 | 38 | 80 | 388 | 131 | 240 | 37 | M33 | UK328+H2328 | 255000 | 246000 | PK328 | CUKPK328C(CE)+H2328 | 96.2 | 111 |

Remarks: 1. Please contact NACHI for units number appeared in italic.
2. Grease nipple : 1/4-28UNF for bore number 13 and under
PF1/8 for bore number 14 and over

Remarks: 3. Examples of unit numbers with covers:
with cast cover { Covers with rubber seal on both sides :CUKPK210C+H2310
An end cover and a cover with rubber seal:CUKP210CE+H2310

NACHI

# Pillow Block Units

## UCPH type

### With set screws

### Cylindrical bore

Shaft dia.: 12～50mm

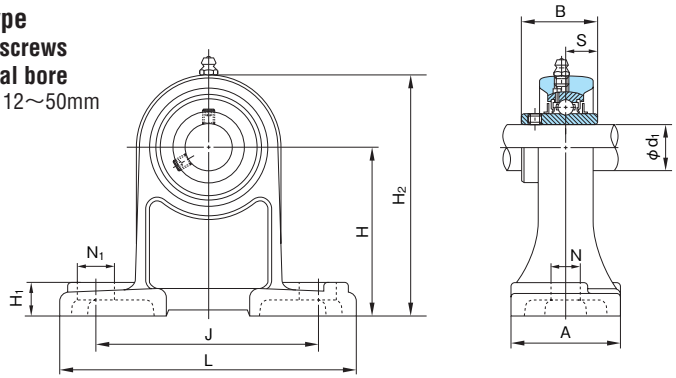


1N=0.102kgf

| Shaft dia. $d_1$ (mm) | Unit No. | Boundary dimensions (mm) | | | | | | | | | | Bolt size | | Bearings | | | Housing No. | Mass of Unit (kg) |
|---|---|---|---|---|---|---|---|---|---|---|---|---|---|---|---|---|---|---|
| | | H | L | A | J | N | $N_1$ | $H_1$ | $H_2$ | B | S | | | No. | Basic load rating (N) Cr | Basic load rating (N) Cor | | |
| **12** | **UCPH201** | 70 | 127 | 40 | 95 | 13 | 19 | 15 | 101 | 31 | 12.7 | M10 | | UC201 | 12800 | 6600 | PH204 | 1.0 |
| **15** | **UCPH202** | 70 | 127 | 40 | 95 | 13 | 19 | 15 | 101 | 31 | 12.7 | M10 | | UC202 | 12800 | 6600 | PH204 | 0.99 |
| **17** | **UCPH203** | 70 | 127 | 40 | 95 | 13 | 19 | 15 | 101 | 31 | 12.7 | M10 | | UC203 | 12800 | 6600 | PH204 | 0.98 |
| **20** | **UCPH204** | 70 | 127 | 40 | 95 | 13 | 19 | 15 | 101 | 31 | 12.7 | M10 | | UC204 | 12800 | 6600 | PH204 | 0.96 |
| **25** | **UCPH205** | 80 | 140 | 50 | 105 | 13 | 19 | 16 | 114 | 34 | 14.3 | M10 | | UC205 | 14000 | 7900 | PH205 | 1.2 |
| **30** | **UCPH206** | 90 | 165 | 50 | 121 | 17 | 21 | 18 | 130 | 38.1 | 15.9 | M14 | | UC206 | 19600 | 11300 | PH206 | 1.9 |
| **35** | **UCPH207** | 95 | 167 | 60 | 127 | 17 | 21 | 19 | 140 | 42.9 | 17.5 | M14 | | UC207 | 25900 | 15400 | PH207 | 2.4 |
| **40** | **UCPH208** | 100 | 184 | 70 | 137 | 17 | 25 | 19 | 149 | 49.2 | 19 | M14 | | UC208 | 29300 | 17900 | PH208 | 2.8 |
| **45** | **UCPH209** | 105 | 190 | 70 | 146 | 17 | 25 | 20 | 157 | 49.2 | 19 | M14 | | UC209 | 33000 | 20500 | PH209 | 3.2 |
| **50** | **UCPH210** | 110 | 206 | 70 | 159 | 20 | 25 | 22 | 165 | 51.6 | 19 | M16 | | UC210 | 35500 | 23200 | PH210 | 3.6 |

Remark: Grease nipple :1/4-28UNF

# Pillow Block Units

## UCPA type

### With set screws

### Cylindrical bore

Shaft dia.: 12～50mm

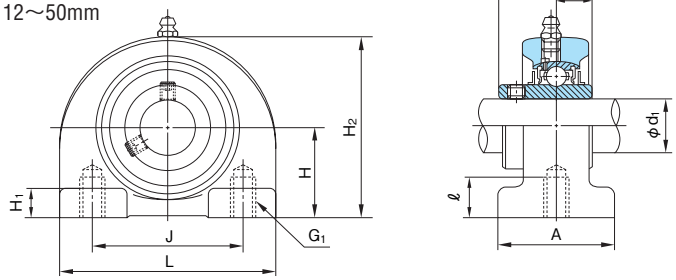


1N=0.102kgf

| Shaft dia. $d_1$ (mm) | Unit No. | Boundary dimensions (mm) | | | | | | | | | | | Bearings | | | Housing No. | Mass of Unit (kg) |
|---|---|---|---|---|---|---|---|---|---|---|---|---|---|---|---|---|---|
| | | H | L | A | J | $G_1$ | ℓ | $H_1$ | $H_2$ | B | S | | No. | Basic load rating (N) Cr | Basic load rating (N) Cor | | |
| **12** | **UCPA201** | 30.2 | 76 | 38 | 52 | M10×1.5 | 12 | 8 | 62 | 31 | 12.7 | | UC201 | 12800 | 6600 | PA204 | 0.59 |
| **15** | **UCPA202** | 30.2 | 76 | 38 | 52 | M10×1.5 | 12 | 8 | 62 | 31 | 12.7 | | UC202 | 12800 | 6600 | PA204 | 0.57 |
| **17** | **UCPA203** | 30.2 | 76 | 38 | 52 | M10×1.5 | 12 | 8 | 62 | 31 | 12.7 | | UC203 | 12800 | 6600 | PA204 | 0.56 |
| **20** | **UCPA204** | 30.2 | 76 | 38 | 52 | M10×1.5 | 12 | 8 | 62 | 31 | 12.7 | | UC204 | 12800 | 6600 | PA204 | 0.54 |
| **25** | **UCPA205** | 36.5 | 84 | 38 | 56 | M10×1.5 | 15 | 10 | 72 | 34 | 14.3 | | UC205 | 14000 | 7900 | PA205 | 0.73 |
| **30** | **UCPA206** | 42.9 | 94 | 48 | 66 | M14×2 | 18 | 10 | 84 | 38.1 | 15.9 | | UC206 | 19600 | 11300 | PA206 | 1.11 |
| **35** | **UCPA207** | 47.6 | 110 | 48 | 80 | M14×2 | 20 | 12 | 95 | 42.9 | 17.5 | | UC207 | 25900 | 15400 | PA207 | 1.63 |
| **40** | **UCPA208** | 49.2 | 116 | 54 | 84 | M14×2 | 20 | 12 | 100 | 49.2 | 19 | | UC208 | 29300 | 17900 | PA208 | 1.85 |
| **45** | **UCPA209** | 54.2 | 120 | 54 | 90 | M14×2 | 25 | 12 | 108 | 49.2 | 19 | | UC209 | 33000 | 20500 | PA209 | 2.11 |
| **50** | **UCPA210** | 57.2 | 130 | 60 | 94 | M16×2 | 25 | 14 | 116 | 51.6 | 19 | | UC210 | 35500 | 23200 | PA210 | 2.52 |

Remark: Grease nipple: 1/4-28UNF

# Pillow Block Units

## UCEP type

### With set screws

### Cylindrical bore

Shaft dia.: 20～85mm

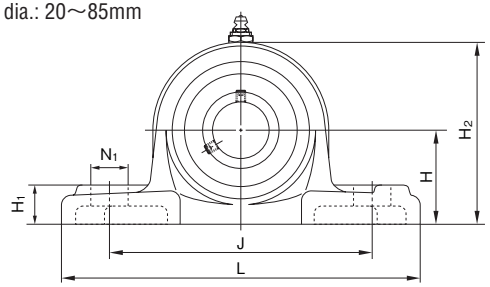


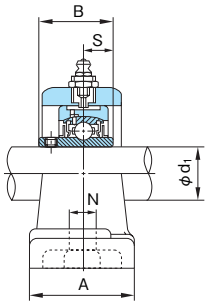


1N=0.102kgf

| Shaft dia. $d_1$ (mm) | Unit No. | Boundary dimensions (mm) | | | | | | | | | | Axial displacement (mm) | Bolt size | | Bearings | | | Housing No. | | Mass of Unit (kg) |
|---|---|---|---|---|---|---|---|---|---|---|---|---|---|---|---|---|---|---|---|---|
| | | H | L | A | J | N | $N_1$ | $H_1$ | $H_2$ | B | S | | | | No. | Basic load rating (N) Cr | Basic load rating (N) Cor | Pillow type Housing | Cartridge type Housing | |
| 20 | UCEP204 | 36.5 | 140 | 38 | 105 | 13 | 16 | 16 | 73 | 31 | 12.7 | 10 | M10 | | UC204 | 12800 | 6600 | EP204 | EC204 | 1.1 |
| 25 | UCEP205 | 44.4 | 159 | 51 | 119 | 17 | 20 | 18 | 85 | 34 | 14.3 | 10 | M14 | | UC205 | 14000 | 7900 | EP205 | EC205 | 1.5 |
| 30 | UCEP206 | 47.6 | 175 | 57 | 127 | 17 | 20 | 20 | 94 | 38.1 | 15.9 | 10 | M14 | | UC206 | 19600 | 11300 | EP206 | EC206 | 2.0 |
| 35 | UCEP207 | 54 | 203 | 57 | 144 | 17 | 20 | 22 | 108 | 42.9 | 17.5 | 10 | M14 | | UC207 | 25900 | 15400 | EP207 | EC207 | 2.7 |
| 40 | UCEP208 | 58.7 | 222 | 67 | 156 | 20 | 24 | 26 | 116 | 49.2 | 19 | 10 | M16 | | UC208 | 29300 | 17900 | EP209 | EC208 | 3.5 |
| 45 | UCEP209 | 58.7 | 222 | 67 | 156 | 20 | 24 | 26 | 116 | 49.2 | 19 | 10 | M16 | | UC209 | 33000 | 20500 | EP209 | EC209 | 3.4 |
| 50 | UCEP210 | 63.5 | 241 | 73 | 171 | 20 | 26 | 27 | 126 | 51.6 | 19 | 10 | M16 | | UC210 | 35500 | 23200 | EP210 | EC210 | 4.1 |
| 55 | UCEP211 | 69.8 | 260 | 79 | 184 | 25 | 28 | 30 | 139 | 55.6 | 22.2 | 10 | M20 | | UC211 | 43000 | 29400 | EP211 | EC211 | 5.6 |
| 60 | UCEP212 | 76.2 | 286 | 83 | 203 | 25 | 30 | 32 | 151 | 65.1 | 25.4 | 10 | M20 | | UC212 | 52500 | 36100 | EP212 | EC212 | 7.1 |
| 65 | UCEP213 | 76.2 | 286 | 83 | 203 | 25 | 30 | 32 | 154 | 65.1 | 25.4 | 10 | M20 | | UC213 | 57500 | 40000 | EP213 | EC213 | 7.0 |
| 70 | UCEP214 | 88.9 | 330 | 89 | 229 | 27 | 31 | 35 | 177 | 74.6 | 30.2 | 10 | M22 | | UC214 | 62000 | 44000 | EP215 | EC214 | 10.8 |
| 75 | UCEP215 | 88.9 | 330 | 89 | 229 | 27 | 31 | 35 | 177 | 77.8 | 33.3 | 10 | M22 | | UC215 | 66000 | 48200 | EP215 | EC215 | 10.9 |
| 80 | UCEP216 | 101.6 | 381 | 102 | 283 | 27 | 40 | 42 | 205 | 82.6 | 33.3 | 15 | M22 | | UC216 | 72500 | 53000 | EP217 | EC216 | 17.1 |
| 85 | UCEP217 | 101.6 | 381 | 102 | 283 | 27 | 40 | 42 | 205 | 85.7 | 34.1 | 15 | M22 | | UC217 | 83500 | 61800 | EP217 | EC217 | 16.4 |

Remarks: 1. This unit allows the movement in axial direction to be used on free side and the mounting dimensions are equal to UCPX00 type.
2. Grease nipple: 1/4-28UNF for bore number 13 and under
PF1/8 for bore number 14 and over

# Pillow Block Units

## BLLP type
### With set screws
### Cylindrical bore
Shaft dia.: 12～35mm

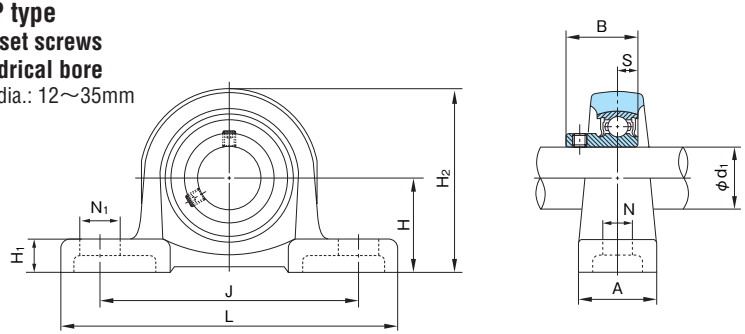


## KHLLP type
### With eccentric collar
### Cylindrical bore
Shaft dia.: 12～35mm

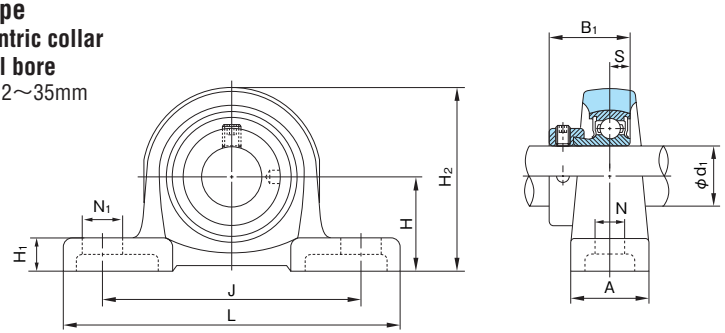


## BLLP type

1N=0.102kgf

| Shaft dia. $d_1$ (mm) | Unit No. | Boundary dimensions (mm) | | | | | | | | | | Bolt size | | Bearings | | | Housing No. | Mass of Unit (kg) |
|---|---|---|---|---|---|---|---|---|---|---|---|---|---|---|---|---|---|---|
| | | H | L | A | J | N | $N_1$ | $H_1$ | $H_2$ | B | S | | | No. | Basic load rating (N) Cr | Basic load rating (N) Cor | | |
| 12 | BLLP1J | 30.2 | 114 | 25 | 87 | 12 | 16 | 12 | 57 | 22 | 6 | M10 | | B1 | 9550 | 4800 | LLP3J | 0.39 |
| 15 | BLLP2J | 30.2 | 114 | 25 | 87 | 12 | 16 | 12 | 57 | 22 | 6 | M10 | | B2 | 9550 | 4800 | LLP3J | 0.38 |
| 17 | BLLP3J | 30.2 | 114 | 25 | 87 | 12 | 16 | 12 | 57 | 22 | 6 | M10 | | B3 | 9550 | 4800 | LLP3J | 0.36 |
| 20 | BLLP4J | 33.3 | 125 | 27 | 97 | 12 | 16 | 13 | 64 | 24.7 | 7 | M10 | | B4 | 12800 | 6600 | LLP4J | 0.48 |
| 25 | BLLP5J | 36.5 | 130 | 29 | 100 | 12 | 16 | 13 | 70 | 27 | 7.5 | M10 | | B5 | 14000 | 7900 | LLP5J | 0.59 |
| 30 | BLLP6J | 42.9 | 156 | 33 | 120 | 14 | 21 | 15 | 83 | 30.3 | 8 | M12 | | B6 | 19600 | 11300 | LLP6J | 0.70 |
| 35 | BLLP7J | 47.6 | 165 | 35 | 127 | 14 | 21 | 16 | 93 | 32.9 | 8.5 | M12 | | B7 | 25900 | 15400 | LLP7J | 0.98 |

Remark: Spherical bearing seating diameter of housing is applied tolerance class J7.

## KHLLP type

1N=0.102kgf

| Shaft dia. $d_1$ (mm) | Unit No. | Boundary dimensions (mm) | | | | | | | | | | Bolt size | | Bearings | | | Housing No. | Mass of Unit (kg) |
|---|---|---|---|---|---|---|---|---|---|---|---|---|---|---|---|---|---|---|
| | | H | L | A | J | N | $N_1$ | $H_1$ | $H_2$ | $B_1$ | S | | | No. | Basic load rating (N) Cr | Basic load rating (N) Cor | | |
| 12 | KHLLP201AJ | 30.2 | 114 | 25 | 87 | 12 | 16 | 12 | 57 | 28.6 | 6.5 | M10 | | KH201AE | 9550 | 4800 | LLP3J | 0.41 |
| 15 | KHLLP202AJ | 30.2 | 114 | 25 | 87 | 12 | 16 | 12 | 57 | 28.6 | 6.5 | M10 | | KH202AE | 9550 | 4800 | LLP3J | 0.40 |
| 17 | KHLLP203AJ | 30.2 | 114 | 25 | 87 | 12 | 16 | 12 | 57 | 28.6 | 6.5 | M10 | | KH203AE | 9550 | 4800 | LLP3J | 0.39 |
| 20 | KHLLP204AJ | 33.3 | 125 | 27 | 97 | 12 | 16 | 13 | 64 | 31 | 7.5 | M10 | | KH204AE | 12800 | 6600 | LLP4J | 0.52 |
| 25 | KHLLP205AJ | 36.5 | 130 | 29 | 100 | 12 | 16 | 13 | 70 | 31 | 7.5 | M10 | | KH205AE | 14000 | 7900 | LLP5J | 0.63 |
| 30 | KHLLP206AJ | 42.9 | 156 | 33 | 120 | 14 | 21 | 15 | 83 | 35.7 | 9 | M12 | | KH206AE | 19600 | 11300 | LLP6J | 0.76 |
| 35 | KHLLP207AJ | 47.6 | 165 | 35 | 127 | 14 | 21 | 16 | 93 | 38.9 | 9.5 | M12 | | KH207AE | 25900 | 15400 | LLP7J | 1.09 |

Remark: Spherical bearing seating diameter of housing is applied tolerance class J7.

# Pillow Block Units

## MUCP type (Stainless Steel)

### With set screws

### Cylindrical bore

Shaft dia.: 20～50mm

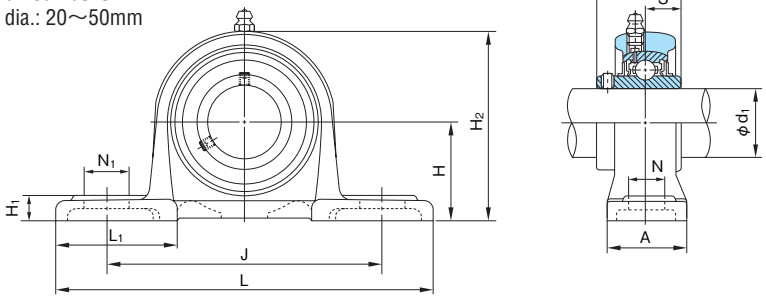


1N=0.102kgf

| Shaft dia. $d_1$ (mm) | Unit No. | Boundary dimensions (mm) | | | | | | | | | | | Bolt size | | Bearings | | | Housing No. | Mass of Unit (kg) |
|---|---|---|---|---|---|---|---|---|---|---|---|---|---|---|---|---|---|---|---|
| | | H | L | A | J | N | $N_1$ | $H_1$ | $H_2$ | $L_1$ | B | S | | | No. | Basic load rating (N) Cr | Basic load rating (N) Cor | | |
| 20 | MUCP204 | 33.3 | 127 | 30 | 95 | 13 | 19 | 9 | 64 | 42 | 31 | 12.7 | M10 | | MUC204 | 10900 | 5300 | MP204 | 0.50 |
| 25 | MUCP205 | 36.5 | 140 | 30 | 105 | 13 | 19 | 10 | 70 | 42 | 34 | 14.3 | M10 | | MUC205 | 11900 | 6300 | MP205 | 0.65 |
| 30 | MUCP206 | 42.9 | 165 | 36 | 121 | 17 | 21 | 11 | 82 | 53 | 38.1 | 15.9 | M14 | | MUC206 | 16700 | 9050 | MP206 | 0.95 |
| 35 | MUCP207 | 47.6 | 167 | 38 | 127 | 17 | 21 | 12 | 92 | 54 | 42.9 | 17.5 | M14 | | MUC207 | 22000 | 12300 | MP207 | 1.25 |
| 40 | MUCP208 | 49.2 | 184 | 40 | 137 | 17 | 22 | 12 | 98 | 52 | 49.2 | 19 | M14 | | MUC208 | 24900 | 14300 | MP208 | 1.50 |
| 45 | MUCP209 | 54 | 190 | 40 | 146 | 17 | 22 | 13 | 105 | 60 | 49.2 | 19 | M14 | | MUC209 | 28100 | 16400 | MP209 | 1.75 |
| 50 | MUCP210 | 57.2 | 206 | 45 | 159 | 20 | 25 | 14 | 112 | 65 | 51.6 | 19 | M16 | | MUC210 | 30200 | 18600 | MP210 | 2.05 |

Remark: Grease nipple: 1/4-28UNF

# Silver series

## Pillow Block Units

### UP type

### MUP type (Stainless Silver Series)

**With eccentric collar**

**Cylindrical bore**

Shaft dia.: 8～30mm

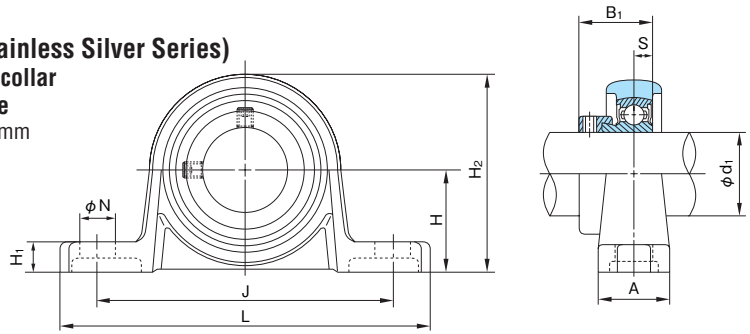


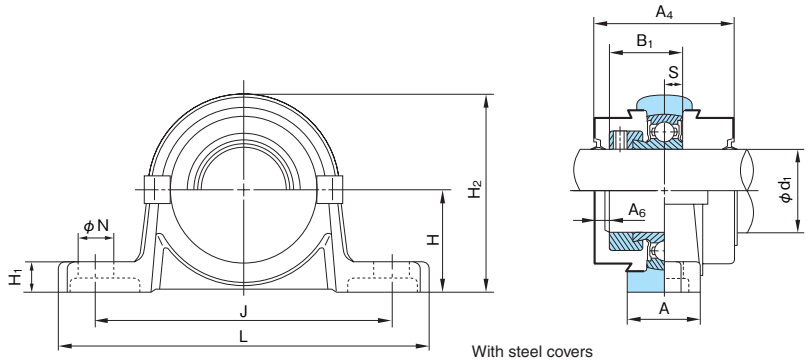


With steel covers

## UP type

1N=0.102kgf

| Shaft dia. $d_1$ (mm) | Unit No. | Boundary dimensions (mm) | | | | | | | | | | | Bolt size | Bearings | | | Housing No. | Unit No. with covers | Cover No. (Reference) | | Mass of Unit (kg) | |
|---|---|---|---|---|---|---|---|---|---|---|---|---|---|---|---|---|---|---|---|---|---|---|
| | | H | L | A | J | N | $H_1$ | $H_2$ | $B_1$ | S | $A_4$ | $A_6$ | | No. | Basic load rating (N) Cr | Basic load rating (N) Cor | | Covers with rubber seal (End cover on one side) | Cover with rubber seal | Side end cover | standard | with steel cover |
| 10 | **UP000** | 18 | 67 | 16 | 53 | 7 | 6 | 35 | 17.5 | 4 | 33 | 2 | M 6 | U000+ER | 4600 | 2000 | P000 | **UP000C(E)** | 000CP10 | 000CPE | 77 | 85 |
| 12 | **UP001** | 19 | 71 | 16 | 56 | 7 | 6 | 38 | 17.5 | 4 | 33 | 2 | M 6 | U001+ER | 5100 | 2400 | P001 | **UP001C(E)** | 001CP12 | 001CPE | 91 | 100 |
| 15 | **UP002** | 22 | 80 | 16 | 63 | 7 | 7 | 43 | 18.5 | 4.5 | 34 | 2 | M 6 | U002+ER | 5600 | 2800 | P002 | **UP002C(E)** | 002CP15 | 002CPE | 125 | 135 |
| 17 | **UP003** | 24 | 85 | 18 | 67 | 7 | 7 | 47 | 20.5 | 5 | 38 | 2 | M 6 | U003+ER | 6000 | 3300 | P003 | **UP003C(E)** | 003CP17 | 003CPE | 156 | 170 |
| 20 | **UP004** | 28 | 100 | 20 | 80 | 10 | 9 | 55 | 24.5 | 6 | 46 | 3 | M 8 | U004+ER | 9350 | 5100 | P04-5 | **UP004C(E)** | 04-5CP20 | 04-5CPE | 230 | 250 |
| 25 | **UP005** | 32 | 112 | 20 | 90 | 10 | 10 | 62 | 25.5 | 6 | 47 | 3 | M 8 | U005+ER | 10100 | 5800 | P05-6 | **UP005C(E)** | 05-6CP25 | 05-6CPE | 294 | 315 |
| 30 | **UP006** | 36 | 132 | 26 | 106 | 13 | 11 | 70 | 26.5 | 6.5 | 50 | 4 | M10 | U006+ER | 13200 | 8300 | P06-7 | **UP006C(E)** | 06-7CP30 | 06-7CPE | 454 | 480 |
| *8* | ***UP 08*** | *15* | *55* | *13* | *42* | *4.8* | *5* | *29* | *15* | *3.5* | — | — | *M 4* | *U08+ER*(1) | *3300* | *1260* | *P08* | — | — | — | *47* | — |

Note: (1) Set screw type U08X is also available and the width of inner ring is 12mm.
Remarks: 1. Please contact NACHI for unit numbers appearing in italic.

Remarks: 2. Examples of unit numbers with covers: Covers with rubber seal on both sides :UP005C
An end cover and a cover with rubber seal :UP005E

## MUP type (Stainless Silver Series)

1N=0.102kgf

| Shaft dia. $d_1$ (mm) | Unit No. | Boundary dimensions (mm) | | | | | | | | | | | Bolt size | Bearings | | | Housing No. | Unit No. with covers | Cover No. (Reference) | | Mass of Unit (kg) | |
|---|---|---|---|---|---|---|---|---|---|---|---|---|---|---|---|---|---|---|---|---|---|---|
| | | H | L | A | J | N | $H_1$ | $H_2$ | $B_1$ | S | $A_4$ | $A_6$ | | No. | Basic load rating (N) Cr | Basic load rating (N) Cor | | Covers with rubber seal (End cover on one side) | Cover with rubber seal | Side end cover | standard | with steel cover |
| 10 | **MUP000** | 18 | 67 | 16 | 53 | 7 | 6 | 35 | 17.5 | 4 | 33 | 2 | M 6 | MU000+ER | 3900 | 1550 | P000Z3 | **MUP000C(E)** | 000CP10 | 000CPE | 77 | 85 |
| 12 | **MUP001** | 19 | 71 | 16 | 56 | 7 | 6 | 38 | 17.5 | 4 | 33 | 2 | M 6 | MU001+ER | 4300 | 1900 | P001Z3 | **MUP001C(E)** | 001CP12 | 001CPE | 91 | 100 |
| 15 | **MUP002** | 22 | 80 | 16 | 63 | 7 | 7 | 43 | 18.5 | 4.5 | 34 | 2 | M 6 | MU002+ER | 4750 | 2250 | P002Z3 | **MUP002C(E)** | 002CP15 | 002CPE | 125 | 135 |
| 17 | **MUP003** | 24 | 85 | 18 | 67 | 7 | 7 | 47 | 20.5 | 5 | 38 | 2 | M 6 | MU003+ER | 5100 | 2650 | P003Z3 | **MUP003C(E)** | 003CP17 | 003CPE | 156 | 170 |
| 20 | **MUP004** | 28 | 100 | 20 | 80 | 10 | 9 | 55 | 24.5 | 6 | 46 | 3 | M 8 | MU004+ER | 7900 | 4000 | P04-5Z3 | **MUP004C(E)** | 04-5CP20 | 04-5CPE | 230 | 250 |
| 25 | **MUP005** | 32 | 112 | 20 | 90 | 10 | 10 | 62 | 25.5 | 6 | 47 | 3 | M 8 | MU005+ER | 8600 | 4650 | P05-6Z3 | **MUP005C(E)** | 05-6CP25 | 05-6CPE | 294 | 315 |
| 30 | **MUP006** | 36 | 132 | 26 | 106 | 13 | 11 | 70 | 26.5 | 6.5 | 50 | 4 | M10 | MU006+ER | 11300 | 6600 | P06-7Z3 | **MUP006C(E)** | 06-7CP30 | 06-7CPE | 454 | 480 |

Remark : Examples of unit numbers with covers: Covers with rubber seal on both sides :MUP005C
An end cover and a cover with rubber seal :MUP005E

# Pressed Steel Pillow Block Units

## BPP type

**With set screws**
**Cylindrical bore**
Shaft dia.: 12～35mm

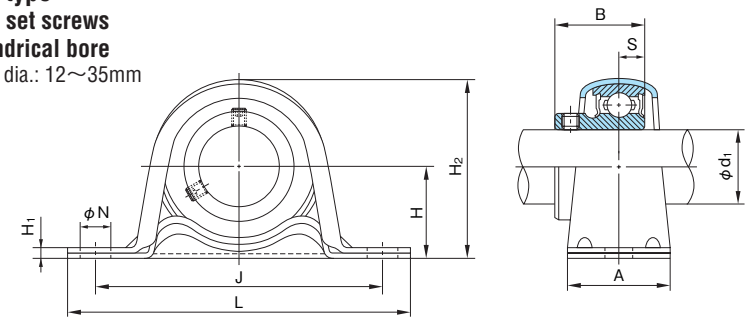


## KHPP type

**With eccentric collar**
**Cylindrical bore**
Shaft dia.: 12～35mm

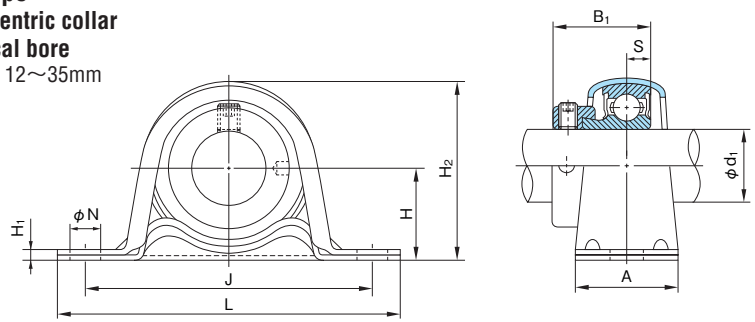


## BPP type

1N=0.102kgf

| Shaft dia. $d_1$ (mm) | Unit No. | Boundary dimensions (mm) | | | | | | | | | Bolt size | Bearings | | | Housing No. | Mass of Unit (kg) | Limiting load (N) | |
|---|---|---|---|---|---|---|---|---|---|---|---|---|---|---|---|---|---|---|
| | | H | L | A | J | N | $H_1$ | $H_2$ | B | S | | No. | Basic load rating (N) Cr | Basic load rating (N) Cor | | | Radial | Axial |
| 12 | BPP1 | 22.2 | 86 | 25 | 68 | 9.5 | 3.2 | 44 | 22 | 6 | M 8 | B1 | 9550 | 4800 | PP3 | 0.16 | 2150 | 830 |
| 15 | BPP2 | 22.2 | 86 | 25 | 68 | 9.5 | 3.2 | 44 | 22 | 6 | M 8 | B2 | 9550 | 4800 | PP3 | 0.15 | 2150 | 830 |
| 17 | BPP3 | 22.2 | 86 | 25 | 68 | 9.5 | 3.2 | 44 | 22 | 6 | M 8 | B3 | 9550 | 4800 | PP3 | 0.13 | 2150 | 830 |
| 20 | BPP4 | 25.4 | 98 | 32 | 76 | 9.5 | 3.2 | 50 | 24.7 | 7 | M 8 | B4 | 12800 | 6600 | PP4 | 0.21 | 2650 | 1030 |
| 25 | BPP5 | 28.6 | 108 | 32 | 86 | 11.5 | 4 | 56 | 27 | 7.5 | M10 | B5 | 14000 | 7900 | PP5 | 0.29 | 3700 | 1470 |
| 30 | BPP6 | 33.3 | 117 | 38 | 95 | 11.5 | 4 | 66 | 30.3 | 8 | M10 | B6 | 19600 | 11300 | PP6 | 0.42 | 4400 | 1670 |
| 35 | BPP7 | 39.7 | 129 | 42 | 106 | 11.5 | 4.6 | 78 | 32.9 | 8.5 | M10 | B7 | 25900 | 15400 | PP7 | 0.61 | 4900 | 1860 |

## KHPP type

1N=0.102kgf

| Shaft dia. $d_1$ (mm) | Unit No. | Boundary dimensions (mm) | | | | | | | | | Bolt size | Bearings | | | Housing No. | Mass of Unit (kg) | Limiting load (N) | |
|---|---|---|---|---|---|---|---|---|---|---|---|---|---|---|---|---|---|---|
| | | H | L | A | J | N | $H_1$ | $H_2$ | $B_1$ | S | | No. | Basic load rating (N) Cr | Basic load rating (N) Cor | | | Radial | Axial |
| 12 | KHPP201A | 22.2 | 86 | 25 | 68 | 9.5 | 3.2 | 44 | 28.6 | 6.5 | M 8 | KH201AE | 9550 | 4800 | PP3 | 0.18 | 2150 | 830 |
| 15 | KHPP202A | 22.2 | 86 | 25 | 68 | 9.5 | 3.2 | 44 | 28.6 | 6.5 | M 8 | KH202AE | 9550 | 4800 | PP3 | 0.17 | 2150 | 830 |
| 17 | KHPP203A | 22.2 | 86 | 25 | 68 | 9.5 | 3.2 | 44 | 28.6 | 6.5 | M 8 | KH203AE | 9550 | 4800 | PP3 | 0.16 | 2150 | 830 |
| 20 | KHPP204A | 25.4 | 98 | 32 | 76 | 9.5 | 3.2 | 50 | 31 | 7.5 | M 8 | KH204AE | 12800 | 6600 | PP4 | 0.25 | 2650 | 1030 |
| 25 | KHPP205A | 28.6 | 108 | 32 | 86 | 11.5 | 4 | 56 | 31 | 7.5 | M10 | KH205AE | 14000 | 7900 | PP5 | 0.33 | 3700 | 1470 |
| 30 | KHPP206A | 33.3 | 117 | 38 | 95 | 11.5 | 4 | 66 | 35.7 | 9 | M10 | KH206AE | 19600 | 11300 | PP6 | 0.48 | 4400 | 1670 |
| 35 | KHPP207A | 39.7 | 129 | 42 | 106 | 11.5 | 4.6 | 78 | 38.9 | 9.5 | M10 | KH207AE | 25900 | 15400 | PP7 | 0.72 | 4900 | 1860 |

# Square Flange Units

## UCF type

### With set screws

### Cylindrical bore

Shaft dia.: 12～60mm

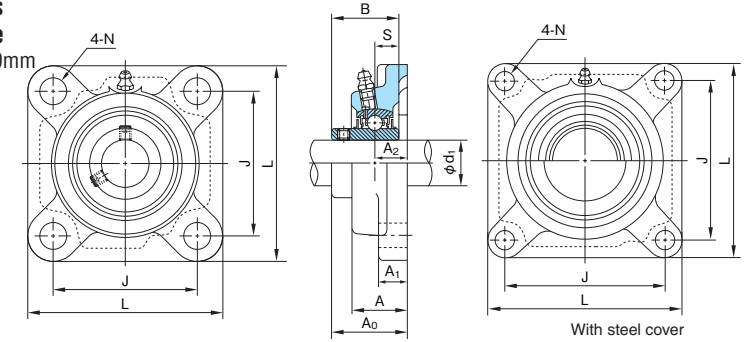


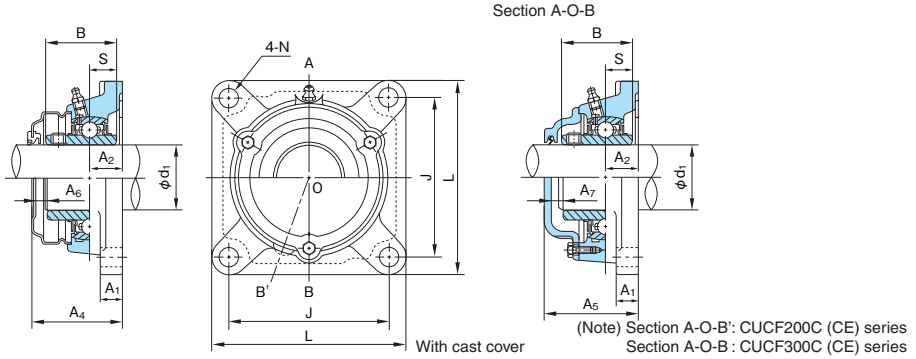


(Note) Section A-O-B': CUCF200C (CE) series
Section A-O-B : CUCF300C (CE) series

1N=0.102kgf

| Shaft dia. $d_1$ (mm) | Unit No. | Boundary dimensions (mm) | | | | | | | | | | | | | Bolt size | Bearings | | | Housing No. | Unit No. with steel cover | Unit No. with cast cover | Mass of Unit (kg) | | |
|---|---|---|---|---|---|---|---|---|---|---|---|---|---|---|---|---|---|---|---|---|---|---|---|---|
| | | L | A | J | N | $A_1$ | $A_2$ | $A_0$ | B | S | $A_4$ | $A_5$ | $A_6$ | $A_7$ | | No. | Basic load rating (N) Cr | Basic load rating (N) Cor | | Cover with rubber seal (End cover) | Cover with rubber seal (End cover) | standard | with steel cover | with cast cover |
| 12 | UCF201 | 86 | 25.5 | 64 | 12 | 12 | 15 | 33.3 | 31 | 12.7 | 43 | 46 | 8 | 6 | M10 | UC201 | 12800 | 6600 | F204 | UCF201C(E) | CUCF201C(CE) | 0.64 | 0.67 | 1.0 |
| 15 | UCF202 | 86 | 25.5 | 64 | 12 | 12 | 15 | 33.3 | 31 | 12.7 | 43 | 46 | 8 | 6 | M10 | UC202 | 12800 | 6600 | F204 | UCF202C(E) | CUCF202C(CE) | 0.62 | 0.65 | 1.0 |
| 17 | UCF203 | 86 | 25.5 | 64 | 12 | 12 | 15 | 33.3 | 31 | 12.7 | 43 | 46 | 8 | 6 | M10 | UC203 | 12800 | 6600 | F204 | UCF203C(E) | CUCF203C(CE) | 0.61 | 0.64 | 1.0 |
| 20 | UCF204 | 86 | 25.5 | 64 | 12 | 12 | 15 | 33.3 | 31 | 12.7 | 43 | 46 | 8 | 6 | M10 | UC204 | 12800 | 6600 | F204 | UCF204C(E) | CUCF204C(CE) | 0.59 | 0.62 | 1.0 |
| | UCF205 | 95 | 27 | 70 | 12 | 14 | 16 | 35.7 | 34 | 14.3 | 48 | 51 | 11 | 9 | M10 | UC205 | 14000 | 7900 | F205 | UCF205C(E) | CUCF205C(CE) | 0.82 | 0.86 | 1.2 |
| 25 | UCFX05 | 108 | 30 | 83 | 12 | 13 | 18 | 40.2 | 38.1 | 15.9 | 51 | — | 9 | — | M10 | UCX05 | 19600 | 11300 | FX05 | UCFX05C(E) | — | 1.1 | 1.2 | — |
| | UCF305 | 110 | 29 | 80 | 16 | 13 | 16 | 39 | 38 | 15 | — | 55 | — | 10 | M14 | UC305 | 21300 | 10900 | F305 | — | CUCF305C(CE) | 1.2 | — | 1.6 |
| | UCF206 | 108 | 31 | 83 | 12 | 14 | 18 | 40.2 | 38.1 | 15.9 | 51 | 55 | 9 | 8 | M10 | UC206 | 19600 | 11300 | F206 | UCF206C(E) | CUCF206C(CE) | 1.1 | 1.2 | 1.6 |
| 30 | UCFX06 | 117 | 34 | 92 | 16 | 14 | 19 | 44.4 | 42.9 | 17.5 | 54 | — | 8 | — | M14 | UCX06 | 25900 | 15400 | FX06 | UCFX06C(E) | — | 1.3 | 1.3 | — |
| | UCF306 | 125 | 32 | 95 | 16 | 15 | 18 | 44 | 43 | 17 | — | 60 | — | 10 | M14 | UC306 | 26800 | 15000 | F306 | — | CUCF306C(CE) | 1.7 | — | 2.1 |
| | UCF207 | 117 | 34 | 92 | 14 | 16 | 19 | 44.4 | 42.9 | 17.5 | 54 | 59 | 8 | 8 | M12 | UC207 | 25900 | 15400 | F207 | UCF207C(E) | CUCF207C(CE) | 1.5 | 1.6 | 2.1 |
| 35 | UCFX07 | 130 | 38 | 102 | 16 | 14 | 21 | 51.2 | 49.2 | 19 | 63 | — | 10 | — | M14 | UCX07 | 29300 | 17900 | FX07 | UCFX07C(E) | — | 1.8 | 1.8 | — |
| | UCF307 | 135 | 36 | 100 | 19 | 16 | 20 | 49 | 48 | 19 | — | 65 | — | 10 | M16 | UC307 | 33500 | 19200 | F307 | — | CUCF307C(CE) | 2.1 | — | 2.6 |
| | UCF208 | 130 | 36 | 102 | 16 | 16 | 21 | 51.2 | 49.2 | 19 | 62 | 66 | 10 | 8 | M14 | UC208 | 29300 | 17900 | F208 | UCF208C(E) | CUCF208C(CE) | 2.0 | 2.1 | 2.7 |
| 40 | UCFX08 | 137 | 40 | 105 | 19 | 14 | 22 | 52.2 | 49.2 | 19 | 63 | — | 10 | — | M16 | UCX08 | 33000 | 20500 | FX08 | UCFX08C(E) | — | 1.8 | 1.8 | — |
| | UCF308 | 150 | 40 | 112 | 19 | 17 | 23 | 56 | 52 | 19 | — | 73 | — | 11 | M16 | UC308 | 40500 | 23900 | F308 | — | CUCF308C(CE) | 2.9 | — | 3.4 |
| | UCF209 | 137 | 38 | 105 | 16 | 18 | 22 | 52.2 | 49.2 | 19 | 63 | 67 | 10 | 8 | M14 | UC209 | 33000 | 20500 | F209 | UCF209C(E) | CUCF209C(CE) | 2.4 | 2.5 | 3.1 |
| 45 | UCFX09 | 143 | 40 | 111 | 19 | 14 | 23 | 55.6 | 51.6 | 19 | 67 | — | 9 | — | M16 | UCX09 | 35500 | 23200 | FX09 | UCFX09C(E) | — | 2.4 | 2.5 | — |
| | UCF309 | 160 | 44 | 125 | 19 | 18 | 25 | 60 | 57 | 22 | — | 78 | — | 12 | M16 | UC309 | 51500 | 29500 | F309 | — | CUCF309C(CE) | 3.6 | — | 4.3 |
| | UCF210 | 143 | 40 | 111 | 16 | 18 | 22 | 54.6 | 51.6 | 19 | 66 | 71 | 9 | 10 | M14 | UC210 | 35500 | 23200 | F210 | UCF210C(E) | CUCF210C(CE) | 2.5 | 2.6 | 3.6 |
| 50 | UCFX10 | 162 | 44 | 130 | 19 | 20 | 26 | 59.4 | 55.6 | 22.2 | 70 | — | 9 | — | M16 | UCX10 | 43000 | 29400 | FX10 | UCFX10C(E) | — | 3.6 | 3.7 | — |
| | UCF310 | 175 | 48 | 132 | 23 | 19 | 28 | 67 | 61 | 22 | — | 85 | — | 12 | M20 | UC310 | 61500 | 38200 | F310 | — | CUCF310C(CE) | 4.7 | — | 5.5 |
| | UCF211 | 162 | 43 | 130 | 19 | 20 | 25 | 58.4 | 55.6 | 22.2 | 69 | 75 | 9 | 10 | M16 | UC211 | 43000 | 29400 | F211 | UCF211C(E) | CUCF211C(CE) | 3.4 | 3.6 | 4.6 |
| 55 | UCFX11 | 175 | 49 | 143 | 19 | 20 | 29 | 68.7 | 65.1 | 25.4 | 79 | — | 9 | — | M16 | UCX11 | 52500 | 36100 | FX11 | UCFX11C(E) | — | 4.5 | 4.6 | — |
| | UCF311 | 185 | 52 | 140 | 23 | 20 | 30 | 71 | 66 | 25 | — | 90 | — | 13 | M20 | UC311 | 71500 | 44800 | F311 | — | CUCF311C(CE) | 5.7 | — | 6.7 |
| | UCF212 | 175 | 48 | 143 | 19 | 20 | 29 | 68.7 | 65.1 | 25.4 | 80 | 86 | 10 | 11 | M16 | UC212 | 52500 | 36100 | F212 | UCF212C(E) | CUCF212C(CE) | 4.6 | 4.8 | 5.9 |
| 60 | UCFX12 | 187 | 59 | 149 | 19 | 21 | 34 | 73.7 | 65.1 | 25.4 | 86 | — | 11 | — | M16 | UCX12 | 57500 | 40000 | FX12 | UCFX12C(E) | — | 5.3 | 5.5 | — |
| | UCF312 | 195 | 56 | 150 | 23 | 22 | 33 | 78 | 71 | 26 | — | 98 | — | 14 | M20 | UC312 | 81500 | 52000 | F312 | — | CUCF312C(CE) | 6.8 | — | 7.7 |

Remarks: 1. Grease nipple :1/4-28UNF

Remarks: 2. Examples of unit numbers with cover:

With steel cover { Cover with rubber seal :UCF210C
End cover :UCF210E

With cast cover { Cover with rubber seal :CUCF210C
End cover :CUCF210CE

# Square Flange Units

## UCF type

### With set screws

### Cylindrical bore

Shaft dia.:
65～140mm

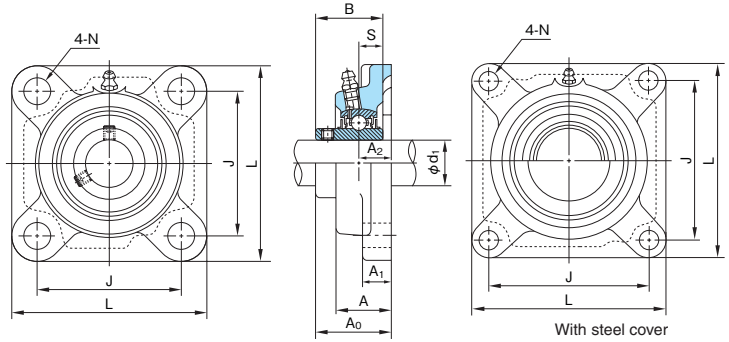


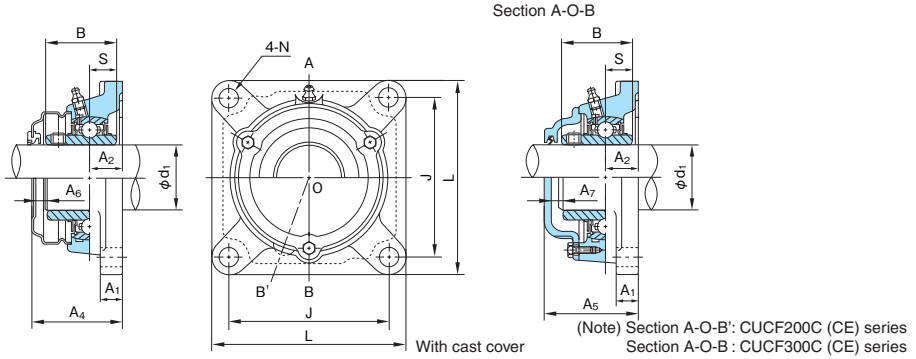


(Note) Section A-O-B': CUCF200C (CE) series
Section A-O-B : CUCF300C (CE) series

1N=0.102kgf

| Shaft dia. $d_1$ (mm) | Unit No. | Boundary dimensions (mm) | | | | | | | | | | | | | Bolt size | Bearings | | | Housing No. | Unit No. with steel cover | Unit No. with cast cover | Mass of Unit (kg) | | |
|---|---|---|---|---|---|---|---|---|---|---|---|---|---|---|---|---|---|---|---|---|---|---|---|---|
| | | L | A | J | N | $A_1$ | $A_2$ | $A_0$ | B | S | $A_4$ | $A_5$ | $A_6$ | $A_7$ | | No. | Basic load rating (N) Cr | Basic load rating (N) Cor | | Cover with rubber seal (End cover) | Cover with rubber seal (End cover) | standard | With steel cover | With cast cover |
| 65 | **UCF213** | 187 | 50 | 149 | 19 | 20 | 30 | 69.7 | 65.1 | 25.4 | 81 | 89 | 10 | 13 | M16 | UC213 | 57500 | 40000 | F213 | **UCF213C(E)** | **CUCF213C(CE)** | 5.5 | 5.8 | 7.1 |
| | **UCFX13** | 187 | 59 | 149 | 19 | 21 | 34 | 78.4 | 74.6 | 30.2 | — | — | — | — | M16 | UCX13 | 62000 | 44000 | FX13 | — | — | 5.5 | — | — |
| | **UCF313** | 208 | 58 | 166 | 23 | 22 | 33 | 78 | 75 | 30 | — | 103 | — | 17 | M20 | UC313 | 92500 | 59700 | F313 | — | **CUCF313C(CE)** | 7.8 | — | 11.5 |
| 70 | **UCF214** | 193 | 54 | 152 | 19 | 24 | 31 | 75.4 | 74.6 | 30.2 | — | 98 | — | 16 | M16 | UC214 | 62000 | 44000 | F214 | — | **CUCF214C(CE)** | 6.1 | — | 7.8 |
| | **UCFX14** | 197 | 60 | 152 | 23 | 24 | 37 | 81.5 | 77.8 | 33.3 | — | — | — | — | M20 | UCX14 | 66000 | 48200 | FX14 | — | — | 7.7 | — | — |
| | **UCF314** | 226 | 61 | 178 | 25 | 25 | 36 | 81 | 78 | 33 | — | 106 | — | 17 | M22 | UC314 | 104000 | 68000 | F314 | — | **CUCF314C(CE)** | 9.6 | — | 12.1 |
| 75 | **UCF215** | 200 | 56 | 159 | 19 | 24 | 34 | 78.5 | 77.8 | 33.3 | — | 102 | — | 17 | M16 | UC215 | 66000 | 48200 | F215 | — | **CUCF215C(CE)** | 6.9 | — | 8.6 |
| | **UCFX15** | 197 | 68 | 152 | 23 | 24 | 40 | 89.3 | 82.6 | 33.3 | — | — | — | — | M20 | UCX15 | 72500 | 53000 | FX15 | — | — | 7.7 | — | — |
| | **UCF315** | 236 | 66 | 184 | 25 | 25 | 39 | 89 | 82 | 32 | — | 114 | — | 17 | M22 | UC315 | 114000 | 76900 | F315 | — | **CUCF315C(CE)** | 11.7 | — | 13.6 |
| 80 | **UCF216** | 208 | 58 | 165 | 23 | 24 | 34 | 83.3 | 82.6 | 33.3 | — | 107 | — | 15 | M20 | UC216 | 72500 | 53000 | F216 | — | **CUCF216C(CE)** | 7.8 | — | 10.0 |
| | **UCFX16** | 214 | 70 | 171 | 23 | 24 | 40 | 91.6 | 85.7 | 34.1 | — | — | — | — | M20 | UCX16 | 83500 | 61800 | FX16 | — | — | 10.2 | — | — |
| | **UCF316** | 250 | 68 | 196 | 31 | 27 | 38 | 90 | 86 | 34 | — | 115 | — | 17 | M27 | UC316 | 123000 | 86400 | F316 | — | **CUCF316C(CE)** | 13.7 | — | 15.9 |
| 85 | **UCF217** | 220 | 63 | 175 | 23 | 26 | 36 | 87.6 | 85.7 | 34.1 | — | 111 | — | 15 | M20 | UC217 | 83500 | 61800 | F217 | — | **CUCF217C(CE)** | 9.3 | — | 11.8 |
| | **UCFX17** | 214 | 70 | 171 | 23 | 24 | 40 | 96.3 | 96 | 39.7 | — | — | — | — | M20 | UCX17 | 95500 | 71400 | FX17 | — | — | 10.2 | — | — |
| | **UCF317** | 260 | 74 | 204 | 31 | 27 | 44 | 100 | 96 | 40 | — | 126 | — | 18 | M27 | UC317 | 132000 | 96500 | F317 | — | **CUCF317C(CE)** | 15.2 | — | 18.4 |
| 90 | **UCF218** | 235 | 68 | 187 | 23 | 26 | 40 | 96.3 | 96 | 39.7 | — | 122 | — | 17 | M20 | UC218 | 95500 | 71400 | F218 | — | **CUCF218C(CE)** | 11.3 | — | 14.9 |
| | **UCFX18** | 214 | 76 | 171 | 23 | 24 | 45 | 106.1 | 104 | 42.9 | — | — | — | — | M20 | UCX18 | 109000 | 81600 | FX18 | — | — | 10.6 | — | — |
| | **UCF318** | 280 | 76 | 216 | 35 | 30 | 44 | 100 | 96 | 40 | — | 128 | — | 20 | M30 | UC318 | 143000 | 107200 | F318 | — | **CUCF318C(CE)** | 18.8 | — | 21.5 |
| 95 | **UCF319** | 290 | 94 | 228 | 35 | 30 | 59 | 121 | 103 | 41 | — | 149 | — | 20 | M30 | UC319 | 153000 | 118400 | F319 | — | **CUCF319C(CE)** | 20.7 | — | 24.2 |
| 100 | **UCFX20** | 268 | 97 | 211 | 31 | 31 | 59 | 127.3 | 117.5 | 49.2 | — | — | — | — | M27 | UCX20 | 134000 | 104700 | FX20 | — | — | 16.8 | — | — |
| | **UCF320** | 310 | 94 | 242 | 38 | 32 | 59 | 125 | 108 | 42 | — | 154 | — | 21 | M33 | UC320 | 173000 | 140400 | F320 | — | **CUCF320C(CE)** | 24.8 | — | 29.6 |
| 105 | **UCF321** | 310 | 94 | 242 | 38 | 32 | 59 | 127 | 112 | 44 | — | 156 | — | 21 | M33 | UC321 | 183000 | 153100 | F321 | — | **CUCF321C(CE)** | 25.6 | — | 32.2 |
| 110 | **UCF322** | 340 | 96 | 266 | 41 | 35 | 60 | 131 | 117 | 46 | — | 165 | — | 26 | M36 | UC322 | 205000 | 178800 | F322 | — | **CUCF322C(CE)** | 34.7 | — | 38.7 |
| 120 | **UCF324** | 370 | 110 | 290 | 41 | 40 | 65 | 140 | 126 | 51 | — | 175 | — | 25 | M36 | UC324 | 207000 | 184800 | F324 | — | **CUCF324C(CE)** | 47.2 | — | 52.3 |
| 130 | **UCF326** | 410 | 115 | 320 | 41 | 45 | 65 | 146 | 135 | 54 | — | 180 | — | 24 | M36 | UC326 | 229000 | 214300 | F326 | — | **CUCF326C(CE)** | 62.7 | — | 67.3 |
| 140 | **UCF328** | 450 | 125 | 350 | 41 | 55 | 75 | 161 | 145 | 59 | — | 195 | — | 24 | M36 | UC328 | 255000 | 246000 | F328 | — | **CUCF328C(CE)** | 87.0 | — | 89.4 |

Remarks: 1. Grease nipple : 1/4-28UNF for bore number 13 and under
PF1/8 for bore number 14 and over

Remarks: 2. Examples of unit numbers with cover:
With steel cover { Cover with rubber seal :UCF213C
End cover :UCF213E
With cast cover { Cover with rubber seal :CUCF213C
End cover :CUCF213CE

# Square Flange Units

## UKF+H type

### With adapter assembly

### Tapered bore

Shaft dia.:
20～60mm

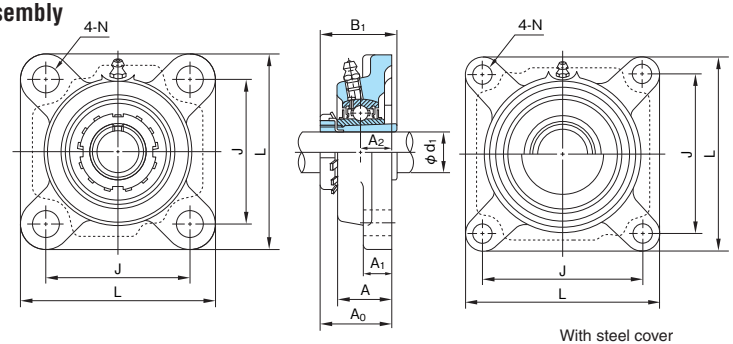


With steel cover

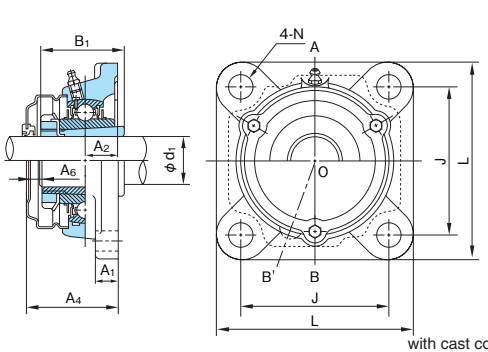


with cast cover

Section A-O-B

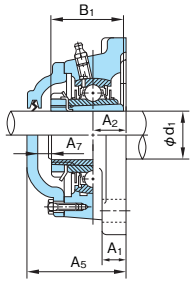


(Note) Section A-O-B': CUKF200C (CE) series+H series
Section A-O-B : CUKF300C (CE) series+H series

1N=0.102kgf

| Shaft dia. $d_1$ (mm) | Unit No. | Boundary dimensions (mm) | | | | | | | | | | | | Bolt size | Bearings | | | Housing No. | Unit No. with steel cover | Unit No. with cast cover | Mass of Unit (kg) | | |
|---|---|---|---|---|---|---|---|---|---|---|---|---|---|---|---|---|---|---|---|---|---|---|---|
| | | L | A | J | N | $A_1$ | $A_2$ | $A_0$ | $B_1$ | $A_4$ | $A_5$ | $A_6$ | $A_7$ | | No. | Basic load rating (N) Cr | Basic load rating (N) Cor | | Cover with rubber seal (End cover) | Cover with rubber seal (End cover) | standard | With steel cover | with cast cover |
| 20 | **UKF205+H2305** | 95 | 27 | 70 | 12 | 14 | 16 | 35.5 | 35 | 48 | 51 | 11 | 9 | M10 | UK205+H2305 | 14000 | 7900 | F205 | **UKF205C(E)+H2305** | **CUKF205C(CE)+H2305** | 0.87 | 0.91 | 1.3 |
| | **UKFX05+H2305** | 108 | 30 | 83 | 12 | 13 | 18 | 39 | 35 | 51 | — | 10 | — | M10 | UKX05+H2305 | 19600 | 11300 | FX05 | **UKFX05C(E)+H2305** | — | 1.1 | 1.2 | — |
| | **UKF305+H2305** | 110 | 29 | 80 | 16 | 13 | 16 | 37 | 35 | — | 55 | — | 12 | M14 | UK305+H2305 | 21300 | 10900 | F305 | — | **CUKF305C(CE)+H2305** | 1.2 | — | 1.7 |
| 25 | **UKF206+H2306** | 108 | 31 | 83 | 12 | 14 | 18 | 39 | 38 | 51 | 55 | 10 | 10 | M10 | UK206+H2306 | 19600 | 11300 | F206 | **UKF206C(E)+H2306** | **CUKF206C(CE)+H2306** | 1.2 | 1.3 | 1.7 |
| | **UKFX06+H2306** | 117 | 34 | 92 | 16 | 14 | 19 | 40.5 | 38 | 54 | — | 12 | — | M14 | UKX06+H2306 | 25900 | 15400 | FX06 | **UKFX06C(E)+H2306** | — | 1.4 | 1.4 | — |
| | **UKF306+H2306** | 125 | 32 | 95 | 16 | 15 | 18 | 40.5 | 38 | — | 60 | — | 13 | M14 | UK306+H2306 | 26800 | 15000 | F306 | — | **CUKF306C(CE)+H2306** | 1.7 | — | 2.2 |
| 30 | **UKF207+H2307** | 117 | 34 | 92 | 14 | 16 | 19 | 41.5 | 43 | 54 | 59 | 11 | 11 | M12 | UK207+H2307 | 25900 | 15400 | F207 | **UKF207C(E)+H2307** | **CUKF207C(CE)+H2307** | 1.5 | 1.7 | 2.2 |
| | **UKFX07+H2307** | 130 | 38 | 102 | 16 | 14 | 21 | 44.5 | 43 | 63 | — | 17 | — | M14 | UKX07+H2307 | 29300 | 17900 | FX07 | **UKFX07C(E)+H2307** | — | 1.8 | 1.8 | — |
| | **UKF307+H2307** | 135 | 36 | 100 | 19 | 16 | 20 | 44.5 | 43 | — | 65 | — | 14 | M16 | UK307+H2307 | 33500 | 19200 | F307 | — | **CUKF307C(CE)+H2307** | 2.1 | — | 2.7 |
| 35 | **UKF208+H2308** | 130 | 36 | 102 | 16 | 16 | 21 | 45.5 | 46 | 62 | 66 | 15 | 14 | M14 | UK208+H2308 | 29300 | 17900 | F208 | **UKF208C(E)+H2308** | **CUKF208C(CE)+H2308** | 2.1 | 2.2 | 2.8 |
| | **UKFX08+H2308** | 137 | 40 | 105 | 19 | 14 | 22 | 47 | 46 | 63 | — | 15 | — | M16 | UKX08+H2308 | 33000 | 20500 | FX08 | **UKFX08C(E)+H2308** | — | 1.8 | 1.8 | — |
| | **UKF308+H2308** | 150 | 40 | 112 | 19 | 17 | 23 | 50 | 46 | — | 73 | — | 17 | M16 | UK308+H2308 | 40500 | 23900 | F308 | — | **CUKF308C(CE)+H2308** | 3.0 | — | 3.5 |
| 40 | **UKF209+H2309** | 137 | 38 | 105 | 16 | 18 | 22 | 48 | 50 | 63 | 67 | 14 | 13 | M14 | UK209+H2309 | 33000 | 20500 | F209 | **UKF209C(E)+H2309** | **CUKF209C(CE)+H2309** | 2.5 | 2.6 | 3.2 |
| | **UKFX09+H2309** | 143 | 40 | 111 | 19 | 14 | 23 | 49.5 | 50 | 67 | — | 16 | — | M16 | UKX09+H2309 | 35500 | 23200 | FX09 | **UKFX09C(E)+H2309** | — | 2.4 | 2.5 | — |
| | **UKF309+H2309** | 160 | 44 | 125 | 19 | 18 | 25 | 54.5 | 50 | — | 78 | — | 17 | M16 | UK309+H2309 | 51500 | 29500 | F309 | — | **CUKF309C(CE)+H2309** | 3.6 | — | 4.4 |
| 45 | **UKF210+H2310** | 143 | 40 | 111 | 16 | 18 | 22 | 49.5 | 55 | 66 | 71 | 15 | 15 | M14 | UK210+H2310 | 35500 | 23200 | F210 | **UKF210C(E)+H2310** | **CUKF210C(CE)+H2310** | 2.7 | 2.8 | 3.8 |
| | **UKFX10+H2310** | 162 | 44 | 130 | 19 | 20 | 26 | 54.5 | 55 | 70 | — | 14 | — | M16 | UKX10+H2310 | 43000 | 29400 | FX10 | **UKFX10C(E)+H2310** | — | 3.6 | 3.7 | — |
| | **UKF310+H2310** | 175 | 48 | 132 | 23 | 19 | 28 | 60 | 55 | — | 85 | — | 19 | M20 | UK310+H2310 | 61500 | 38200 | F310 | — | **CUKF310C(CE)+H2310** | 4.8 | — | 5.8 |
| 50 | **UKF211+H2311** | 162 | 43 | 130 | 19 | 20 | 25 | 53.5 | 59 | 69 | 75 | 14 | 15 | M16 | UK211+H2311 | 43000 | 29400 | F211 | **UKF211C(E)+H2311** | **CUKF211C(CE)+H2311** | 3.6 | 3.8 | 4.8 |
| | **UKFX11+H2311** | 175 | 49 | 143 | 19 | 20 | 29 | 59 | 59 | 79 | — | 19 | — | M16 | UKX11+H2311 | 52500 | 36100 | FX11 | **UKFX11C(E)+H2311** | — | 4.3 | 4.4 | — |
| | **UKF311+H2311** | 185 | 52 | 140 | 23 | 20 | 30 | 63.5 | 59 | — | 90 | — | 20 | M20 | UK311+H2311 | 71500 | 44800 | F311 | — | **CUKF311C(CE)+H2311** | 5.7 | — | 6.8 |
| 55 | **UKF212+H2312** | 175 | 48 | 143 | 19 | 20 | 29 | 60 | 62 | 80 | 86 | 19 | 20 | M16 | UK212+H2312 | 52500 | 36100 | F212 | **UKF212C(E)+H2312** | **CUKF212C(CE)+H2312** | 4.6 | 4.9 | 6.0 |
| | **UKFX12+H2312** | 187 | 59 | 149 | 19 | 21 | 34 | 66 | 62 | 86 | — | 19 | — | M16 | UKX12+H2312 | 57500 | 40000 | FX12 | **UKFX12C(E)+H2312** | — | 5.3 | 5.4 | — |
| | **UKF312+H2312** | 195 | 56 | 150 | 23 | 22 | 33 | 69 | 62 | — | 98 | — | 23 | M20 | UK312+H2312 | 81500 | 52000 | F312 | — | **CUKF312C(CE)+H2312** | 6.7 | — | 7.8 |
| 60 | **UKF213+H2313** | 187 | 50 | 149 | 19 | 20 | 30 | 63 | 65 | 81 | 89 | 17 | 20 | M16 | UK213+H2313 | 57500 | 40000 | F213 | **UKF213C(E)+H2313** | **CUKF213C(CE)+H2313** | 5.7 | 6.0 | 7.2 |
| | **UKFX13+H2313** | 187 | 59 | 149 | 19 | 21 | 34 | 68 | 65 | — | — | — | — | M16 | UKX13+H2313 | 62000 | 44000 | FX13 | — | — | 5.2 | — | — |
| | **UKF313+H2313** | 208 | 58 | 166 | 23 | 22 | 33 | 71 | 65 | — | 103 | — | 24 | M20 | UK313+H2313 | 92500 | 59700 | F313 | — | **CUKF313C(CE)+H2313** | 7.7 | — | 11.5 |

Remarks: 1. Grease nipple: 1/4-28UNF

Remarks: 2. Examples of unit numbers with cover:

With steel cover { Cover with rubber seal :UKF210C+H2310
End cover :UKF210E+H2310

with cast cover { Cover with rubber seal :CUKF210C+H2310
End cover :CUKF210CE+H2310

# Square Flange Units

## UKF+H type

### With adapter assembly

### Tapered bore

Shaft dia.:
65～125mm

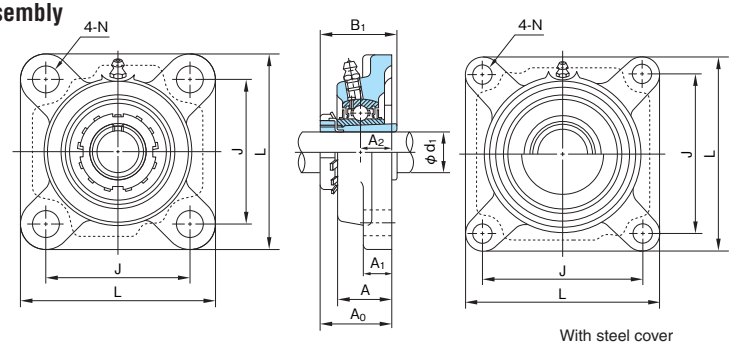


With steel cover

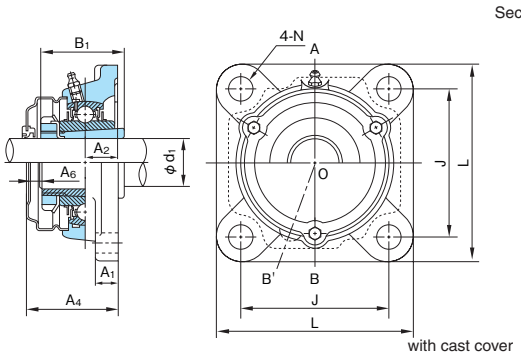


with cast cover

Section A-O-B

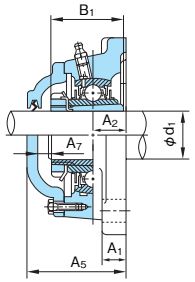


(Note) Section A-O-B': CUKF200C (CE) series+H series
Section A-O-B : CUKF300C (CE) series+H series

1N=0.102kgf

| Shaft dia. $d_1$ (mm) | Unit No. | Boundary dimensions (mm) | | | | | | | | | | | | Bolt size | Bearings | | | Housing No. | Unit No. with steel cover | Unit No. with cast cover | Mass of Unit (kg) | | |
|---|---|---|---|---|---|---|---|---|---|---|---|---|---|---|---|---|---|---|---|---|---|---|---|
| | | L | A | J | N | $A_1$ | $A_2$ | $A_0$ | $B_1$ | $A_4$ | $A_5$ | $A_6$ | $A_7$ | | No. | Basic load rating (N) Cr | Basic load rating (N) Cor | | Cover with rubber seal (End cover) | Cover with rubber seal (End cover) | standard | With steel cover | with cast cover |
| 65 | **UKF215+H2315** | 200 | 56 | 159 | 19 | 24 | 34 | 69.5 | 73 | — | 102 | — | 26 | M16 | UK215+H2315 | 66000 | 48200 | F215 | — | **CUKF215C(CE)+H2315** | 7.3 | — | 9.0 |
| | **UKFX15+H2315** | 197 | 68 | 152 | 23 | 24 | 40 | 77 | 73 | — | — | — | — | M20 | UKX15+H2315 | 72500 | 53000 | FX15 | — | — | 7.7 | — | — |
| | **UKF315+H2315** | 236 | 66 | 184 | 25 | 25 | 39 | 81 | 73 | — | 114 | — | 25 | M22 | UK315+H2315 | 114000 | 76900 | F315 | — | **CUKF315C(CE)+H2315** | 11.8 | — | 14.0 |
| 70 | **UKF216+H2316** | 208 | 58 | 165 | 23 | 24 | 34 | 73 | 78 | — | 107 | — | 26 | M20 | UK216+H2316 | 72500 | 53000 | F216 | — | **CUKF216C(CE)+H2316** | 8.2 | — | 10.4 |
| | **UKFX16+H2316** | 214 | 70 | 171 | 23 | 24 | 40 | 80 | 78 | — | — | — | — | M20 | UKX16+H2316 | 83500 | 61800 | FX16 | — | — | 10.2 | — | — |
| | **UKF316+H2316** | 250 | 68 | 196 | 31 | 27 | 38 | 83.5 | 78 | — | 115 | — | 23 | M27 | UK316+H2316 | 123000 | 86400 | F316 | — | **CUKF316C(CE)+H2316** | 13.9 | — | 16.3 |
| 75 | **UKF217+H2317** | 220 | 63 | 175 | 23 | 26 | 36 | 77 | 82 | — | 111 | — | 26 | M20 | UK217+H2317 | 83500 | 61800 | F217 | — | **CUKF217C(CE)+H2317** | 9.8 | — | 12.4 |
| | **UKFX17+H2317** | 214 | 70 | 171 | 23 | 24 | 40 | 82.5 | 82 | — | — | — | — | M20 | UKX17+H2317 | 95500 | 71400 | FX17 | — | — | 10.1 | — | — |
| | **UKF317+H2317** | 260 | 74 | 204 | 31 | 27 | 44 | 92 | 82 | — | 126 | — | 26 | M27 | UK317+H2317 | 132000 | 96500 | F317 | — | **CUKF317C(CE)+H2317** | 15.1 | — | 18.6 |
| 80 | **UKF218+H2318** | 235 | 68 | 187 | 23 | 26 | 40 | 82.5 | 86 | — | 122 | — | 31 | M20 | UK218+H2318 | 95500 | 71400 | F218 | — | **CUKF218C(CE)+H2318** | 11.7 | — | 15.3 |
| | **UKFX18+H2318** | 214 | 76 | 171 | 23 | 24 | 45 | 89 | 86 | — | — | — | — | M20 | UKX18+H2318 | 109000 | 81600 | FX18 | — | — | 10.2 | — | — |
| | **UKF318+H2318** | 280 | 76 | 216 | 35 | 30 | 44 | 93.5 | 86 | — | 128 | — | 26 | M30 | UK318+H2318 | 143000 | 107200 | F318 | — | **CUKF318C(CE)+H2318** | 19.0 | — | 22.5 |
| 85 | **UKF319+H2319** | 290 | 94 | 228 | 35 | 30 | 59 | 111 | 90 | — | 149 | — | 30 | M30 | UK319+H2319 | 153000 | 118400 | F319 | — | **CUKF319C(CE)+H2319** | 20.8 | — | 24.4 |
| 90 | **UKFX20+H2320** | 268 | 97 | 211 | 31 | 31 | 59 | 108 | 97 | — | — | — | — | M27 | UKX20+H2320 | 134000 | 104700 | FX20 | — | — | 15.9 | — | — |
| | **UKF320+H2320** | 310 | 94 | 242 | 38 | 32 | 59 | 115 | 97 | — | 154 | — | 31 | M33 | UK320+H2320 | 173000 | 140400 | F320 | — | **CUKF320C(CE)+H2320** | 24.8 | — | 30.2 |
| 100 | **UKF322+H2322** | 340 | 96 | 266 | 41 | 35 | 60 | 121 | 105 | — | 165 | — | 36 | M36 | UK322+H2322 | 205000 | 178800 | F322 | — | **CUKF322C(CE)+H2322** | 34.8 | — | 39.4 |
| 110 | **UKF324+H2324** | 370 | 110 | 290 | 41 | 40 | 65 | 130 | 112 | — | 175 | — | 35 | M36 | UK324+H2324 | 207000 | 184800 | F324 | — | **CUKF324C(CE)+H2324** | 46.7 | — | 52.5 |
| 115 | **UKF326+H2326** | 410 | 115 | 320 | 41 | 45 | 65 | 134 | 121 | — | 180 | — | 36 | M36 | UK326+H2326 | 229000 | 214300 | F326 | — | **CUKF326C(CE)+H2326** | 63.0 | — | 68.8 |
| 125 | **UKF328+H2328** | 450 | 125 | 350 | 41 | 55 | 75 | 148 | 131 | — | 195 | — | 37 | M36 | UK328+H2328 | 255000 | 246000 | F328 | — | **CUKF328C(CE)+H2328** | 87.3 | — | 90.9 |

Remarks: 1. Grease nipple : PF1/8

Remarks: 2. Examples of unit numbers with cover:
With cast cover { Cover with rubber seal :CUKF215C+H2315
End cover :CUKF215CE+H2315

NACHI

# Square Flange Units

## BF type

**With set screws**

**Cylindrical bore**

Shaft dia.: 20～35mm

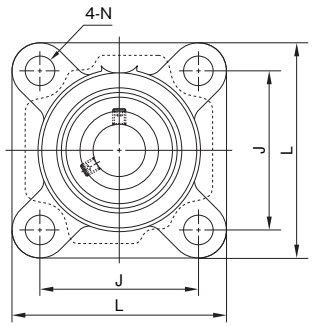


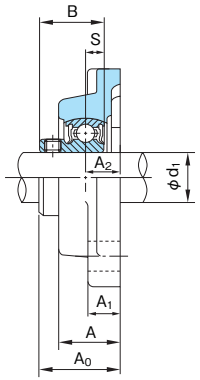


1N=0.102kgf

| Shaft dia. $d_1$ (mm) | Unit No. | Boundary dimensions (mm) | | | | | | | | | Bolt size | | Bearings | | | Housing No. | Mass of Unit (kg) |
|---|---|---|---|---|---|---|---|---|---|---|---|---|---|---|---|---|---|
| | | L | A | J | N | $A_1$ | $A_2$ | $A_0$ | B | S | | | No. | Basic load rating (N) Cr | Basic load rating (N) Cor | | |
| **20** | **BF204** | 86 | 25.5 | 64 | 12 | 12 | 15 | 32.7 | 24.7 | 7 | M10 | | B4 | 12800 | 6600 | F204 G00 | 0.55 |
| **25** | **BF205** | 95 | 27 | 70 | 12 | 14 | 16 | 36.2 | 27 | 7.5 | M10 | | B5 | 14000 | 7900 | F205 G00 | 0.79 |
| **30** | **BF206** | 108 | 31 | 83 | 12 | 14 | 18 | 40.3 | 30.3 | 8 | M10 | | B6 | 19600 | 11300 | F206 G00 | 1.1 |
| **35** | **BF207** | 117 | 34 | 92 | 14 | 16 | 19 | 43.4 | 32.9 | 8.5 | M12 | | B7 | 25900 | 15400 | F207 G00 | 1.5 |

# Square Flange Units

## UGF type

### With eccentric collar

### Cylindrical bore

Shaft dia.: 20～60mm

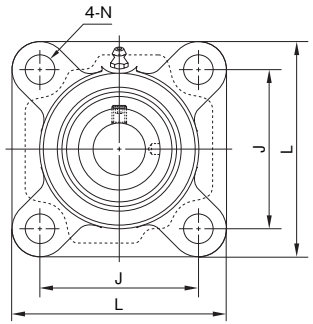


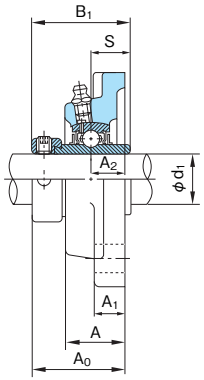


1N=0.102kgf

| Shaft dia. $d_1$ (mm) | Unit No. | Boundary dimensions (mm) | | | | | | | | | Bolt size | | Bearings | | | Housing No. | Mass of Unit (kg) |
|---|---|---|---|---|---|---|---|---|---|---|---|---|---|---|---|---|---|
| | | L | A | J | N | $A_1$ | $A_2$ | $A_0$ | $B_1$ | S | | | No. | Basic load rating (N) Cr | Basic load rating (N) Cor | | |
| **20** | **UGF204** | 86 | 25.5 | 64 | 12 | 12 | 15 | 41.6 | 43.7 | 17.1 | M10 | | UG204+ER | 12800 | 6600 | F204 | 0.63 |
| **25** | **UGF205** | 95 | 27 | 70 | 12 | 14 | 16 | 42.9 | 44.4 | 17.5 | M10 | | UG205+ER | 14000 | 7900 | F205 | 0.76 |
| **30** | **UGF206** | 108 | 31 | 83 | 12 | 14 | 18 | 48.1 | 48.4 | 18.3 | M10 | | UG206+ER | 19600 | 11300 | F206 | 1.1 |
| **35** | **UGF207** | 117 | 34 | 92 | 14 | 16 | 19 | 51.3 | 51.1 | 18.8 | M12 | | UG207+ER | 25900 | 15400 | F207 | 1.5 |
| **40** | **UGF208** | 130 | 36 | 102 | 16 | 16 | 21 | 55.9 | 56.3 | 21.4 | M14 | | UG208+ER | 29300 | 17900 | F208 | 1.9 |
| **45** | **UGF209** | 137 | 38 | 105 | 16 | 18 | 22 | 56.9 | 56.3 | 21.4 | M14 | | UG209+ER | 33000 | 20500 | F209 | 2.9 |
| **50** | **UGF210** | 143 | 40 | 111 | 16 | 18 | 22 | 60.1 | 62.7 | 24.6 | M14 | | UG210+ER | 35500 | 23200 | F210 | 2.5 |
| **55** | **UGF211** | 162 | 43 | 130 | 19 | 20 | 25 | 68.6 | 71.4 | 27.8 | M16 | | UG211+ER | 43000 | 29400 | F211 | 3.6 |
| **60** | **UGF212** | 175 | 48 | 143 | 19 | 20 | 29 | 75.8 | 77.8 | 31 | M16 | | UG212+ER | 52500 | 36100 | F212 | 4.3 |

Remark: Grease nipple: 1/4-28UNF

# Square Flange Units with spigot joint

## UCFS type

### With set screws

### Cylindrical bore

Shaft dia.: 25～140mm

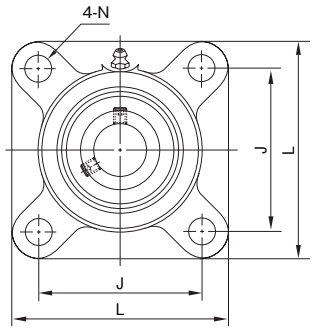


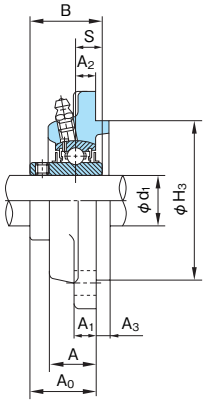


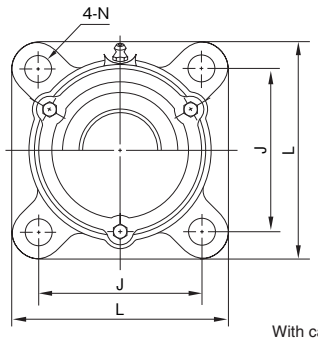


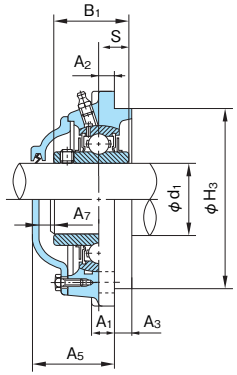


With cast covers

1N=0.102kgf

| Shaft dia. $d_1$ (mm) | Unit No. | Boundary dimensions (mm) | | | | | | | | | | | | | Bolt size | Bearings | | | Housing No. | Unit No. with cast cover | Mass of Unit (kg) | |
|---|---|---|---|---|---|---|---|---|---|---|---|---|---|---|---|---|---|---|---|---|---|---|
| | | L | A | J | N | $A_1$ | $A_2$ | $A_3$ | $H_3$ | $A_0$ | B | S | $A_5$ | $A_7$ | | No. | Basic load rating (N) Cr | Basic load rating (N) Cor | | Cover with rubber seal (End cover) | standard | With cast cover |
| 25 | **UCFS305** | 110 | 22 | 80 | 16 | 13 | 9 | 7 | 80 | 32 | 38 | 15 | 48 | 10 | M14 | UC305 | 21300 | 10900 | FS305 | **CUCFS305C(CE)** | 1.4 | 1.7 |
| 30 | **UCFS306** | 125 | 24 | 95 | 16 | 15 | 10 | 8 | 90 | 36 | 43 | 17 | 52 | 10 | M14 | UC306 | 26800 | 15000 | FS306 | **CUCFS306C(CE)** | 1.9 | 2.3 |
| 35 | **UCFS307** | 135 | 27 | 100 | 19 | 16 | 11 | 9 | 100 | 40 | 48 | 19 | 56 | 10 | M16 | UC307 | 33500 | 19200 | FS307 | **CUCFS307C(CE)** | 2.4 | 2.8 |
| 40 | **UCFS308** | 150 | 30 | 112 | 19 | 17 | 13 | 10 | 115 | 46 | 52 | 19 | 63 | 11 | M16 | UC308 | 40500 | 23900 | FS308 | **CUCFS308C(CE)** | 3.3 | 3.8 |
| 45 | **UCFS309** | 160 | 33 | 125 | 19 | 18 | 14 | 11 | 125 | 49 | 57 | 22 | 67 | 12 | M16 | UC309 | 51500 | 29500 | FS309 | **CUCFS309C(CE)** | 4.0 | 4.8 |
| 50 | **UCFS310** | 175 | 36 | 132 | 23 | 19 | 16 | 12 | 140 | 55 | 61 | 22 | 73 | 12 | M20 | UC310 | 61500 | 38200 | FS310 | **CUCFS310C(CE)** | 5.3 | 6.1 |
| 55 | **UCFS311** | 185 | 39 | 140 | 23 | 20 | 17 | 13 | 150 | 58 | 66 | 25 | 77 | 13 | M20 | UC311 | 71500 | 44800 | FS311 | **CUCFS311C(CE)** | 6.2 | 8.2 |
| 60 | **UCFS312** | 195 | 42 | 150 | 23 | 22 | 19 | 14 | 160 | 64 | 71 | 26 | 84 | 14 | M20 | UC312 | 81500 | 52000 | FS312 | **CUCFS312C(CE)** | 7.4 | 8.5 |
| 65 | **UCFS313** | 208 | 40 | 166 | 23 | 22 | 15 | 18 | 175 | 60 | 75 | 30 | 85 | 17 | M20 | UC313 | 92500 | 59700 | FS313 | **CUCFS313C(CE)** | 8.6 | 10.6 |
| 70 | **UCFS314** | 226 | 43 | 178 | 25 | 25 | 18 | 18 | 185 | 63 | 78 | 33 | 88 | 17 | M22 | UC314 | 104000 | 68000 | FS314 | **CUCFS314C(CE)** | 11.2 | 13.0 |
| 75 | **UCFS315** | 236 | 48 | 184 | 25 | 25 | 21 | 18 | 200 | 71 | 82 | 32 | 96 | 17 | M22 | UC315 | 114000 | 76900 | FS315 | **CUCFS315C(CE)** | 12.7 | 15.5 |
| 80 | **UCFS316** | 250 | 48 | 196 | 31 | 27 | 18 | 20 | 210 | 70 | 86 | 34 | 95 | 17 | M27 | UC316 | 123000 | 86400 | FS316 | **CUCFS316C(CE)** | 14.3 | 17.6 |
| 85 | **UCFS317** | 260 | 54 | 204 | 31 | 27 | 24 | 20 | 220 | 80 | 96 | 40 | 106 | 18 | M27 | UC317 | 132000 | 96500 | FS317 | **CUCFS317C(CE)** | 17.2 | 20.7 |
| 90 | **UCFS318** | 280 | 56 | 216 | 35 | 30 | 24 | 20 | 240 | 80 | 96 | 40 | 108 | 20 | M30 | UC318 | 143000 | 107200 | FS318 | **CUCFS318C(CE)** | 20.4 | 24.9 |
| 95 | **UCFS319** | 290 | 74 | 228 | 35 | 30 | 39 | 20 | 250 | 101 | 103 | 41 | 129 | 20 | M30 | UC319 | 153000 | 118400 | FS319 | **CUCFS319C(CE)** | 23.9 | 27.4 |
| 100 | **UCFS320** | 310 | 74 | 242 | 38 | 32 | 39 | 20 | 260 | 105 | 108 | 42 | 134 | 21 | M33 | UC320 | 173000 | 140400 | FS320 | **CUCFS320C(CE)** | 27.1 | 33.9 |
| 105 | **UCFS321** | 310 | 74 | 242 | 38 | 32 | 39 | 20 | 260 | 107 | 112 | 44 | 136 | 21 | M33 | UC321 | 183000 | 153100 | FS321 | **CUCFS321C(CE)** | 28.5 | 35.7 |
| 110 | **UCFS322** | 340 | 71 | 266 | 41 | 35 | 35 | 25 | 300 | 106 | 117 | 46 | 140 | 26 | M36 | UC322 | 205000 | 178800 | FS322 | **CUCFS322C(CE)** | 36.8 | 43.6 |
| 120 | **UCFS324** | 370 | 80 | 290 | 41 | 40 | 35 | 30 | 330 | 110 | 126 | 51 | 145 | 25 | M36 | UC324 | 207000 | 184800 | FS324 | **CUCFS324C(CE)** | 50.6 | 58.6 |
| 130 | **UCFS326** | 410 | 85 | 320 | 41 | 45 | 35 | 30 | 360 | 116 | 135 | 54 | 150 | 24 | M36 | UC326 | 229000 | 214300 | FS326 | **CUCFS326C(CE)** | 67.8 | 75.7 |
| 140 | **UCFS328** | 450 | 95 | 350 | 41 | 55 | 45 | 30 | 400 | 131 | 145 | 59 | 165 | 24 | M36 | UC328 | 255000 | 246000 | FS328 | **CUCFS328C(CE)** | 96.3 | 100 |

Remarks: 1. Grease nipple: 1/4-28UNF for bore number 13 and under
PF1/8 for bore number 14 and over

Remarks: 2. Examples of unit numbers with cover:
With cast cover { Cover with rubber seal :CUCFS310C
End cover :CUCFS310CE

# Square Flange Units with spigot joint

## UKFS+H type

### With adapter assembly

### Tapered bore

Shaft dia. : 20～125mm

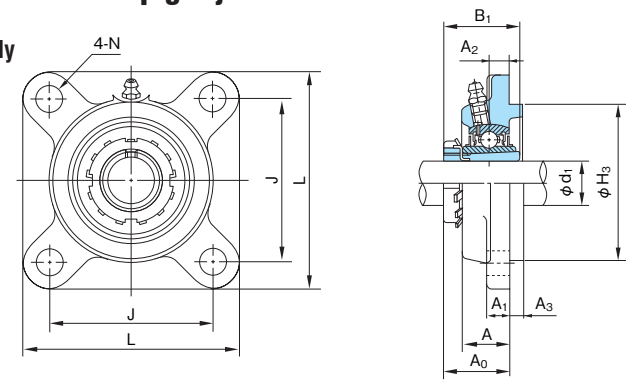


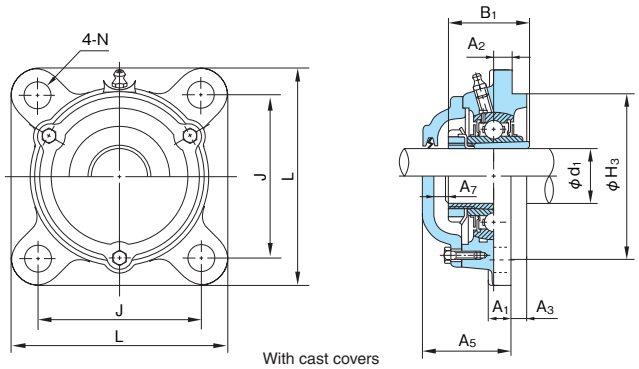


With cast covers

1N=0.102kgf

| Shaft dia. $d_1$ (mm) | Unit No. | Boundary dimensions (mm) | | | | | | | | | | | | Bolt size | Bearings | | | Housing No. | Unit No. with cast cover | Mass of Unit (kg) | |
|---|---|---|---|---|---|---|---|---|---|---|---|---|---|---|---|---|---|---|---|---|---|
| | | L | A | J | N | $A_1$ | $A_2$ | $A_3$ | $H_3$ | $A_0$ | $B_1$ | $A_5$ | $A_7$ | | No. | Basic load rating (N) Cr | Basic load rating (N) Cor | | Cover with rubber seal (End cover) | standard | With cast cover |
| 20 | **UKFS305+H2305** | 110 | 22 | 80 | 16 | 13 | 9 | 7 | 80 | 30 | 35 | 48 | 12 | M14 | UK305+H2305 | 21300 | 10900 | FS305 | **CUKFS305C(CE)+H2305** | 1.4 | 1.8 |
| 25 | **UKFS306+H2306** | 125 | 24 | 95 | 16 | 15 | 10 | 8 | 90 | 32.5 | 38 | 52 | 13 | M14 | UK306+H2306 | 26800 | 15000 | FS306 | **CUKFS306C(CE)+H2306** | 1.9 | 2.4 |
| 30 | **UKFS307+H2307** | 135 | 27 | 100 | 19 | 16 | 11 | 9 | 100 | 35.5 | 43 | 56 | 14 | M16 | UK307+H2307 | 33500 | 19200 | FS307 | **CUKFS307C(CE)+H2307** | 2.4 | 2.9 |
| 35 | **UKFS308+H2308** | 150 | 30 | 112 | 19 | 17 | 13 | 10 | 115 | 40 | 46 | 63 | 17 | M16 | UK308+H2308 | 40500 | 23900 | FS308 | **CUKFS308C(CE)+H2308** | 3.3 | 3.9 |
| 40 | **UKFS309+H2309** | 160 | 33 | 125 | 19 | 18 | 14 | 11 | 125 | 43.5 | 50 | 67 | 17 | M16 | UK309+H2309 | 51500 | 29500 | FS309 | **CUKFS309C(CE)+H2309** | 4.0 | 4.9 |
| 45 | **UKFS310+H2310** | 175 | 36 | 132 | 23 | 19 | 16 | 12 | 140 | 48 | 55 | 73 | 19 | M20 | UK310+H2310 | 61500 | 38200 | FS310 | **CUKFS310C(CE)+H2310** | 5.3 | 6.4 |
| 50 | **UKFS311+H2311** | 185 | 39 | 140 | 23 | 20 | 17 | 13 | 150 | 50.5 | 59 | 77 | 20 | M20 | UK311+H2311 | 71500 | 44800 | FS311 | **CUKFS311C(CE)+H2311** | 6.2 | 8.3 |
| 55 | **UKFS312+H2312** | 195 | 42 | 150 | 23 | 22 | 19 | 14 | 160 | 55 | 62 | 84 | 23 | M20 | UK312+H2312 | 81500 | 52000 | FS312 | **CUKFS312C(CE)+H2312** | 7.4 | 8.6 |
| 60 | **UKFS313+H2313** | 208 | 40 | 166 | 23 | 22 | 15 | 18 | 175 | 53 | 65 | 85 | 24 | M20 | UK313+H2313 | 92500 | 59700 | FS313 | **CUKFS313C(CE)+H2313** | 8.5 | 10.6 |
| 65 | **UKFS315+H2315** | 236 | 48 | 184 | 25 | 25 | 21 | 18 | 200 | 63 | 73 | 96 | 25 | M22 | UK315+H2315 | 114000 | 76900 | FS315 | **CUKFS315C(CE)+H2315** | 12.8 | 15.9 |
| 70 | **UKFS316+H2316** | 250 | 48 | 196 | 31 | 27 | 18 | 20 | 210 | 63.5 | 78 | 95 | 23 | M27 | UK316+H2316 | 123000 | 86400 | FS316 | **CUKFS316C(CE)+H2316** | 14.5 | 18.0 |
| 75 | **UKFS317+H2317** | 260 | 54 | 204 | 31 | 27 | 24 | 20 | 220 | 72 | 82 | 106 | 26 | M27 | UK317+H2317 | 132000 | 96500 | FS317 | **CUKFS317C(CE)+H2317** | 17.2 | 20.9 |
| 80 | **UKFS318+H2318** | 280 | 56 | 216 | 35 | 30 | 24 | 20 | 240 | 73.5 | 86 | 108 | 26 | M30 | UK318+H2318 | 143000 | 107200 | FS318 | **CUKFS318C(CE)+H2318** | 20.6 | 25.9 |
| 85 | **UKFS319+H2319** | 290 | 74 | 228 | 35 | 30 | 39 | 20 | 250 | 91 | 90 | 129 | 30 | M30 | UK319+H2319 | 153000 | 118400 | FS319 | **CUKFS319C(CE)+H2319** | 23.9 | 27.6 |
| 90 | **UKFS320+H2320** | 310 | 74 | 242 | 38 | 32 | 39 | 20 | 260 | 95 | 97 | 134 | 31 | M33 | UK320+H2320 | 173000 | 140400 | FS320 | **CUKFS320C(CE)+H2320** | 27.1 | 34.5 |
| 100 | **UKFS322+H2322** | 340 | 71 | 266 | 41 | 35 | 35 | 25 | 300 | 96 | 105 | 140 | 36 | M36 | UK322+H2322 | 205000 | 178800 | FS322 | **CUKFS322C(CE)+H2322** | 36.7 | 44.3 |
| 110 | **UKFS324+H2324** | 370 | 80 | 290 | 41 | 40 | 35 | 30 | 330 | 100 | 112 | 145 | 35 | M36 | UK324+H2324 | 207000 | 184800 | FS324 | **CUKFS324C(CE)+H2324** | 50.1 | 58.8 |
| 115 | **UKFS326+H2326** | 410 | 85 | 320 | 41 | 45 | 35 | 30 | 360 | 104 | 121 | 150 | 36 | M36 | UK326+H2326 | 229000 | 214300 | FS326 | **CUKFS326C(CE)+H2326** | 68.1 | 77.2 |
| 125 | **UKFS328+H2328** | 450 | 95 | 350 | 41 | 55 | 45 | 30 | 400 | 118 | 131 | 165 | 37 | M36 | UK238+H2328 | 255000 | 246000 | FS328 | **CUKFS328C(CE)+H2328** | 96.6 | 102.0 |

Remarks: 1. Grease nipple: 1/4-28UNF for bore number 13 and under
PF1/8 for bore number 14 and over

Remarks: 2. Examples of unit numbers with cover:
With cast cover { Cover with rubber seal :CUKFS310C+H2310
End cover :CUKFS310CE+H2310

# Round Flange Units with spigot joint

## UCFC type

**With set screws**

**Cylindrical bore**

Shaft dia.: 12～70mm

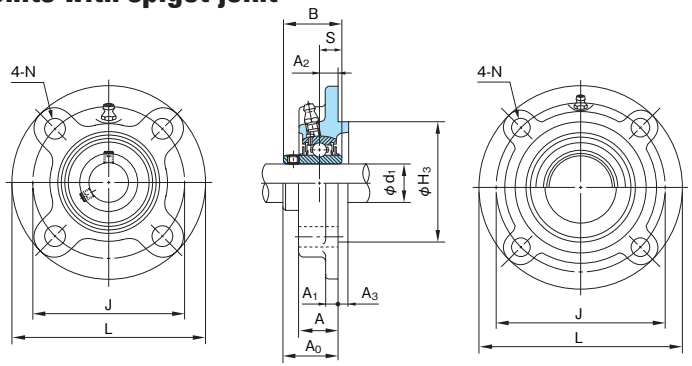


With steel cover

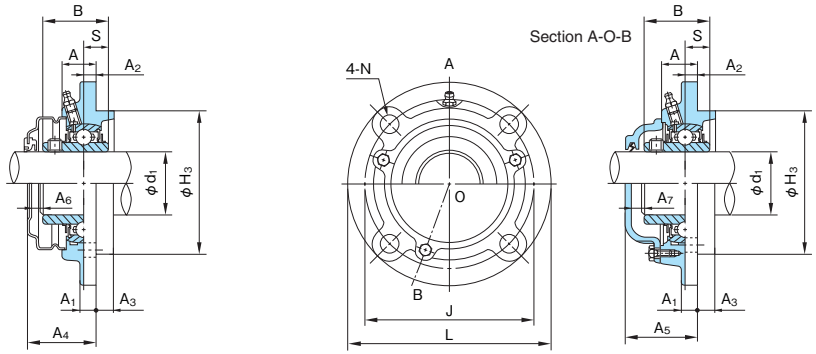


With cast cover

1N=0.102kgf

| Shaft dia. $d_1$ (mm) | Unit No. | Boundary dimensions (mm) | | | | | | | | | | | | | | | Bolt size | Bearings | | | Housing No. | Unit No. with steel cover | Unit No. with cast cover | Mass of Unit (kg) | | |
|---|---|---|---|---|---|---|---|---|---|---|---|---|---|---|---|---|---|---|---|---|---|---|---|---|---|---|
| | | L | A | J | N | $A_1$ | $A_2$ | $A_3$ | $H_3$ | $A_0$ | B | S | $A_4$ | $A_5$ | $A_6$ | $A_7$ | | No. | Basic load rating (N) Cr | Basic load rating (N) Cor | | Cover with rubber seal (End cover) | Cover with rubber seal (End cover) | standard | With steel cover | With cast cover |
| 12 | **UCFC201** | 100 | 20.5 | 78 | 12 | 7 | 10 | 5 | 62 | 28.3 | 31 | 12.7 | 38 | 41 | 8 | 6 | M10 | UC201 | 12800 | 6600 | FC204 | **UCFC201C(E)** | **CUCFC201C(CE)** | 0.89 | 0.92 | 1.2 |
| 15 | **UCFC202** | 100 | 20.5 | 78 | 12 | 7 | 10 | 5 | 62 | 28.3 | 31 | 12.7 | 38 | 41 | 8 | 6 | M10 | UC202 | 12800 | 6600 | FC204 | **UCFC202C(E)** | **CUCFC202C(CE)** | 0.87 | 0.90 | 1.2 |
| 17 | **UCFC203** | 100 | 20.5 | 78 | 12 | 7 | 10 | 5 | 62 | 28.3 | 31 | 12.7 | 38 | 41 | 8 | 6 | M10 | UC203 | 12800 | 6600 | FC204 | **UCFC203C(E)** | **CUCFC203C(CE)** | 0.86 | 0.89 | 1.2 |
| 20 | **UCFC204** | 100 | 20.5 | 78 | 12 | 7 | 10 | 5 | 62 | 28.3 | 31 | 12.7 | 38 | 41 | 8 | 6 | M10 | UC204 | 12800 | 6600 | FC204 | **UCFC204C(E)** | **CUCFC204C(CE)** | 0.84 | 0.87 | 1.2 |
| 25 | **UCFC205** | 115 | 21 | 90 | 12 | 7 | 10 | 6 | 70 | 29.7 | 34 | 14.3 | 42 | 45 | 11 | 9 | M10 | UC205 | 14000 | 7900 | FC205 | **UCFC205C(E)** | **CUCFC205C(CE)** | 1.1 | 1.1 | 1.5 |
| | **UCFCX05** | 111 | 24 | 92 | 9.5 | 9.5 | 10 | 6 | 76 | 32.2 | 38.1 | 15.9 | 43 | — | 9 | — | M 8 | UCX05 | 19600 | 11300 | FCX05 | **UCFCX05C(E)** | — | 1.1 | 1.1 | — |
| 30 | **UCFC206** | 125 | 23 | 100 | 12 | 8 | 10 | 8 | 80 | 32.2 | 38.1 | 15.9 | 43 | 47 | 9 | 8 | M10 | UC206 | 19600 | 11300 | FC206 | **UCFC206C(E)** | **CUCFC206C(CE)** | 1.5 | 1.5 | 2.0 |
| | **UCFCX06** | 127 | 22.5 | 105 | 12 | 9.5 | 8 | 9.5 | 85 | 33.4 | 42.9 | 17.5 | 43 | — | 8 | — | M10 | UCX06 | 25900 | 15400 | FCX06 | **UCFCX06C(E)** | — | 1.4 | 1.4 | — |
| 35 | **UCFC207** | 135 | 26 | 110 | 14 | 9 | 11 | 8 | 90 | 36.4 | 42.9 | 17.5 | 46 | 51 | 8 | 8 | M12 | UC207 | 25900 | 15400 | FC207 | **UCFC207C(E)** | **CUCFC207C(CE)** | 1.7 | 1.8 | 2.4 |
| | **UCFCX07** | 133 | 26 | 111 | 12 | 11 | 9 | 11 | 92 | 39.2 | 49.2 | 19 | 48 | — | 7 | — | M10 | UCX07 | 29300 | 17900 | FCX07 | **UCFCX07C(E)** | — | 1.8 | 1.8 | — |
| 40 | **UCFC208** | 145 | 26 | 120 | 14 | 9 | 11 | 10 | 100 | 41.2 | 49.2 | 19 | 52 | 56 | 10 | 8 | M12 | UC208 | 29300 | 17900 | FC208 | **UCFC208C(E)** | **CUCFC208C(CE)** | 2.1 | 2.1 | 2.8 |
| | **UCFCX08** | 133 | 26 | 111 | 12 | 11 | 9 | 11 | 92 | 39.2 | 49.2 | 19 | 50 | — | 10 | — | M10 | UCX08 | 33000 | 20500 | FCX08 | **UCFCX08C(E)** | — | 1.8 | 1.8 | — |
| 45 | **UCFC209** | 160 | 26 | 132 | 16 | 14 | 10 | 12 | 105 | 40.2 | 49.2 | 19 | 51 | 55 | 10 | 8 | M14 | UC209 | 33000 | 20500 | FC309 | **UCFC209C(E)** | **CUCFC209C(CE)** | 3.0 | 3.1 | 3.7 |
| | **UCFCX09** | 155 | 25 | 130 | 14 | 11 | 8 | 12 | 108 | 40.6 | 51.6 | 19 | 52 | — | 10 | — | M12 | UCX09 | 35500 | 23200 | FCX09 | **UCFCX09C(E)** | — | 2.5 | 2.6 | — |
| 50 | **UCFC210** | 165 | 28 | 138 | 16 | 14 | 10 | 12 | 110 | 42.6 | 51.6 | 19 | 54 | 59 | 9 | 10 | M14 | UC210 | 35500 | 23200 | FC210 | **UCFC210C(E)** | **CUCFC210C(CE)** | 3.1 | 3.3 | 4.2 |
| | **UCFCX10** | 162 | 25 | 136 | 14 | 11 | 7 | 16 | 118 | 40.4 | 55.6 | 22.2 | 51 | — | 9 | — | M12 | UCX10 | 43000 | 29400 | FCX10 | **UCFCX10C(E)** | — | 2.9 | 3.0 | — |
| 55 | **UCFC211** | 185 | 31 | 150 | 19 | 15 | 13 | 12 | 125 | 46.4 | 55.6 | 22.2 | 57 | 63 | 9 | 10 | M16 | UC211 | 43000 | 29400 | FC211 | **UCFC211C(E)** | **CUCFC211C(CE)** | 3.9 | 4.0 | 5.0 |
| | **UCFCX11** | 180 | 26 | 152 | 16 | 13 | 4 | 22 | 127 | 43.7 | 65.1 | 25.4 | 54 | — | 9 | — | M14 | UCX11 | 52500 | 36100 | FCX11 | **UCFCX11C(E)** | — | 4.0 | 4.2 | — |
| 60 | **UCFC212** | 195 | 36 | 160 | 19 | 15 | 17 | 12 | 135 | 56.7 | 65.1 | 25.4 | 68 | 74 | 10 | 11 | M16 | UC212 | 52500 | 36100 | FC212 | **UCFC212C(E)** | **CUCFC212C(CE)** | 4.4 | 4.6 | 6.0 |
| | **UCFCX12** | 194 | 33 | 165 | 16 | 14 | 11 | 20 | 140 | 50.7 | 65.1 | 25.4 | 63 | — | 11 | — | M14 | UCX12 | 57500 | 40000 | FCX12 | **UCFCX12C(E)** | — | 4.6 | 4.8 | — |
| 65 | **UCFC213** | 205 | 36 | 170 | 19 | 15 | 16 | 14 | 145 | 55.7 | 65.1 | 25.4 | 67 | 75 | 10 | 13 | M16 | UC213 | 57500 | 40000 | FC213 | **UCFC213C(E)** | **CUCFC213C(CE)** | 5.3 | 5.5 | 7.0 |
| | **UCFCX13** | 194 | 33 | 165 | 16 | 14 | 11 | 20 | 140 | 55.4 | 74.6 | 30.2 | — | — | — | — | M14 | UCX13 | 62000 | 44000 | FCX13 | — | — | 4.9 | — | — |
| 70 | **UCFC214** | 215 | 40 | 177 | 19 | 18 | 17 | 14 | 150 | 61.4 | 74.6 | 30.2 | — | 84 | — | 16 | M16 | UC214 | 62000 | 44000 | FC214 | — | **CUCFC214C(CE)** | 6.8 | — | 8.2 |
| | **UCFCX14** | 222 | 36 | 190 | 19 | 14 | 14 | 20 | 164 | 58.5 | 77.8 | 33.3 | — | — | — | — | M16 | UCX14 | 66000 | 48200 | FCX14 | — | — | 7.4 | — | — |

Remarks: 1. Grease nipple: 1/4-28UNF for bore number 13 and under
PF1/8 for bore number 14 and over

Remarks: 2. Examples of unit numbers with cover:
With steel cover { Cover with rubber seal :UCFC210C
End cover :UCFC210E
With cast cover { Cover with rubber seal :CUCFC210C
End cover :CUCFC210CE

# Round Flange Units with spigot joint

## UCFC type

**With set screws**

**Cylindrical bore**

Shaft dia.: 75～100mm

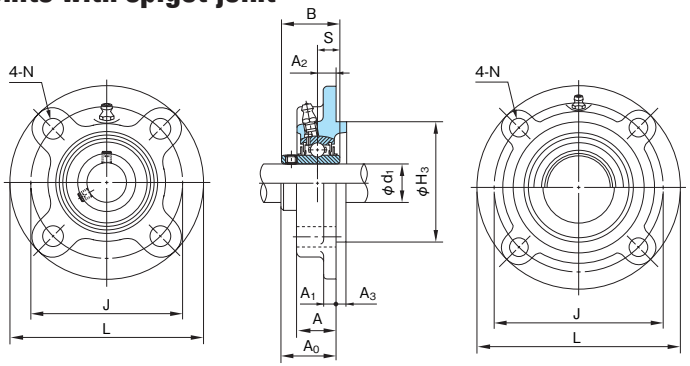


With steel cover

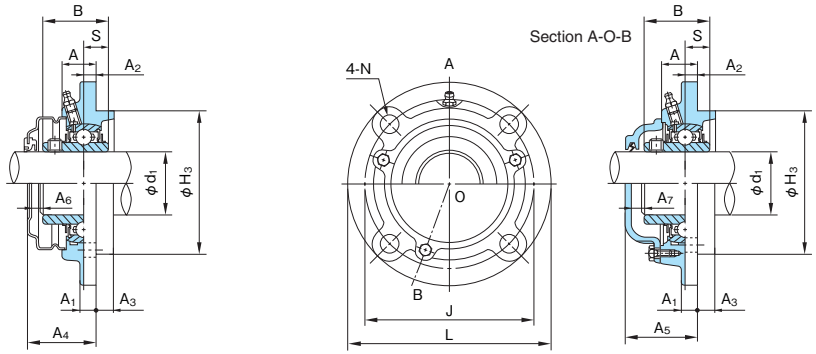


With cast cover

1N=0.102kgf

| Shaft dia. $d_1$ (mm) | Unit No. | Boundary dimensions (mm) | | | | | | | | | | | | | | | Bolt size | Bearings | | | Housing No. | Unit No. with steel cover | Unit No. with cast cover | Mass of Unit (kg) | | |
|---|---|---|---|---|---|---|---|---|---|---|---|---|---|---|---|---|---|---|---|---|---|---|---|---|---|---|
| | | L | A | J | N | $A_1$ | $A_2$ | $A_3$ | $H_3$ | $A_0$ | B | S | $A_4$ | $A_5$ | $A_6$ | $A_7$ | | No. | Basic load rating (N) Cr | Basic load rating (N) Cor | | Cover with rubber seal (End cover) | Cover with rubber seal (End cover) | standard | With steel cover | With cast cover |
| 75 | **UCFC215** | 220 | 40 | 184 | 19 | 18 | 18 | 16 | 160 | 62.5 | 77.8 | 33.3 | — | 86 | — | 17 | M16 | UC215 | 66000 | 48200 | FC215 | — | **CUCFC215C(CE)** | 7.4 | — | 8.8 |
| | **UCFCX15** | 222 | 35 | 190 | 19 | 16 | 12 | 22 | 164 | 61.3 | 82.6 | 33.3 | — | — | — | — | M16 | UCX15 | 72500 | 53000 | FCX15 | — | — | 7.4 | — | — |
| 80 | **UCFC216** | 240 | 42 | 200 | 23 | 18 | 18 | 16 | 170 | 67.3 | 82.6 | 33.3 | — | 91 | — | 15 | M20 | UC216 | 72500 | 53000 | FC216 | — | **CUCFC216C(CE)** | 9.2 | — | 11.3 |
| | **UCFCX16** | 260 | 36 | 219 | 23 | 19 | 10 | 25 | 186 | 61.6 | 85.7 | 34.1 | — | — | — | — | M20 | UCX16 | 83500 | 61800 | FCX16 | — | — | 11.5 | — | — |
| 85 | **UCFC217** | 250 | 45 | 208 | 23 | 20 | 18 | 18 | 180 | 69.6 | 85.7 | 34.1 | — | 93 | — | 15 | M20 | UC217 | 83500 | 61800 | FC217 | — | **CUCFC217C(CE)** | 10.6 | — | 12.8 |
| | **UCFCX17** | 260 | 36 | 219 | 23 | 19 | 10 | 25 | 186 | 66.3 | 96 | 39.7 | — | — | — | — | M20 | UCX17 | 95500 | 71400 | FCX17 | — | — | 11.1 | — | — |
| 90 | **UCFC218** | 265 | 50 | 220 | 23 | 20 | 22 | 18 | 190 | 78.3 | 96 | 39.7 | — | 104 | — | 17 | M20 | UC218 | 95500 | 71400 | FC218 | — | **CUCFC218C(CE)** | 12.7 | — | 15.9 |
| | **UCFCX18** | 260 | 43 | 219 | 23 | 19 | 12 | 28 | 186 | 73.1 | 104 | 42.9 | — | — | — | — | M20 | UCX18 | 109000 | 81600 | FCX18 | — | — | 11.3 | — | — |
| 100 | **UCFCX20** | 276 | 66 | 238 | 23 | 22 | 22 | 28 | 206 | 90.3 | 117.5 | 49.2 | — | — | — | — | M20 | UCX20 | 134000 | 104700 | FCX20 | — | — | 15.9 | — | — |

Remarks: 1. Grease nipple: PF1/8

Remarks: 2. Examples of unit numbers with cover:

With cast cover { Cover with rubber seal :CUCFC215C
End cover :CUCFC215CE

# Round Flange Units with spigot joint

## UKFC+H type

**With adapter assembly**

**Tapered bore**

Shaft dia.:
20～90mm

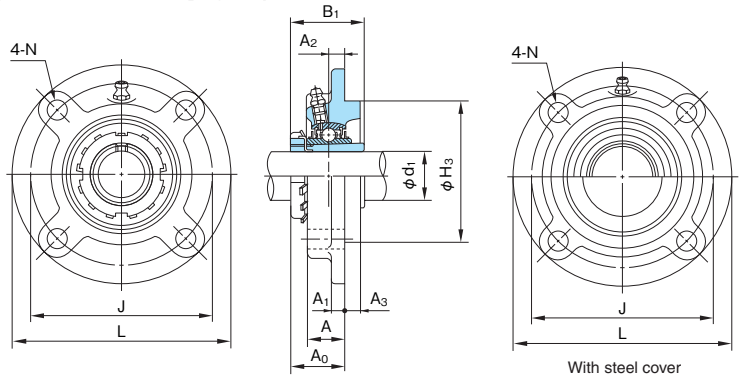


With steel cover

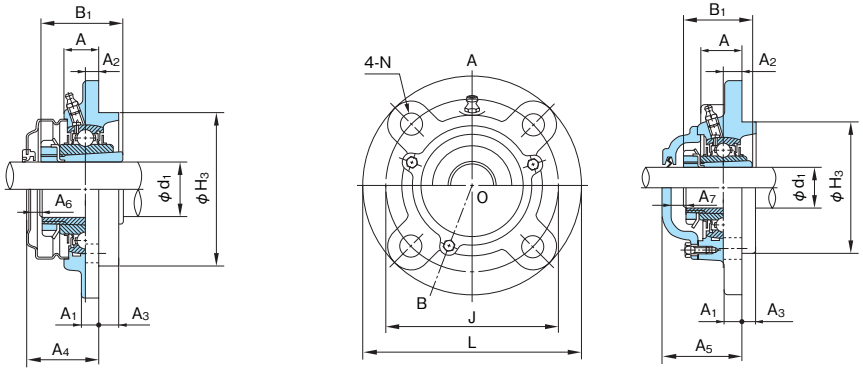


With cast cover

1N=0.102kgf

| Shaft dia. $d_1$ (mm) | Unit No. | Boundary dimensions (mm) | | | | | | | | | | | | | | Bolt size | Bearings | | | Housing No. | Unit No. with steel cover | Unit No. with cast cover | Mass of Unit (kg) | | |
|---|---|---|---|---|---|---|---|---|---|---|---|---|---|---|---|---|---|---|---|---|---|---|---|---|---|
| | | L | A | J | N | $A_1$ | $A_2$ | $A_3$ | $H_3$ | $A_0$ | $B_1$ | $A_4$ | $A_5$ | $A_6$ | $A_7$ | | No. | Basic load rating (N) Cr | Basic load rating (N) Cor | | Cover with rubber seal (End cover) | Cover with rubber seal (End cover) | standard | With steel cover | With cast cover |
| 20 | **UKFC205+H2305** | 115 | 21 | 90 | 12 | 7 | 10 | 6 | 70 | 29.5 | 35 | 42 | 45 | 11 | 9 | M10 | UK205+H2305 | 14000 | 7900 | FC205 | **UKFC205C(E)+H2305** | **CUKFC205C(CE)+H2305** | 1.1 | 1.2 | 1.6 |
| | **UKFCX05+H2305** | 111 | 24 | 92 | 9.5 | 9.5 | 10 | 6 | 76 | 31 | 35 | 43 | — | 10 | — | M 8 | UKX05+H2305 | 19600 | 11300 | FCX05 | **UKFCX05C(E)+H2305** | — | 1.1 | 1.1 | — |
| 25 | **UKFC206+H2306** | 125 | 23 | 100 | 12 | 8 | 10 | 8 | 80 | 31 | 38 | 43 | 47 | 10 | 10 | M10 | UK206+H2306 | 19600 | 11300 | FC206 | **UKFC206C(E)+H2306** | **CUKFC206C(CE)+H2306** | 1.6 | 1.6 | 2.1 |
| | **UKFCX06+H2306** | 127 | 22.5 | 105 | 12 | 9.5 | 8 | 9.5 | 85 | 29.5 | 38 | 43 | — | 12 | — | M10 | UKX06+H2306 | 25900 | 15400 | FCX06 | **UKFCX06C(E)+H2306** | — | 1.5 | 1.5 | — |
| 30 | **UKFC207+H2307** | 135 | 26 | 110 | 14 | 9 | 11 | 8 | 90 | 33.5 | 43 | 46 | 51 | 11 | 11 | M12 | UK207+H2307 | 25900 | 15400 | FC207 | **UKFC207C(E)+H2307** | **CUKFC207C(CE)+H2307** | 1.8 | 1.9 | 2.5 |
| | **UKFCX07+H2307** | 133 | 26 | 111 | 12 | 11 | 9 | 11 | 92 | 32.5 | 43 | 48 | — | 14 | — | M10 | UKX07+H2307 | 29300 | 17900 | FCX07 | **UKFCX07C(E)+H2307** | — | 1.8 | 1.8 | — |
| 35 | **UKFC208+H2308** | 145 | 26 | 120 | 14 | 9 | 11 | 10 | 100 | 35.5 | 46 | 52 | 56 | 15 | 14 | M12 | UK208+H2308 | 29300 | 17900 | FC208 | **UKFC208C(E)+H2308** | **CUKFC208C(CE)+H2308** | 2.2 | 2.2 | 2.9 |
| | **UKFCX08+H2308** | 133 | 26 | 111 | 12 | 11 | 9 | 11 | 92 | 34 | 46 | 50 | — | 15 | — | M10 | UKX08+H2308 | 33000 | 20500 | FCX08 | **UKFCX08C(E)+H2308** | — | 1.8 | 1.8 | — |
| 40 | **UKFC209+H2309** | 160 | 26 | 132 | 16 | 14 | 10 | 12 | 105 | 36 | 50 | 51 | 55 | 14 | 13 | M14 | UK209+H2309 | 33000 | 20500 | FC209 | **UKFC209C(E)+H2309** | **CUKFC209C(CE)+H2309** | 3.1 | 3.2 | 3.8 |
| | **UKFCX09+H2309** | 155 | 25 | 130 | 14 | 11 | 8 | 12 | 108 | 34.5 | 50 | 52 | — | 16 | — | M12 | UKX09+H2309 | 35500 | 23200 | FCX09 | **UKFCX09C(E)+H2309** | — | 2.5 | 2.6 | — |
| 45 | **UKFC210+H2310** | 165 | 28 | 138 | 16 | 14 | 10 | 12 | 110 | 37.5 | 55 | 54 | 59 | 15 | 15 | M14 | UK210+H2310 | 35500 | 23200 | FC210 | **UKFC210C(E)+H2310** | **CUKFC210C(CE)+H2310** | 3.3 | 3.5 | 4.4 |
| | **UKFCX10+H2310** | 162 | 25 | 136 | 14 | 11 | 7 | 16 | 118 | 35.5 | 55 | 51 | — | 14 | — | M12 | UKX10+H2310 | 43000 | 29400 | FCX10 | **UKFCX10C(E)+H2310** | — | 2.9 | 3.0 | — |
| 50 | **UKFC211+H2311** | 185 | 31 | 150 | 19 | 15 | 13 | 12 | 125 | 41.5 | 59 | 57 | 63 | 14 | 15 | M16 | UK211+H2311 | 43000 | 29400 | FC211 | **UKFC211C(E)+H2311** | **CUKFC211C(CE)+H2311** | 4.0 | 4.2 | 5.2 |
| | **UKFCX11+H2311** | 180 | 26 | 152 | 16 | 13 | 4 | 22 | 127 | 34 | 59 | 54 | — | 19 | — | M14 | UKX11+H2311 | 52500 | 36100 | FCX11 | **UKFCX11C(E)+H2311** | — | 3.9 | 4.0 | — |
| 55 | **UKFC212+H2312** | 195 | 36 | 160 | 19 | 15 | 17 | 12 | 135 | 48 | 62 | 68 | 74 | 19 | 20 | M16 | UK212+H2312 | 52500 | 36100 | FC212 | **UKFC212C(E)+H2312** | **CUKFC212C(CE)+H2312** | 4.4 | 4.7 | 6.1 |
| | **UKFCX12+H2312** | 194 | 33 | 165 | 16 | 14 | 11 | 20 | 140 | 43 | 62 | 63 | — | 19 | — | M14 | UKX12+H2312 | 57500 | 40000 | FCX12 | **UKFCX12C(E)+H2312** | — | 4.6 | 4.7 | — |
| 60 | **UKFC213+H2313** | 205 | 36 | 170 | 19 | 15 | 16 | 14 | 145 | 49 | 65 | 67 | 75 | 17 | 20 | M16 | UK213+H2313 | 57500 | 40000 | FC213 | **UKFC213C(E)+H2313** | **CUKFC213C(CE)+H2313** | 5.4 | 5.7 | 7.2 |
| | **UKFCX13+H2313** | 194 | 33 | 165 | 16 | 14 | 11 | 20 | 140 | 45 | 65 | — | — | — | — | M14 | UKX13+H2313 | 62000 | 44000 | FCX13 | — | — | 4.7 | — | — |
| 65 | **UKFC215+H2315** | 220 | 40 | 184 | 19 | 18 | 18 | 16 | 160 | 53.5 | 73 | — | 86 | — | 26 | M16 | UK215+H2315 | 66000 | 48200 | FC215 | — | **CUKFC215C(CE)+H2315** | 7.8 | — | 9.2 |
| | **UKFCX15+H2315** | 222 | 35 | 190 | 19 | 16 | 12 | 22 | 164 | 49 | 73 | — | — | — | — | M16 | UKX15+H2315 | 72500 | 53000 | FCX15 | — | — | 7.4 | — | — |
| 70 | **UKFC216+H2316** | 240 | 42 | 200 | 23 | 18 | 18 | 16 | 170 | 57 | 78 | — | 91 | — | 26 | M20 | UK216+H2316 | 72500 | 53000 | FC216 | — | **CUKFC216C(CE)+H2316** | 9.6 | — | 11.7 |
| | **UKFCX16+H2316** | 260 | 36 | 219 | 23 | 19 | 10 | 25 | 186 | 50 | 78 | — | — | — | — | M20 | UKX16+H2316 | 83500 | 61800 | FCX16 | — | — | 11.6 | — | — |
| 75 | **UKFC217+H2317** | 250 | 45 | 208 | 23 | 20 | 18 | 18 | 180 | 59 | 82 | — | 93 | — | 26 | M20 | UK217+H2317 | 83500 | 61800 | FC217 | — | **CUKFC217C(CE)+H2317** | 11.1 | — | 13.4 |
| | **UKFCX17+H2317** | 260 | 36 | 219 | 23 | 19 | 10 | 25 | 186 | 52.5 | 82 | — | — | — | — | M20 | UKX17+H2317 | 95500 | 71400 | FCX17 | — | — | 11.0 | — | — |
| 80 | **UKFC218+H2318** | 265 | 50 | 220 | 23 | 20 | 22 | 18 | 190 | 64.5 | 86 | — | 104 | — | 31 | M20 | UK218+H2318 | 95500 | 71400 | FC218 | — | **CUKFC218C(CE)+H2318** | 13.1 | — | 16.3 |
| | **UKFCX18+H2318** | 260 | 43 | 219 | 23 | 19 | 12 | 28 | 186 | 56 | 86 | — | — | — | — | M20 | UKX18+H2318 | 109000 | 81600 | FCX18 | — | — | 11.0 | — | — |
| 90 | **UKFCX20+H2320** | 276 | 66 | 238 | 23 | 22 | 22 | 28 | 206 | 71 | 97 | — | — | — | — | M20 | UKX20+H2320 | 134000 | 104700 | FCX20 | — | — | 14.9 | — | — |

Remarks: 1. Grease nipple : 1/4-28UNF for bore number 13 and under
PF1/8 for bore number 14 and over

Remarks: 2. Examples of unit numbers with cover:
With steel cover { Cover with rubber seal :UKFC210C+H2310
End cover :UKFC210E+H2310
With cast cover { Cover with rubber seal :CUKFC210C+H2310
End cover :CUKFC210CE+H2310

NACHI

# Round Flange Units with spigot joint

## BFC type

**With set screws**

**Cylindrical bore**

Shaft dia.: 20～35mm

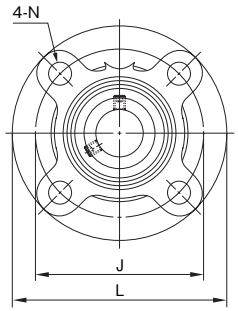


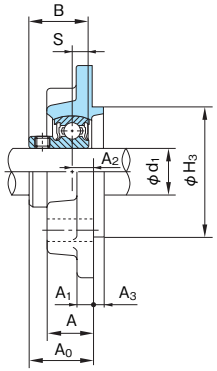


1N=0.102kgf

| Shaft dia. $d_1$ (mm) | Unit No. | Boundary dimensions (mm) | | | | | | | | | | | Bolt size | | Bearings | | | Housing No. | Mass of Unit (kg) |
|---|---|---|---|---|---|---|---|---|---|---|---|---|---|---|---|---|---|---|---|
| | | L | A | J | N | $A_1$ | $A_2$ | $A_3$ | $H_3$ | $A_0$ | B | S | | | No. | Basic load rating (N) Cr | Basic load rating (N) Cor | | |
| 20 | BFC204 | 100 | 20.5 | 78 | 12 | 7 | 10 | 5 | 62 | 27.7 | 24.7 | 7 | M10 | | B4 | 12800 | 6600 | FC204 G00 | 0.8 |
| 25 | BFC205 | 115 | 21 | 90 | 12 | 7 | 10 | 6 | 70 | 30.2 | 27 | 7.5 | M10 | | B5 | 14000 | 7900 | FC205 G00 | 1.0 |
| 30 | BFC206 | 125 | 23 | 100 | 12 | 8 | 10 | 8 | 80 | 32.3 | 30.3 | 8 | M10 | | B6 | 19600 | 11300 | FC206 G00 | 1.4 |
| 35 | BFC207 | 135 | 26 | 110 | 14 | 9 | 11 | 8 | 90 | 35.4 | 32.9 | 8.5 | M12 | | B7 | 25900 | 15400 | FC207 G00 | 1.7 |

NACHI

# Round Flange Units with spigot joint

## UGF type

**With eccentric collar**

**Cylindrical bore**

Shaft dia.: 20～60mm

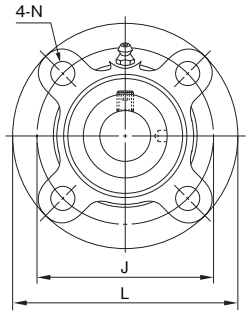


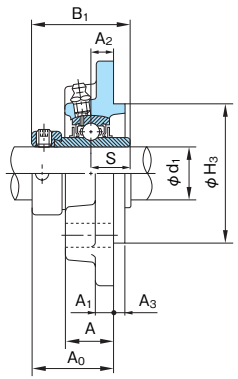


1N=0.102kgf

| Shaft dia. $d_1$ (mm) | Unit No. | Boundary dimensions (mm) | | | | | | | | | | | Bolt size | | Bearings | | | Housing No. | Mass of Unit (kg) |
|---|---|---|---|---|---|---|---|---|---|---|---|---|---|---|---|---|---|---|---|
| | | L | A | J | N | $A_1$ | $A_2$ | $A_3$ | $H_3$ | $A_0$ | $B_1$ | S | | | No. | Basic load rating (N) Cr | Basic load rating (N) Cor | | |
| **20** | **UGFC204** | 100 | 20.5 | 78 | 12 | 7 | 10 | 5 | 62 | 36.6 | 43.7 | 17.1 | M10 | | UG204+ER | 12800 | 6600 | FC204 | 0.89 |
| **25** | **UGFC205** | 115 | 21 | 90 | 12 | 7 | 10 | 6 | 70 | 36.9 | 44.4 | 17.5 | M10 | | UG205+ER | 14000 | 7900 | FC205 | 1.0 |
| **30** | **UGFC206** | 125 | 23 | 100 | 12 | 8 | 10 | 8 | 80 | 40.1 | 48.4 | 18.3 | M10 | | UG206+ER | 19600 | 11300 | FC206 | 1.2 |
| **35** | **UGFC207** | 135 | 26 | 110 | 14 | 9 | 11 | 8 | 90 | 43.3 | 51.1 | 18.8 | M12 | | UG207+ER | 25900 | 15400 | FC207 | 1.7 |
| **40** | **UGFC208** | 145 | 26 | 120 | 14 | 9 | 11 | 10 | 100 | 45.9 | 56.3 | 21.4 | M12 | | UG208+ER | 29300 | 17900 | FC208 | 2.0 |
| **45** | **UGFC209** | 160 | 26 | 132 | 16 | 14 | 10 | 12 | 105 | 44.9 | 56.3 | 21.4 | M14 | | UG209+ER | 33000 | 20500 | FC209 | 2.5 |
| **50** | **UGFC210** | 165 | 28 | 138 | 16 | 14 | 10 | 12 | 110 | 48.1 | 62.7 | 24.6 | M14 | | UG210+ER | 35500 | 23200 | FC210 | 2.8 |
| **55** | **UGFC211** | 185 | 31 | 150 | 19 | 15 | 13 | 12 | 125 | 56.6 | 71.4 | 27.8 | M16 | | UG211+ER | 43000 | 29400 | FC211 | 4.1 |
| **60** | **UGFC212** | 195 | 36 | 160 | 19 | 15 | 17 | 12 | 135 | 63.8 | 77.8 | 31 | M16 | | UG212+ER | 52500 | 36100 | FC212 | 4.8 |

Remark: Grease nipple:1/4-28UNF

# Rhombic Flange Units

## UCFL type

### With set screws

### Cylindrical bore

Shaft dia.: 12～60mm

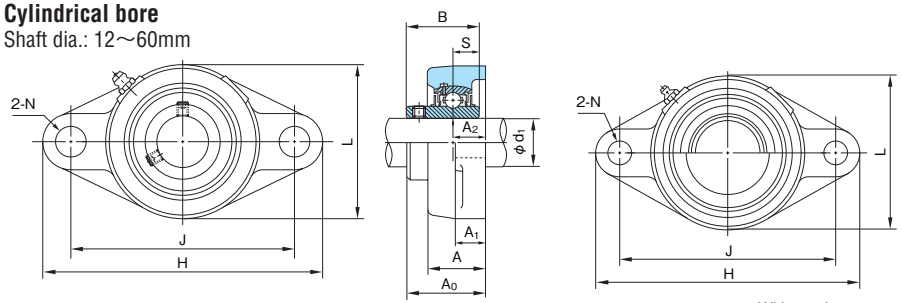


With steel cover

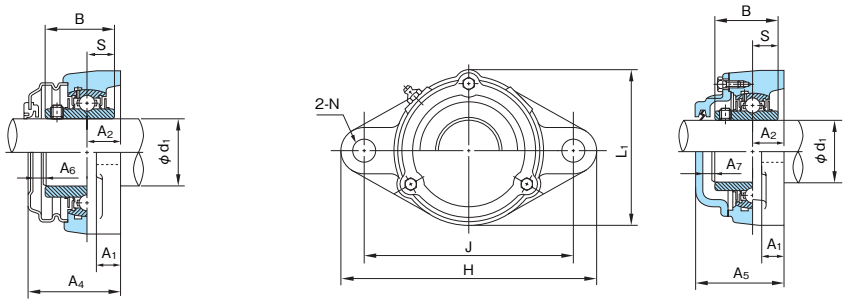


With cast cover

1N=0.102kgf

| Shaft dia. $d_1$ (mm) | Unit No. | Boundary dimensions (mm) | | | | | | | | | | | | | | | Bolt size | Bearings | | | Housing No. | Unit No. with steel cover | Unit No. with cast cover | Mass of Unit (kg) | | |
|---|---|---|---|---|---|---|---|---|---|---|---|---|---|---|---|---|---|---|---|---|---|---|---|---|---|---|
| | | H | L | $L_1$ | A | J | N | $A_1$ | $A_2$ | $A_0$ | B | S | $A_4$ | $A_5$ | $A_6$ | $A_7$ | | No. | Basic load rating (N) Cr | Basic load rating (N) Cor | | Cover with rubber seal (End cover) | Cover with rubber seal (End cover) | standard | With steel cover | With cast cover |
| 12 | **UCFL201** | 113 | 60 | 66 | 25.5 | 90 | 12 | 12 | 15 | 33.3 | 31 | 12.7 | 43 | 46 | 8 | 6 | M10 | UC201 | 12800 | 6600 | FL204 | **UCFL201C(E)** | **CUCFL201C(CE)** | 0.50 | 0.53 | 0.8 |
| 15 | **UCFL202** | 113 | 60 | 66 | 25.5 | 90 | 12 | 12 | 15 | 33.3 | 31 | 12.7 | 43 | 46 | 8 | 6 | M10 | UC202 | 12800 | 6600 | FL204 | **UCFL202C(E)** | **CUCFL202C(CE)** | 0.48 | 0.51 | 0.8 |
| 17 | **UCFL203** | 113 | 60 | 66 | 25.5 | 90 | 12 | 12 | 15 | 33.3 | 31 | 12.7 | 43 | 46 | 8 | 6 | M10 | UC203 | 12800 | 6600 | FL204 | **UCFL203C(E)** | **CUCFL203C(CE)** | 0.47 | 0.50 | 0.8 |
| 20 | **UCFL204** | 113 | 60 | 66 | 25.5 | 90 | 12 | 12 | 15 | 33.3 | 31 | 12.7 | 43 | 46 | 8 | 6 | M10 | UC204 | 12800 | 6600 | FL204 | **UCFL204C(E)** | **CUCFL204C(CE)** | 0.45 | 0.48 | 0.8 |
| 25 | **UCFL205** | 130 | 68 | 73 | 27 | 99 | 16 | 14 | 16 | 35.7 | 34 | 14.3 | 47 | 51 | 10 | 9 | M14 | UC205 | 14000 | 7900 | FL205 | **UCFL205C(E)** | **CUCFL205C(CE)** | 0.63 | 0.67 | 1.0 |
| | **UCFLX05** | 141 | 83 | — | 30 | 117 | 12 | 13 | 18 | 40.2 | 38.1 | 15.9 | 51 | — | 8 | — | M10 | UCX05 | 19600 | 11300 | FLX05 | **UCFLX05C(E)** | — | 1.0 | 1.0 | — |
| | **UCFL305** | 150 | 80 | 84 | 29 | 113 | 19 | 13 | 16 | 39 | 38 | 15 | — | 55 | — | 10 | M16 | UC305 | 21300 | 10900 | FL305 | — | **CUCFL305C(CE)** | 1.1 | — | 1.4 |
| 30 | **UCFL206** | 148 | 80 | 84 | 31 | 117 | 16 | 14 | 18 | 40.2 | 38.1 | 15.9 | 49 | 55 | 8 | 8 | M14 | UC206 | 19600 | 11300 | FL206 | **UCFL206C(E)** | **CUCFL206C(CE)** | 0.96 | 1.0 | 1.5 |
| | **UCFLX06** | 156 | 95 | — | 34 | 130 | 16 | 14 | 19 | 44.4 | 42.9 | 17.5 | 54 | — | 8 | — | M14 | UCX06 | 25900 | 15400 | FLX06 | **UCFLX06C(E)** | — | 1.4 | 1.4 | — |
| | **UCFL306** | 180 | 90 | 94 | 32 | 134 | 23 | 15 | 18 | 44 | 43 | 17 | — | 60 | — | 10 | M20 | UC306 | 26800 | 15000 | FL306 | — | **CUCFL306C(CE)** | 1.5 | — | 1.9 |
| 35 | **UCFL207** | 161 | 90 | 94 | 34 | 130 | 16 | 16 | 19 | 44.4 | 42.9 | 17.5 | 54 | 59 | 8 | 8 | M14 | UC207 | 25900 | 15400 | FL207 | **UCFL207C(E)** | **CUCFL207C(CE)** | 1.2 | 1.3 | 1.9 |
| | **UCFLX07** | 171 | 105 | — | 38 | 144 | 16 | 14 | 21 | 51.2 | 49.2 | 19 | 63 | — | 10 | — | M14 | UCX07 | 29300 | 17900 | FLX07 | **UCFLX07C(E)** | — | 1.9 | 2.0 | — |
| | **UCFL307** | 185 | 100 | 104 | 36 | 141 | 23 | 16 | 20 | 49 | 48 | 19 | — | 65 | — | 10 | M20 | UC307 | 33500 | 19200 | FL307 | — | **CUCFL307C(CE)** | 1.8 | — | 2.3 |
| 40 | **UCFL208** | 175 | 100 | 104 | 36 | 144 | 16 | 16 | 21 | 51.2 | 49.2 | 19 | 61 | 66 | 9 | 8 | M14 | UC208 | 29300 | 17900 | FL208 | **UCFL208C(E)** | **CUCFL208C(CE)** | 1.6 | 1.7 | 2.3 |
| | **UCFLX08** | 179 | 111 | — | 40 | 148 | 16 | 14 | 22 | 52.2 | 49.2 | 19 | 63 | — | 10 | — | M14 | UCX08 | 33000 | 20500 | FLX08 | **UCFLX08C(E)** | — | 2.0 | 2.1 | — |
| | **UCFL308** | 200 | 112 | 118 | 40 | 158 | 23 | 17 | 23 | 56 | 52 | 19 | — | 73 | — | 11 | M20 | UC308 | 40500 | 23900 | FL308 | — | **CUCFL308C(CE)** | 2.4 | — | 2.9 |
| 45 | **UCFL209** | 188 | 108 | 113 | 38 | 148 | 19 | 18 | 22 | 52.2 | 49.2 | 19 | 63 | 67 | 10 | 8 | M16 | UC209 | 33000 | 20500 | FL209 | **UCFL209C(E)** | **CUCFL209C(CE)** | 1.9 | 2.0 | 2.7 |
| | **UCFLX09** | 189 | 116 | — | 40 | 157 | 16 | 14 | 23 | 55.6 | 51.6 | 19 | 67 | — | 9 | — | M14 | UCX09 | 35500 | 23200 | FLX09 | **UCFLX09C(E)** | — | 2.4 | 2.5 | — |
| | **UCFL309** | 230 | 125 | 132 | 44 | 177 | 25 | 18 | 25 | 60 | 57 | 22 | — | 78 | — | 12 | M22 | UC309 | 51500 | 29500 | FL309 | — | **CUCFL309C(CE)** | 3.4 | — | 4.2 |
| 50 | **UCFL210** | 197 | 115 | 120 | 40 | 157 | 19 | 18 | 22 | 54.6 | 51.6 | 19 | 66 | 71 | 9 | 10 | M16 | UC210 | 35500 | 23200 | FL210 | **UCFL210C(E)** | **CUCFL210C(CE)** | 2.2 | 2.3 | 3.2 |
| | **UCFLX10** | 216 | 133 | — | 44 | 184 | 19 | 20 | 26 | 59.4 | 55.6 | 22.2 | 70 | — | 9 | — | M16 | UCX10 | 43000 | 29400 | FLX10 | **UCFLX10C(E)** | — | 3.6 | 3.7 | — |
| | **UCFL310** | 240 | 140 | 144 | 48 | 187 | 25 | 19 | 28 | 67 | 61 | 22 | — | 85 | — | 12 | M22 | UC310 | 61500 | 38200 | FL310 | — | **CUCFL310C(CE)** | 4.3 | — | 5.2 |
| 55 | **UCFL211** | 224 | 130 | 134 | 43 | 184 | 19 | 20 | 25 | 58.4 | 55.6 | 22.2 | 69 | 75 | 9 | 10 | M16 | UC211 | 43000 | 29400 | FL211 | **UCFL211C(E)** | **CUCFL211C(CE)** | 3.2 | 3.3 | 4.3 |
| | **UCFL311** | 250 | 150 | 154 | 52 | 198 | 25 | 20 | 30 | 71 | 66 | 25 | — | 90 | — | 13 | M22 | UC311 | 71500 | 44800 | FL311 | — | **CUCFL311C(CE)** | 5.1 | — | 6.0 |
| 60 | **UCFL212** | 250 | 140 | 144 | 48 | 202 | 23 | 20 | 29 | 68.7 | 65.1 | 25.4 | 80 | 86 | 10 | 11 | M20 | UC212 | 52500 | 36100 | FL212 | **UCFL212C(E)** | **CUCFL212C(CE)** | 4.1 | 4.3 | 5.4 |
| | **UCFL312** | 270 | 160 | 164 | 56 | 212 | 31 | 22 | 33 | 78 | 71 | 26 | — | 98 | — | 14 | M27 | UC312 | 81500 | 52000 | FL312 | — | **CUCFL312C(CE)** | 6.2 | — | 7.3 |

Remarks: 1. Grease nipple: 1/4-28UNF

Remarks: 2. Examples of unit numbers with cover:

With steel cover { Cover with rubber seal :UCFL210C
End cover :UCFL210E

With cast cover { Cover with rubber seal :CUCFL210C
End cover :CUCFL210CE

# Rhombic Flange Units

## UCFL type

### With set screws

### Cylindrical bore

Shaft dia.: 65～140mm

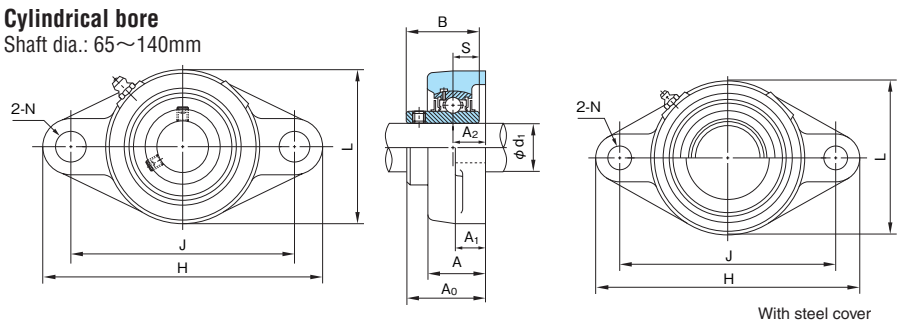


With steel cover

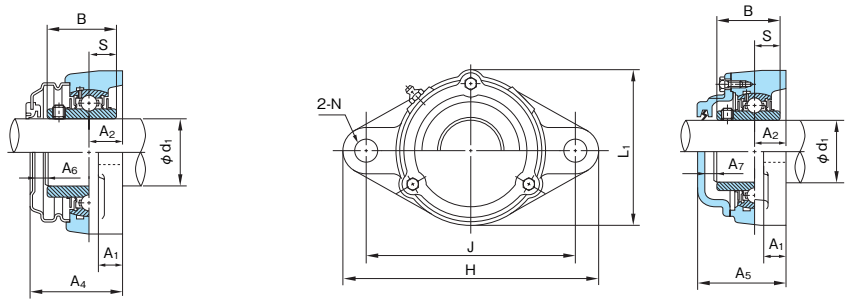


With cast cover

1N=0.102kgf

| Shaft dia. $d_1$ (mm) | Unit No. | Boundary dimensions (mm) | | | | | | | | | | | | | | | Bolt size | Bearings | | | Housing No. | Unit No. with steel cover | Unit No. with cast cover | Mass of Unit (kg) | | |
|---|---|---|---|---|---|---|---|---|---|---|---|---|---|---|---|---|---|---|---|---|---|---|---|---|---|---|
| | | H | L | $L_1$ | A | J | N | $A_1$ | $A_2$ | $A_0$ | B | S | $A_4$ | $A_5$ | $A_6$ | $A_7$ | | No. | Basic load rating (N) Cr | Basic load rating (N) Cor | | Cover with rubber seal (End cover) | Cover with rubber seal (End cover) | standard | With steel cover | With cast cover |
| 65 | **UCFL213** | 258 | 155 | 157 | 50 | 210 | 23 | 24 | 30 | 69.7 | 65.1 | 25.4 | 81 | 89 | 10 | 13 | M20 | UC213 | 57500 | 40000 | FL213 | **UCFL213C(E)** | **CUCFL213C(CE)** | 5.1 | 5.3 | 6.7 |
| | **UCFL313** | 295 | 175 | 186 | 58 | 240 | 31 | 25 | 33 | 78 | 75 | 30 | — | 103 | — | 17 | M27 | UC313 | 92500 | 59700 | FL313 | — | **CUCFL313C(CE)** | 7.4 | — | 9.4 |
| 70 | **UCFL214** | 265 | 160 | 163 | 54 | 216 | 23 | 24 | 31 | 75.4 | 74.6 | 30.2 | — | 98 | — | 16 | M20 | UC214 | 62000 | 44000 | FL214 | — | **CUCFL214C(CE)** | 6.0 | — | 7.4 |
| | **UCFL314** | 315 | 185 | 196 | 61 | 250 | 35 | 28 | 36 | 81 | 78 | 33 | — | 106 | — | 17 | M30 | UC314 | 104000 | 68000 | FL314 | — | **CUCFL314C(CE)** | 9.0 | — | 11.8 |
| 75 | **UCFL215** | 275 | 165 | 168 | 56 | 225 | 23 | 24 | 34 | 78.5 | 77.8 | 33.3 | — | 102 | — | 17 | M20 | UC215 | 66000 | 48200 | FL215 | — | **CUCFL215C(CE)** | 6.5 | — | 7.9 |
| | **UCFL315** | 320 | 195 | 206 | 66 | 260 | 35 | 30 | 39 | 89 | 82 | 32 | — | 114 | — | 17 | M30 | UC315 | 114000 | 76900 | FL315 | — | **CUCFL315C(CE)** | 10.0 | — | 12.2 |
| 80 | **UCFL216** | 290 | 180 | 188 | 58 | 233 | 25 | 24 | 34 | 83.3 | 82.6 | 33.3 | — | 107 | — | 15 | M22 | UC216 | 72500 | 53000 | FL216 | — | **CUCFL216C(CE)** | 8.0 | — | 10.2 |
| | **UCFL316** | 355 | 210 | 218 | 68 | 285 | 38 | 32 | 38 | 90 | 86 | 34 | — | 115 | — | 17 | M33 | UC316 | 123000 | 86400 | FL316 | — | **CUCFL316C(CE)** | 12.6 | — | 15.5 |
| 85 | **UCFL217** | 305 | 190 | 198 | 63 | 248 | 25 | 26 | 36 | 87.6 | 85.7 | 34.1 | — | 111 | — | 15 | M22 | UC217 | 83500 | 61800 | FL217 | — | **CUCFL217C(CE)** | 9.5 | — | 11.8 |
| | **UCFL317** | 370 | 220 | 232 | 74 | 300 | 38 | 32 | 44 | 100 | 96 | 40 | — | 126 | — | 18 | M33 | UC317 | 132000 | 96500 | FL317 | — | **CUCFL317C(CE)** | 14.5 | — | 18.2 |
| 90 | **UCFL218** | 320 | 205 | 211 | 68 | 265 | 25 | 26 | 40 | 96.3 | 96 | 39.7 | — | 122 | — | 17 | M22 | UC218 | 95500 | 71400 | FL218 | — | **CUCFL218C(CE)** | 11.9 | — | 15.0 |
| | **UCFL318** | 385 | 235 | 245 | 76 | 315 | 38 | 36 | 44 | 100 | 96 | 40 | — | 128 | — | 20 | M33 | UC318 | 143000 | 107200 | FL318 | — | **CUCFL318C(CE)** | 17.1 | — | 20.7 |
| 95 | **UCFL319** | 405 | 250 | 257 | 94 | 330 | 41 | 40 | 59 | 121 | 103 | 41 | — | 149 | — | 20 | M36 | UC319 | 153000 | 118400 | FL319 | — | **CUCFL319C(CE)** | 21.8 | — | 25.8 |
| 100 | **UCFL320** | 440 | 270 | 277 | 94 | 360 | 44 | 40 | 59 | 125 | 108 | 42 | — | 154 | — | 21 | M39 | UC320 | 173000 | 140400 | FL320 | — | **CUCFL320C(CE)** | 26.5 | — | 30.6 |
| 105 | **UCFL321** | 440 | 270 | 282 | 94 | 360 | 44 | 40 | 59 | 127 | 112 | 44 | — | 156 | — | 21 | M39 | UC321 | 183000 | 153100 | FL321 | — | **CUCFL321C(CE)** | 28.2 | — | 31.9 |
| 110 | **UCFL322** | 470 | 300 | 305 | 96 | 390 | 44 | 42 | 60 | 131 | 117 | 46 | — | 165 | — | 26 | M39 | UC322 | 205000 | 178800 | FL322 | — | **CUCFL322C(CE)** | 33.1 | — | 38.7 |
| 120 | **UCFL324** | 520 | 330 | 333 | 110 | 430 | 47 | 48 | 65 | 140 | 126 | 51 | — | 175 | — | 25 | M42 | UC324 | 207000 | 184800 | FL324 | — | **CUCFL324C(CE)** | 45.7 | — | 52.4 |
| 130 | **UCFL326** | 550 | 360 | 360 | 115 | 460 | 47 | 50 | 65 | 146 | 135 | 54 | — | 180 | — | 24 | M42 | UC326 | 229000 | 214300 | FL326 | — | **CUCFL326C(CE)** | 57.5 | — | 64.4 |
| 140 | **UCFL328** | 600 | 400 | 400 | 125 | 500 | 51 | 60 | 75 | 161 | 145 | 59 | — | 195 | — | 24 | M45 | UC328 | 255000 | 246000 | FL328 | — | **CUCFL328C(CE)** | 79.7 | — | 86.3 |

Remarks: 1. Grease nipple: 1/4-28UNF for bore number 13 and under
PF1/8 for bore number 14 and over

Remarks: 2. Examples of unit numbers with cover:
With steel cover { Cover with rubber seal :UCFL213C
End cover :UCFL213E
With cast cover { Cover with rubber seal :CUCFL213C
End cover :CUCFL213CE

# Rhombic Flange Units

## UKFL+H type

### With adapter assembly

### Tapered bore

Shaft dia.: 20～65mm

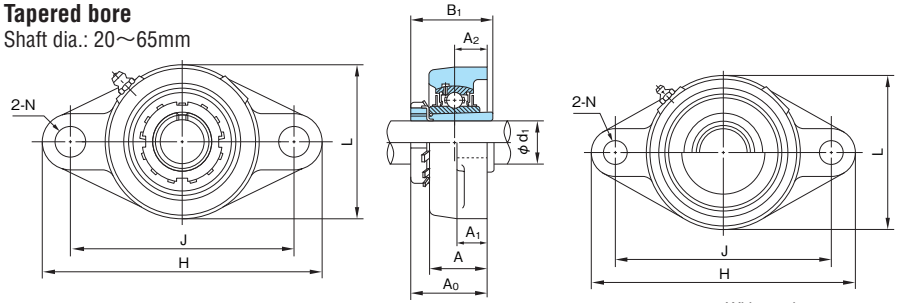


With steel cover

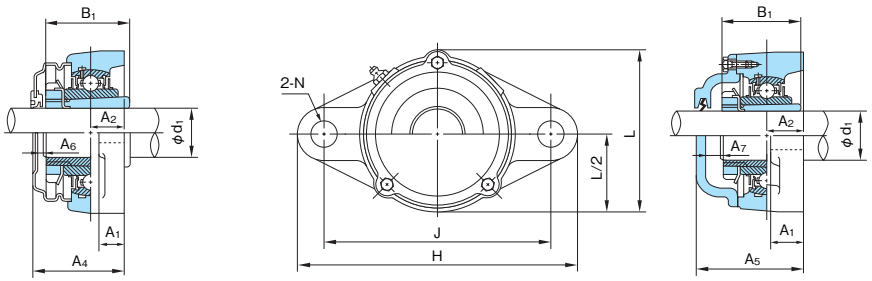


With cast cover

1N=0.102kgf

| Shaft dia. $d_1$ (mm) | Unit No. | Boundary dimensions (mm) | | | | | | | | | | | | | | Bolt size | Bearings | | | Housing No. | Unit No. with steel cover | Unit No. with cast cover | Mass of Unit (kg) | | |
|---|---|---|---|---|---|---|---|---|---|---|---|---|---|---|---|---|---|---|---|---|---|---|---|---|---|
| | | H | L | $L_1$ | A | J | N | $A_1$ | $A_2$ | $A_0$ | $B_1$ | $A_4$ | $A_5$ | $A_6$ | $A_7$ | | No. | Basic load rating (N) Cr | Basic load rating (N) Cor | | Cover with rubber seal (End cover) | Cover with rubber seal (End cover) | standard | With steel cover | With cast cover |
| 20 | **UKFL205+H2305** | 130 | 68 | 73 | 27 | 99 | 16 | 14 | 16 | 35.5 | 35 | 47 | 51 | 10 | 9 | M14 | UK205+H2305 | 14000 | 7900 | FL205 | **UKFL205C(E)+H2305** | **CUKFL205C(CE)+H2305** | 0.68 | 0.72 | 1.1 |
| | **UKFLX05+H2305** | 141 | 83 | — | 30 | 117 | 12 | 13 | 18 | 39 | 35 | 51 | — | 9 | — | M10 | UKX05+H2305 | 19600 | 11300 | FLX05 | **UKFLX05C(E)+H2305** | — | 1.0 | 1.0 | — |
| | **UKFL305+H2305** | 150 | 80 | 84 | 29 | 113 | 19 | 13 | 16 | 37 | 35 | — | 55 | — | 12 | M16 | UK305+H2305 | 21300 | 10900 | FL305 | — | **CUKFL305C(CE)+H2305** | 1.1 | — | 1.5 |
| 25 | **UKFL206+H2306** | 148 | 80 | 84 | 31 | 117 | 16 | 14 | 18 | 39 | 38 | 49 | 55 | 9 | 10 | M14 | UK206+H2306 | 19600 | 11300 | FL206 | **UKFL206C(E)+H2306** | **CUKFL206C(CE)+H2306** | 1.0 | 1.1 | 1.6 |
| | **UKFLX06+H2306** | 156 | 95 | — | 34 | 130 | 16 | 14 | 19 | 40.5 | 38 | 54 | — | 12 | — | M14 | UKX06+H2306 | 25900 | 15400 | FLX06 | **UKFLX06C(E)+H2306** | — | 1.5 | 1.5 | — |
| | **UKFL306+H2306** | 180 | 90 | 94 | 32 | 134 | 23 | 15 | 18 | 40.5 | 38 | — | 60 | — | 13 | M20 | UK306+H2306 | 26800 | 15000 | FL306 | — | **CUKFL306C(CE)+H2306** | 1.5 | — | 2.0 |
| 30 | **UKFL207+H2307** | 161 | 90 | 94 | 34 | 130 | 16 | 16 | 19 | 41.5 | 43 | 54 | 59 | 11 | 11 | M14 | UK207+H2307 | 25900 | 15400 | FL207 | **UKFL207C(E)+H2307** | **CUKFL207C(CE)+H2307** | 1.3 | 1.4 | 2.0 |
| | **UKFLX07+H2307** | 171 | 105 | — | 38 | 144 | 16 | 14 | 21 | 44.5 | 43 | 63 | — | 17 | — | M14 | UKX07+H2307 | 29300 | 17900 | FLX07 | **UKFLX07C(E)+H2307** | — | 1.9 | 2.0 | — |
| | **UKFL307+H2307** | 185 | 100 | 104 | 36 | 141 | 23 | 16 | 20 | 44.5 | 43 | — | 65 | — | 14 | M20 | UK307+H2307 | 33500 | 19200 | FL307 | — | **CUKFL307C(CE)+H2307** | 1.9 | — | 2.4 |
| 35 | **UKFL208+H2308** | 175 | 100 | 104 | 36 | 144 | 16 | 16 | 21 | 45.5 | 46 | 61 | 66 | 14 | 14 | M14 | UK208+H2308 | 29300 | 17900 | FL208 | **UKFL208C(E)+H2308** | **CUKFL208C(CE)+H2308** | 1.7 | 1.8 | 2.4 |
| | **UKFLX08+H2308** | 179 | 111 | — | 40 | 148 | 16 | 14 | 22 | 47 | 46 | 63 | — | 15 | — | M14 | UKX08+H2308 | 33000 | 20500 | FLX08 | **UKFLX08C(E)+H2308** | — | 2.1 | 2.1 | — |
| | **UKFL308+H2308** | 200 | 112 | 118 | 40 | 158 | 23 | 17 | 23 | 50 | 46 | — | 73 | — | 17 | M20 | UK308+H2308 | 40500 | 23900 | FL308 | — | **CUKFL308C(CE)+H2308** | 2.5 | — | 3.0 |
| 40 | **UKFL209+H2309** | 188 | 108 | 113 | 38 | 148 | 19 | 18 | 22 | 48 | 50 | 63 | 67 | 14 | 13 | M16 | UK209+H2309 | 33000 | 20500 | FL209 | **UKFL209C(E)+H2309** | **CUKFL209C(CE)+H2309** | 2.0 | 2.1 | 2.8 |
| | **UKFLX09+H2309** | 189 | 116 | — | 40 | 157 | 16 | 14 | 23 | 49.5 | 50 | 67 | — | 16 | — | M14 | UKX09+H2309 | 35500 | 23200 | FLX09 | **UKFLX09C(E)+H2309** | — | 2.4 | 2.5 | — |
| | **UKFL309+H2309** | 230 | 125 | 132 | 44 | 177 | 25 | 18 | 25 | 54.5 | 50 | — | 78 | — | 17 | M22 | UK309+H2309 | 51500 | 29500 | FL309 | — | **CUKFL309C(CE)+H2309** | 3.4 | — | 4.3 |
| 45 | **UKFL210+H2310** | 197 | 115 | 120 | 40 | 157 | 19 | 18 | 22 | 49.5 | 55 | 66 | 71 | 15 | 15 | M16 | UK210+H2310 | 35500 | 23200 | FL210 | **UKFL210C(E)+H2310** | **CUKFL210C(CE)+H2310** | 2.3 | 2.5 | 3.4 |
| | **UKFLX10+H2310** | 216 | 133 | — | 44 | 184 | 19 | 20 | 26 | 54.5 | 55 | 70 | — | 14 | — | M16 | UKX10+H2310 | 43000 | 29400 | FLX10 | **UKFLX10C(E)+H2310** | — | 3.6 | 3.7 | — |
| | **UKFL310+H2310** | 240 | 140 | 144 | 48 | 187 | 25 | 19 | 28 | 60 | 55 | — | 85 | — | 19 | M22 | UK310+H2310 | 61500 | 38200 | FL310 | — | **CUKFL310C(CE)+H2310** | 4.4 | — | 5.5 |
| 50 | **UKFL211+H2311** | 224 | 130 | 134 | 43 | 184 | 19 | 20 | 25 | 53.5 | 59 | 69 | 75 | 14 | 15 | M16 | UK211+H2311 | 43000 | 29400 | FL211 | **UKFL211C(E)+H2311** | **CUKFL211C(CE)+H2311** | 3.3 | 3.5 | 4.5 |
| | **UKFL311+H2311** | 250 | 150 | 154 | 52 | 198 | 25 | 20 | 30 | 63.5 | 59 | — | 90 | — | 20 | M22 | UK311+H2311 | 71500 | 44800 | FL311 | — | **CUKFL311C(CE)+H2311** | 5.1 | — | 6.1 |
| 55 | **UKFL212+H2312** | 250 | 140 | 144 | 48 | 202 | 23 | 20 | 29 | 60 | 62 | 80 | 86 | 19 | 20 | M20 | UK212+H2312 | 52500 | 36100 | FL212 | **UKFL212C(E)+H2312** | **CUKFL212C(CE)+H2312** | 4.1 | 4.4 | 5.5 |
| | **UKFL312+H2312** | 270 | 160 | 164 | 56 | 212 | 31 | 22 | 33 | 69 | 62 | — | 98 | — | 23 | M27 | UK312+H2312 | 81500 | 52000 | FL312 | — | **CUKFL312C(CE)+H2312** | 6.1 | — | 7.4 |
| 60 | **UKFL213+H2313** | 258 | 155 | 157 | 50 | 210 | 23 | 24 | 30 | 63 | 65 | 81 | 89 | 17 | 20 | M20 | UK213+H2313 | 57500 | 40000 | FL213 | **UKFL213C(E)+H2313** | **CUKFL213C(CE)+H2313** | 5.2 | 5.5 | 6.9 |
| | **UKFL313+H2313** | 295 | 175 | 186 | 58 | 240 | 31 | 25 | 33 | 71 | 65 | — | 103 | — | 24 | M27 | UK313+H2313 | 92500 | 59700 | FL313 | — | **CUKFL313C(CE)+H2313** | 7.4 | — | 9.4 |
| 65 | **UKFL215+H2315** | 275 | 165 | 168 | 56 | 225 | 23 | 24 | 34 | 69.5 | 73 | — | 102 | — | 26 | M20 | UK215+H2315 | 66000 | 48200 | FL215 | — | **CUKFL215C(CE)+H2315** | 6.8 | — | 8.3 |
| | **UKFL315+H2315** | 320 | 195 | 206 | 66 | 260 | 35 | 30 | 39 | 81 | 73 | — | 114 | — | 25 | M30 | UK315+H2315 | 11400 | 76900 | FL315 | — | **CUKFL315C(CE)+H2315** | 10.2 | — | 12.6 |

Remarks: 1. Grease nipple: 1/4-28UNF for bore number 13 and under
PF1/8 for bore number 14 and over

Remarks: 2. Examples of unit numbers with cover:
With steel cover { Cover with rubber seal :UKFL210C+H2310
End cover :UKFL210E+H2310
With cast cover { Cover with rubber seal :CUKFL210C+H2310
End cover :CUKFL210CE+H2310

# Rhombic Flange Units

## UKFL+H type

### With adapter assembly

### Tapered bore

Shaft dia.: 70～125mm

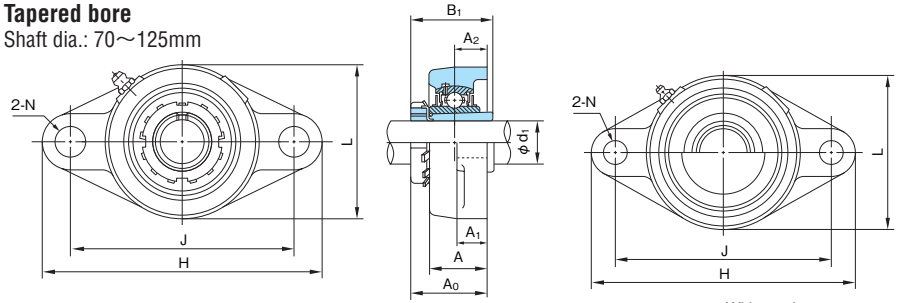


With steel cover

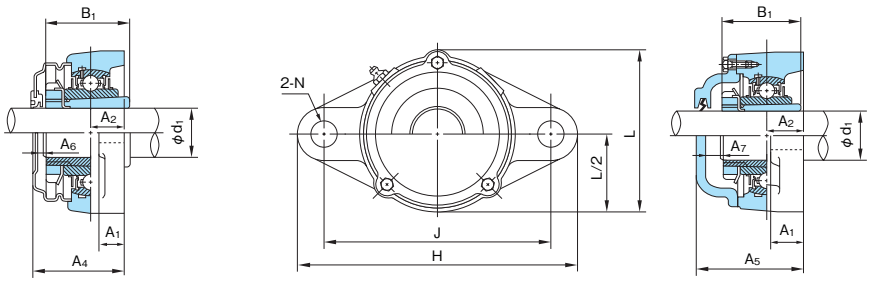


With cast cover

1N=0.102kgf

| Shaft dia. $d_1$ (mm) | Unit No. | Boundary dimensions (mm) | | | | | | | | | | | | | | Bolt size | Bearings | | | | Housing No. | Unit No. with steel cover | Unit No. with cast cover | Mass of Unit (kg) | | |
|---|---|---|---|---|---|---|---|---|---|---|---|---|---|---|---|---|---|---|---|---|---|---|---|---|---|---|
| | | H | L | $L_1$ | A | J | N | $A_1$ | $A_2$ | $A_0$ | $B_1$ | $A_4$ | $A_5$ | $A_6$ | $A_7$ | | No. | Basic load rating (N) Cr | Basic load rating (N) Cor | | | Cover with rubber seal (End cover) | Cover with rubber seal (End cover) | standard | With steel cover | With cast cover |
| 70 | **UKFL216+H2316** | 290 | 180 | 188 | 58 | 233 | 25 | 24 | 34 | 73 | 78 | — | 107 | — | 26 | M22 | UK216+H2316 | 72500 | 53000 | | FL216 | — | **CUKFL216C(CE)+H2316** | 8.4 | — | 10.6 |
| | **UKFL316+H2316** | 355 | 210 | 218 | 68 | 285 | 38 | 32 | 38 | 83.5 | 78 | — | 115 | — | 23 | M33 | UK316+H2316 | 123000 | 86400 | | FL316 | — | **CUKFL316C(CE)+H2316** | 12.8 | — | 15.9 |
| 75 | **UKFL217+H2317** | 305 | 190 | 198 | 63 | 248 | 25 | 26 | 36 | 77 | 82 | — | 111 | — | 26 | M22 | UK217+H2317 | 83500 | 61800 | | FL217 | — | **CUKFL217C(CE)+H2317** | 10.0 | — | 12.4 |
| | **UKFL317+H2317** | 370 | 220 | 232 | 74 | 300 | 38 | 32 | 44 | 92 | 82 | — | 126 | — | 26 | M33 | UK317+H2317 | 132000 | 96500 | | FL317 | — | **CUKFL317C(CE)+H2317** | 14.5 | — | 18.4 |
| 80 | **UKFL218+H2318** | 320 | 205 | 211 | 68 | 265 | 25 | 26 | 40 | 82.5 | 86 | — | 122 | — | 31 | M22 | UK218+H2318 | 95500 | 71400 | | FL218 | — | **CUKFL218C(CE)+H2318** | 12.3 | — | 15.4 |
| | **UKFL318+H2318** | 385 | 235 | 245 | 76 | 315 | 38 | 36 | 44 | 93.5 | 86 | — | 128 | — | 26 | M33 | UK318+H2318 | 143000 | 107200 | | FL318 | — | **CUKFL318C(CE)+H2318** | 17.2 | — | 21.7 |
| 85 | **UKFL319+H2319** | 405 | 250 | 257 | 94 | 330 | 41 | 40 | 59 | 111 | 90 | — | 149 | — | 30 | M36 | UK319+H2319 | 153000 | 118400 | | FL319 | — | **CUKFL319C(CE)+H2319** | 21.8 | — | 26.0 |
| 90 | **UKFL320+H2320** | 440 | 270 | 277 | 94 | 360 | 44 | 40 | 59 | 115 | 97 | — | 154 | — | 31 | M39 | UK320+H2320 | 173000 | 140400 | | FL320 | — | **CUKFL320C(CE)+H2320** | 26.5 | — | 31.2 |
| 100 | **UKFL322+H2322** | 470 | 300 | 305 | 96 | 390 | 44 | 42 | 60 | 121 | 105 | — | 165 | — | 36 | M39 | UK322+H2322 | 205000 | 178800 | | FL322 | — | **CUKFL322C(CE)+H2322** | 33.2 | — | 39.4 |
| 110 | **UKFL324+H2324** | 520 | 330 | 333 | 110 | 430 | 47 | 48 | 65 | 130 | 112 | — | 175 | — | 35 | M42 | UK324+H2324 | 207000 | 184800 | | FL324 | — | **CUKFL324C(CE)+H2324** | 45.2 | — | 52.6 |
| 115 | **UKFL326+H2326** | 550 | 360 | 360 | 115 | 460 | 47 | 50 | 65 | 134 | 121 | — | 180 | — | 36 | M42 | UK326+H2326 | 229000 | 214300 | | FL326 | — | **CUKFL326C(CE)+H2326** | 57.8 | — | 65.9 |
| 125 | **UKFL328+H2328** | 600 | 400 | 400 | 125 | 500 | 51 | 60 | 75 | 148 | 131 | — | 195 | — | 37 | M45 | UK328+H2328 | 255000 | 246000 | | FL328 | — | **CUKFL328C(CE)+H2328** | 80.0 | — | 87.8 |

Remarks: 1. Grease nipple: PF1/8

Remarks: 2. Examples of unit numbers with cover:

With cast cover { Cover with rubber seal :CUKFL320C+H2320
End cover :CUKFL320CE+H2320

NACHI

# Rhombic Flange Units

## BFL type

### With set screws

### Cylindrical bore

Shaft dia.: 20～35mm

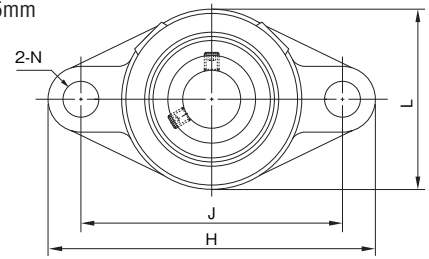


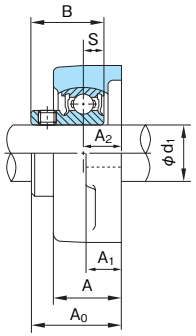


1N=0.102kgf

| Shaft dia. $d_1$ (mm) | Unit No. | Boundary dimensions (mm) | | | | | | | | | | Bolt size | | Bearings | | | Housing No. | Mass of Unit (kg) |
|---|---|---|---|---|---|---|---|---|---|---|---|---|---|---|---|---|---|---|
| | | H | L | A | J | N | $A_1$ | $A_2$ | $A_0$ | B | S | | | No. | Basic load rating (N) Cr | Basic load rating (N) Cor | | |
| **20** | **BFL204** | 113 | 60 | 25.5 | 90 | 12 | 12 | 15 | 32.7 | 24.7 | 7 | M10 | | B4 | 12800 | 6600 | FL204 G00 | 0.41 |
| **25** | **BFL205** | 130 | 68 | 27 | 99 | 16 | 14 | 16 | 36.2 | 27 | 7.5 | M14 | | B5 | 14000 | 7900 | FL205 G00 | 0.60 |
| **30** | **BFL206** | 148 | 80 | 31 | 117 | 16 | 14 | 18 | 40.3 | 30.3 | 8 | M14 | | B6 | 19600 | 11300 | FL206 G00 | 0.88 |
| **35** | **BFL207** | 161 | 90 | 34 | 130 | 16 | 16 | 19 | 43.4 | 32.9 | 8.5 | M14 | | B7 | 25900 | 15400 | FL207 G00 | 1.2 |

NACHI

# Rhombic Flange Units

## UGFL type

### With eccentric collar

### Cylindrical bore

Shaft dia.: 20～60mm

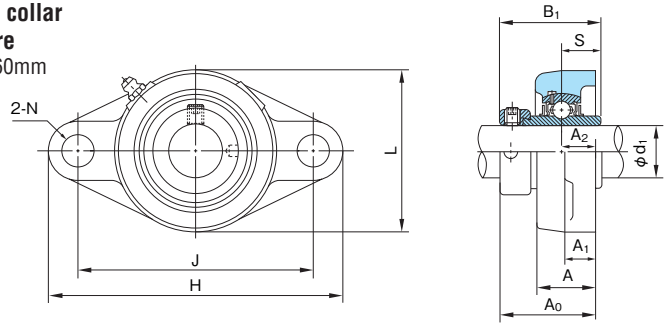


1N=0.102kgf

| Shaft dia. $d_1$ (mm) | Unit No. | Boundary dimensions (mm) | | | | | | | | | | Bolt size | | Bearings | | | Housing No. | Mass of Unit (kg) |
|---|---|---|---|---|---|---|---|---|---|---|---|---|---|---|---|---|---|---|
| | | H | L | A | J | N | $A_1$ | $A_2$ | $A_0$ | $B_1$ | S | | | No. | Basic load rating (N) Cr | Basic load rating (N) Cor | | |
| **20** | **UGFL204** | 113 | 60 | 25.5 | 90 | 12 | 12 | 15 | 41.6 | 43.7 | 17.1 | M10 | | UG204+ER | 12800 | 6600 | FL204 | 0.47 |
| **25** | **UGFL205** | 130 | 68 | 27 | 99 | 16 | 14 | 16 | 42.9 | 44.4 | 17.5 | M14 | | UG205+ER | 14000 | 7900 | FL205 | 0.63 |
| **30** | **UGFL206** | 148 | 80 | 31 | 117 | 16 | 14 | 18 | 48.1 | 48.4 | 18.3 | M14 | | UG206+ER | 19600 | 11300 | FL206 | 0.96 |
| **35** | **UGFL207** | 161 | 90 | 34 | 130 | 16 | 16 | 19 | 51.3 | 51.1 | 18.8 | M14 | | UG207+ER | 25900 | 15400 | FL207 | 1.3 |
| **40** | **UGFL208** | 175 | 100 | 36 | 144 | 16 | 16 | 21 | 55.9 | 56.3 | 21.4 | M14 | | UG208+ER | 29300 | 17900 | FL208 | 1.7 |
| **45** | **UGFL209** | 188 | 108 | 38 | 148 | 19 | 18 | 22 | 56.9 | 56.3 | 21.4 | M16 | | UG209+ER | 33000 | 20500 | FL209 | 2.0 |
| **50** | **UGFL210** | 197 | 115 | 40 | 157 | 19 | 18 | 22 | 60.1 | 62.7 | 24.6 | M16 | | UG210+ER | 35500 | 23200 | FL210 | 2.3 |
| **55** | **UGFL211** | 224 | 130 | 43 | 184 | 19 | 20 | 25 | 68.6 | 71.4 | 27.8 | M16 | | UG211+ER | 43000 | 29400 | FL211 | 3.4 |
| **60** | **UGFL212** | 250 | 140 | 48 | 202 | 23 | 20 | 29 | 75.8 | 77.8 | 31 | M20 | | UG212+ER | 52500 | 36100 | FL212 | 4.4 |

Remark: Grease nipple: 1/4-28UNF

# Rhombic Flange Units

## BLFL type
**With set screws**
**Cylindrical bore**
Shaft dia.: 12～35mm

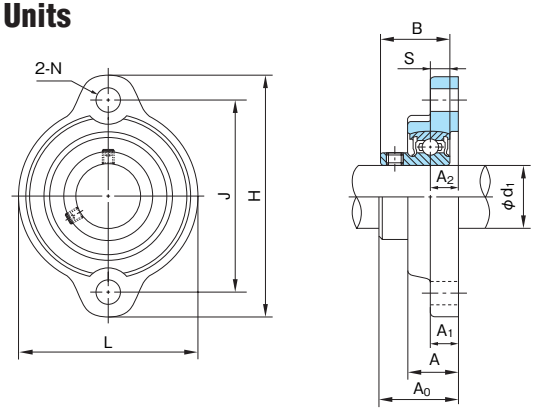


## KHLFL type
**With eccentric collar**
**Cylindrical bore**
Shaft dia.: 12～35mm

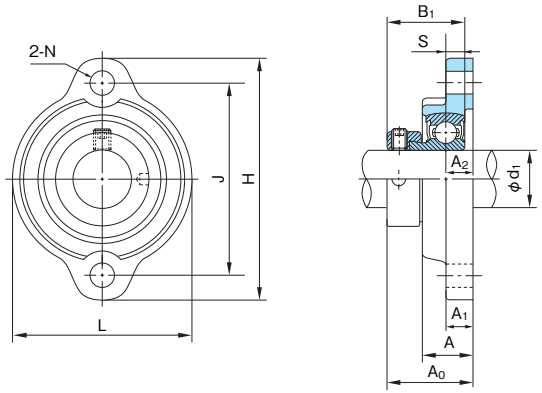


## BLFL type

1N=0.102kgf

| Shaft dia. $d_1$ (mm) | Unit No. | Boundary dimensions (mm) | | | | | | | | | | Bolt size | | Bearings | | | Housing No. | Mass of Unit (kg) |
|---|---|---|---|---|---|---|---|---|---|---|---|---|---|---|---|---|---|---|
| | | H | L | A | J | N | $A_1$ | $A_2$ | $A_0$ | B | S | | | No. | Basic load rating (N) Cr | Basic load rating (N) Cor | | |
| 12 | BLFL1J | 81 | 56 | 18 | 63.5 | 7 | 9.5 | 9.5 | 25.5 | 22 | 6 | M 6 | | B1 | 9550 | 4800 | LFL3J | 0.28 |
| 15 | BLFL2J | 81 | 56 | 18 | 63.5 | 7 | 9.5 | 9.5 | 25.5 | 22 | 6 | M 6 | | B2 | 9550 | 4800 | LFL3J | 0.27 |
| 17 | BLFL3J | 81 | 56 | 18 | 63.5 | 7 | 9.5 | 9.5 | 25.5 | 22 | 6 | M 6 | | B3 | 9550 | 4800 | LFL3J | 0.25 |
| 20 | BLFL4J | 90 | 63 | 20 | 71.5 | 10 | 11 | 11 | 28.7 | 24.7 | 7 | M 8 | | B4 | 12800 | 6600 | LFL4J | 0.30 |
| 25 | BLFL5J | 95 | 69 | 20 | 76 | 10 | 11 | 11 | 31.2 | 27 | 7.5 | M 8 | | B5 | 14000 | 7900 | LFL5J | 0.40 |
| 30 | BLFL6J | 113 | 79 | 22.5 | 90.5 | 12 | 12 | 12 | 34.3 | 30.3 | 8 | M10 | | B6 | 19600 | 11300 | LFL6J | 0.58 |
| 35 | BLFL7J | 122 | 89 | 24 | 100 | 12 | 13 | 13 | 37.4 | 32.9 | 8.5 | M10 | | B7 | 25900 | 15400 | LFL7J | 0.81 |

Remark: Spherical bearing seating diameter of housing is applied tolerance class J7.

## KHLFL type

1N=0.102kgf

| Shaft dia. $d_1$ (mm) | Unit No. | Boundary dimensions (mm) | | | | | | | | | | Bolt size | | Bearings | | | Housing No. | Mass of Unit (kg) |
|---|---|---|---|---|---|---|---|---|---|---|---|---|---|---|---|---|---|---|
| | | H | L | A | J | N | $A_1$ | $A_2$ | $A_0$ | $B_1$ | S | | | No. | Basic load rating (N) Cr | Basic load rating (N) Cor | | |
| 12 | KHLFL201AJ | 81 | 56 | 18 | 63.5 | 7 | 9.5 | 9.5 | 31.6 | 28.6 | 6.5 | M 6 | | KH201AE | 9550 | 4800 | LFL3J | 0.30 |
| 15 | KHLFL202AJ | 81 | 56 | 18 | 63.5 | 7 | 9.5 | 9.5 | 31.6 | 28.6 | 6.5 | M 6 | | KH202AE | 9550 | 4800 | LFL3J | 0.29 |
| 17 | KHLFL203AJ | 81 | 56 | 18 | 63.5 | 7 | 9.5 | 9.5 | 31.6 | 28.6 | 6.5 | M 6 | | KH203AE | 9550 | 4800 | LFL3J | 0.28 |
| 20 | KHLFL204AJ | 90 | 63 | 20 | 71.5 | 10 | 11 | 11 | 34.5 | 31 | 7.5 | M 8 | | KH204AE | 12800 | 6600 | LFL4J | 0.34 |
| 25 | KHLFL205AJ | 95 | 69 | 20 | 76 | 10 | 11 | 11 | 34.5 | 31 | 7.5 | M 8 | | KH205AE | 14000 | 7900 | LFL5J | 0.44 |
| 30 | KHLFL206AJ | 113 | 79 | 22.5 | 90.5 | 12 | 12 | 12 | 38.7 | 35.7 | 9 | M10 | | KH206AE | 19600 | 11300 | LFL6J | 0.64 |
| 35 | KHLFL207AJ | 122 | 89 | 24 | 100 | 12 | 13 | 13 | 42.4 | 38.9 | 9.5 | M10 | | KH207AE | 25900 | 15400 | LFL7J | 0.92 |

Remark: Spherical bearing seating diameter of housing is applied tolerance class J7.

NACHI

# Rhombic Flange Units

## Cast Stainless Steel
## MUCFL type
### With set screws
### Cylindrical bore
Shaft dia.: 20～50mm

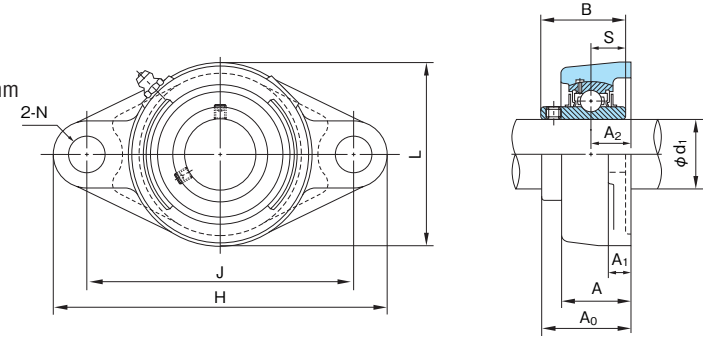


1N=0.102kgf

| Shaft dia. $d_1$ (mm) | Unit No. | Boundary dimensions (mm) | | | | | | | | | | Bolt size | | Bearings | | | Housing No. | Mass of Unit (kg) |
|---|---|---|---|---|---|---|---|---|---|---|---|---|---|---|---|---|---|---|
| | | H | L | A | J | N | $A_1$ | $A_2$ | $A_0$ | B | S | | | No. | Basic load rating (N) Cr | Basic load rating (N) Cor | | |
| **20** | **MUCFL204** | 113 | 60 | 25.5 | 90 | 12 | 10 | 15 | 33.3 | 31 | 12.7 | M10 | | MUC204 | 10900 | 5300 | MFL204 | 0.35 |
| **25** | **MUCFL205** | 130 | 68 | 27 | 99 | 16 | 10 | 16 | 35.7 | 34 | 14.3 | M14 | | MUC205 | 11900 | 6300 | MFL205 | 0.50 |
| **30** | **MUCFL206** | 148 | 80 | 31 | 117 | 16 | 10 | 18 | 40.2 | 38.1 | 15.9 | M14 | | MUC206 | 16700 | 9050 | MFL206 | 0.80 |
| **35** | **MUCFL207** | 161 | 90 | 34 | 130 | 16 | 11 | 19 | 44.4 | 42.9 | 17.5 | M14 | | MUC207 | 22000 | 12300 | MFL207 | 1.05 |
| **40** | **MUCFL208** | 175 | 100 | 36 | 144 | 16 | 11 | 21 | 51.2 | 49.2 | 19 | M14 | | MUC208 | 24900 | 14300 | MFL208 | 1.35 |
| **45** | **MUCFL209** | 188 | 108 | 38 | 148 | 19 | 13 | 22 | 52.2 | 49.2 | 19 | M16 | | MUC204 | 28100 | 16400 | MFL209 | 1.65 |
| **50** | **MUCFL210** | 197 | 115 | 40 | 157 | 19 | 13 | 22 | 54.6 | 51.6 | 19 | M16 | | MUC210 | 30200 | 18600 | MFL210 | 1.90 |

Remark: Grease nipple: 1/4-28UNF

# Silver series

## Rhombic Flange Units

### UFL type

**With eccentric collar**

**Cylindrical bore**

Shaft dia.: 8～30mm

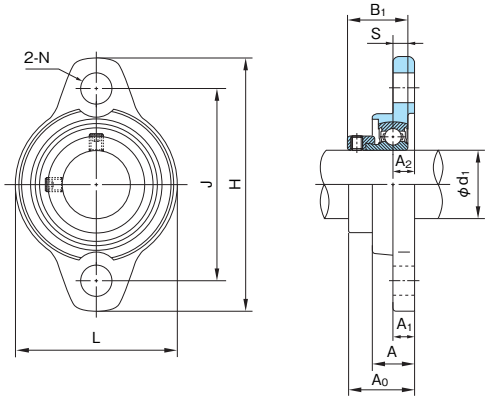


### MUFL type (Stainless Silver Series)

**With eccentric collar**

**Cylindrical bore**

Shaft dia.: 10～30mm

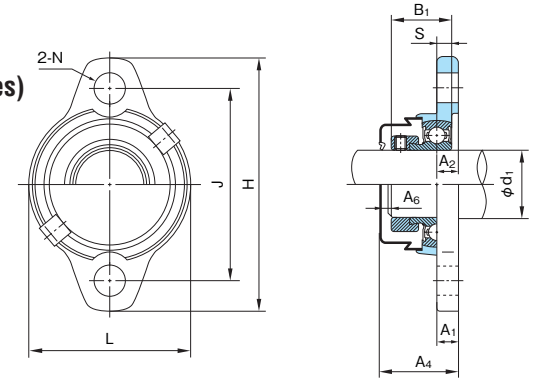


With steel covers

## UFL type

1N=0.102kgf

| Shaft dia. $d_1$ (mm) | Unit No. | Boundary dimensions (mm) | | | | | | | | | | | | Bolt size | Bearings | | | Housing No. | Unit No. with covers | Cover No. (Reference) | | Mass of Unit (kg) | |
|---|---|---|---|---|---|---|---|---|---|---|---|---|---|---|---|---|---|---|---|---|---|---|---|
| | | H | L | A | J | N | $A_1$ | $A_2$ | $A_0$ | $B_1$ | S | $A_4$ | $A_6$ | | No. | Basic load rating (N) Cr | Basic load rating (N) Cor | | Cover with rubber seal (End cover) | Cover with rubber seal | Side end cover | standard | with cover |
| 10 | **UFL000** | 60 | 36 | 11.5 | 45 | 7 | 5.5 | 5.5 | 19 | 17.5 | 4 | 22 | 2 | M 6 | U000+ER | 4600 | 2000 | FL000 | **UFL000C(E)** | 000CP10 | 000CPE | 60 | 65 |
| 12 | **UFL001** | 63 | 38 | 11.5 | 48 | 7 | 5.5 | 5.5 | 19 | 17.5 | 4 | 22 | 2 | M 6 | U001+ER | 5100 | 2400 | FL001 | **UFL001C(E)** | 001CP12 | 001CPE | 76 | 80 |
| 15 | **UFL002** | 67 | 42 | 13 | 53 | 7 | 6.5 | 6.5 | 20.5 | 18.5 | 4.5 | 24 | 2 | M 6 | U002+ER | 5600 | 2800 | FL002 | **UFL002C(E)** | 002CP15 | 002CPE | 100 | 105 |
| 17 | **UFL003** | 71 | 46 | 14 | 56 | 7 | 7 | 7 | 22.5 | 20.5 | 5 | 26 | 2 | M 6 | U003+ER | 6000 | 3300 | FL003 | **UFL003C(E)** | 003CP17 | 003CPE | 129 | 135 |
| 20 | **UFL004** | 90 | 55 | 16 | 71 | 10 | 8 | 8 | 26.5 | 24.5 | 6 | 31 | 3 | M 8 | U004+ER | 9350 | 5100 | FL04-5 | **UFL004C(E)** | 04-5CP20 | 04-5CPE | 205 | 215 |
| 25 | **UFL005** | 95 | 60 | 16 | 75 | 10 | 8 | 8 | 27.5 | 25.5 | 6 | 32 | 3 | M 8 | U005+ER | 10100 | 5800 | FL05-6 | **UFL005C(E)** | 05-6CP25 | 05-6CPE | 244 | 255 |
| 30 | **UFL006** | 112 | 70 | 18 | 85 | 13 | 9 | 9 | 29 | 26.5 | 6.5 | 34 | 4 | M10 | U006+ER | 13200 | 8300 | FL06-7 | **UFL006C(E)** | 06-7CP30 | 06-7CPE | 354 | 370 |
| 8 | **UFL 08** | 48 | 27 | 8.5 | 37 | 4.8 | 4 | 4.5 | 16 | 15 | 3.5 | — | — | M 4 | U 08+ER(1) | 3300 | 1360 | FL08 | — | — | — | 30 | — |

Note: (1) Set screw type U08X is also available. Inner ring width B of U08X is 12mm. Dimension $A_0$ with U08X is 13mm.

Remark: Examples of unit numbers with cover: Both covers with rubber seal : UFL005C
One side end cover : UFL005E

## MUFL type (Stainless Silver Series)

1N=0.102kgf

| Shaft dia. $d_1$ (mm) | Unit No. | Boundary dimensions (mm) | | | | | | | | | | | | Bolt size | Bearings | | | Housing No. | Unit No. with covers | Cover No. (Reference) | | Mass of Unit (kg) | |
|---|---|---|---|---|---|---|---|---|---|---|---|---|---|---|---|---|---|---|---|---|---|---|---|
| | | H | L | A | J | N | $A_1$ | $A_2$ | $A_0$ | $B_1$ | S | $A_4$ | $A_6$ | | No. | Basic load rating (N) Cr | Basic load rating (N) Cor | | Cover with rubber seal (End cover) | Cover with rubber seal | Side end cover | standard | with cover |
| 10 | **MUFL000** | 60 | 36 | 11.5 | 45 | 7 | 5.5 | 5.5 | 19 | 17.5 | 4 | 22 | 2 | M 6 | MU000+ER | 3900 | 1550 | FL000Z3 | **MUFL000C(E)** | 000CP10 | 000CPE | 60 | 65 |
| 12 | **MUFL001** | 63 | 38 | 11.5 | 48 | 7 | 5.5 | 5.5 | 19 | 17.5 | 4 | 22 | 2 | M 6 | MU001+ER | 4300 | 1900 | FL001Z3 | **MUFL001C(E)** | 001CP12 | 001CPE | 76 | 80 |
| 15 | **MUFL002** | 67 | 42 | 13 | 53 | 7 | 6.5 | 6.5 | 20.5 | 18.5 | 4.5 | 24 | 2 | M 6 | MU002+ER | 4750 | 2250 | FL002Z3 | **MUFL002C(E)** | 002CP15 | 002CPE | 100 | 105 |
| 17 | **MUFL003** | 71 | 46 | 14 | 56 | 7 | 7 | 7 | 22.5 | 20.5 | 5 | 26 | 2 | M 6 | MU003+ER | 5100 | 2650 | FL003Z3 | **MUFL003C(E)** | 003CP17 | 003CPE | 129 | 135 |
| 20 | **MUFL004** | 90 | 55 | 16 | 71 | 10 | 8 | 8 | 26.5 | 24.5 | 6 | 31 | 3 | M 8 | MU004+ER | 7900 | 4000 | FL04-5Z3 | **MUFL004C(E)** | 04-5CP20 | 04-5CPE | 205 | 215 |
| 25 | **MUFL005** | 95 | 60 | 16 | 75 | 10 | 8 | 8 | 27.5 | 25.5 | 6 | 32 | 3 | M 8 | MU005+ER | 8600 | 4650 | FL05-6Z3 | **MUFL005C(E)** | 05-6CP25 | 05-6CPE | 244 | 255 |
| 30 | **MUFL006** | 112 | 70 | 18 | 85 | 13 | 9 | 9 | 29 | 26.5 | 6.5 | 34 | 4 | M10 | MU006+ER | 11300 | 6600 | FL06-7Z3 | **MUFL006C(E)** | 06-7CP30 | 06-7CPE | 354 | 370 |

Remark: Examples of unit numbers with cover: Cover with rubber seal : MUFL005C
One side end cover : MUFL005E

# Pressed Steel Round Flange Units

## BPF type
**With set screws**
**Cylindrical bore**
Shaft dia.: 12～35mm

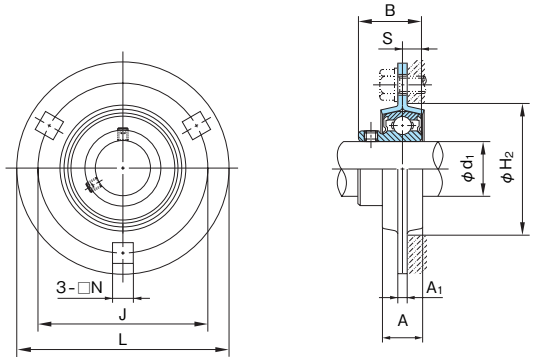


## KHPF type
**With eccentric collar**
**Cylindrical bore**
Shaft dia.: 12～35mm

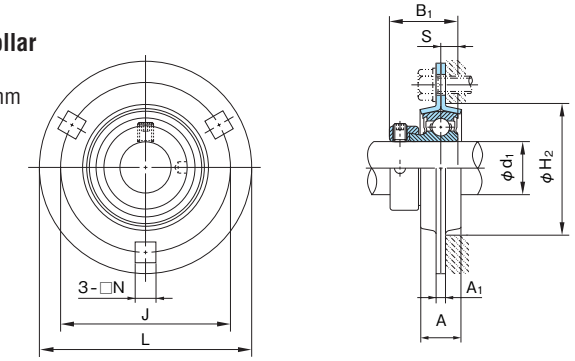


## BPF type

1N=0.102kgf

| Shaft dia. $d_1$ (mm) | Unit No. | Boundary dimensions (mm) | | | | | | | | Bolt size | | Bearings | | | Housing No. | Mass of Unit (kg) | Limiting load (N) | |
|---|---|---|---|---|---|---|---|---|---|---|---|---|---|---|---|---|---|---|
| | | L | A | J | N | $A_1$ | $H_2$ (Min) | B | S | | | No. | Basic load rating (N) Cr | Basic load rating (N) Cor | | | Radial | Axial |
| 12 | BPF1 | 81 | 14 | 63.5 | 7 | 4 | 49 | 22 | 6 | M 6 | | B1 | 9550 | 4800 | PF3 | 0.21 | 2650 | 1320 |
| 15 | BPF2 | 81 | 14 | 63.5 | 7 | 4 | 49 | 22 | 6 | M 6 | | B2 | 9550 | 4800 | PF3 | 0.20 | 2650 | 1320 |
| 17 | BPF3 | 81 | 14 | 63.5 | 7 | 4 | 49 | 22 | 6 | M 6 | | B3 | 9550 | 4800 | PF3 | 0.18 | 2650 | 1320 |
| 20 | BPF4 | 90 | 16 | 71.5 | 9 | 4 | 56 | 24.7 | 7 | M 8 | | B4 | 12800 | 6600 | PF4 | 0.25 | 3100 | 1520 |
| 25 | BPF5 | 95 | 18 | 76 | 9 | 4 | 60 | 27 | 7.5 | M 8 | | B5 | 14000 | 7900 | PF5 | 0.35 | 3550 | 1750 |
| 30 | BPF6 | 113 | 18 | 90.5 | 11 | 5.2 | 71 | 30.3 | 8 | M10 | | B6 | 19600 | 11300 | PF6 | 0.54 | 4900 | 2450 |
| 35 | BPF7 | 122 | 20 | 100 | 11 | 5.2 | 81 | 32.9 | 8.5 | M10 | | B7 | 25900 | 15400 | PF7 | 0.71 | 6200 | 3100 |

## KHPF type

1N=0.102kgf

| Shaft dia. $d_1$ (mm) | Unit No. | Boundary dimensions (mm) | | | | | | | | Bolt size | | Bearings | | | Housing No. | Mass of Unit (kg) | Limiting load (N) | |
|---|---|---|---|---|---|---|---|---|---|---|---|---|---|---|---|---|---|---|
| | | L | A | J | N | $A_1$ | $H_2$ (Min) | $B_1$ | S | | | No. | Basic load rating (N) Cr | Basic load rating (N) Cor | | | Radial | Axial |
| 12 | KHPF201A | 81 | 14 | 63.5 | 7 | 4 | 49 | 28.6 | 6.5 | M 6 | | KH201AE | 9550 | 4800 | PF3 | 0.23 | 2650 | 1320 |
| 15 | KHPF202A | 81 | 14 | 63.5 | 7 | 4 | 49 | 28.6 | 6.5 | M 6 | | KH202AE | 9550 | 4800 | PF3 | 0.22 | 2650 | 1320 |
| 17 | KHPF203A | 81 | 14 | 63.5 | 7 | 4 | 49 | 28.6 | 6.5 | M 6 | | KH203AE | 9550 | 4800 | PF3 | 0.21 | 2650 | 1320 |
| 20 | KHPF204A | 90 | 16 | 71.5 | 9 | 4 | 56 | 31 | 7.5 | M 8 | | KH204AE | 12800 | 6600 | PF4 | 0.29 | 3100 | 1520 |
| 25 | KHPF205A | 95 | 18 | 76 | 9 | 4 | 60 | 31 | 7.5 | M 8 | | KH205AE | 14000 | 7900 | PF5 | 0.39 | 3550 | 1750 |
| 30 | KHPF206A | 113 | 18 | 90.5 | 11 | 5.2 | 71 | 35.7 | 9 | M10 | | KH206AE | 19600 | 11300 | PF6 | 0.60 | 4900 | 2450 |
| 35 | KHPF207A | 122 | 20 | 100 | 11 | 5.2 | 81 | 38.9 | 9.5 | M10 | | KH207AE | 25900 | 15400 | PF7 | 0.82 | 6200 | 3100 |

# Pressed Steel Rhombic Flange Units

## BPFL type
**With set screws**
**Cylindrical bore**
Shaft dia.: 12～35mm

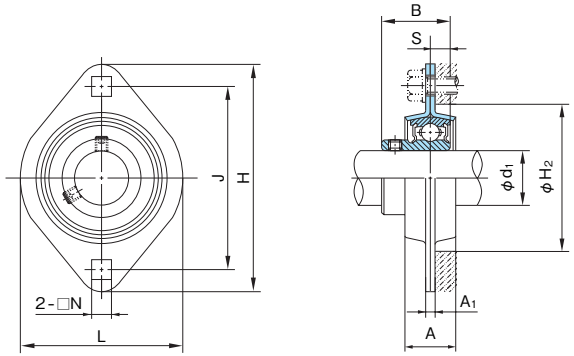


## KHPFL type
**With eccentric collar**
**Cylindrical bore**
Shaft dia.: 12～35mm

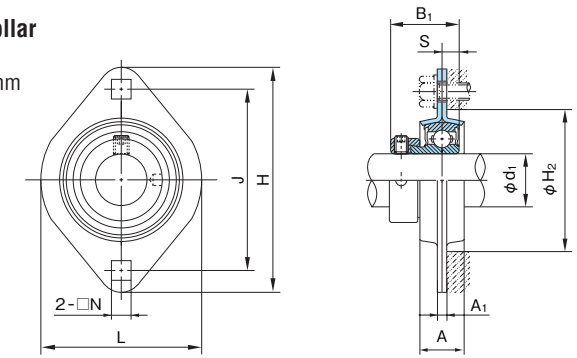


## BPFL type

1N=0.102kgf

| Shaft dia. $d_1$ (mm) | Unit No. | Boundary dimensions (mm) | | | | | | | | | Bolt size | Bearings | | | Housing No. | Mass of Unit (kg) | Limiting load (N) | |
|---|---|---|---|---|---|---|---|---|---|---|---|---|---|---|---|---|---|---|
| | | H | L | A | J | N | $A_1$ | $H_2$ | B | S | | No. | Basic load rating (N) Cr | Basic load rating (N) Cor | | | Radial | Axial |
| 12 | BPFL1 | 81 | 59 | 14 | 63.5 | 7 | 4 | 49 | 22 | 6 | M 6 | B1 | 9550 | 4800 | PFL3 | 0.25 | 2650 | 640 |
| 15 | BPFL2 | 81 | 59 | 14 | 63.5 | 7 | 4 | 49 | 22 | 6 | M 6 | B2 | 9550 | 4800 | PFL3 | 0.24 | 2650 | 640 |
| 17 | BPFL3 | 81 | 59 | 14 | 63.5 | 7 | 4 | 49 | 22 | 6 | M 6 | B3 | 9550 | 4800 | PFL3 | 0.22 | 2650 | 640 |
| 20 | BPFL4 | 90 | 67 | 16 | 71.5 | 9 | 4 | 56 | 24.7 | 7 | M 8 | B4 | 12800 | 6600 | PFL4 | 0.29 | 3100 | 740 |
| 25 | BPFL5 | 95 | 71 | 18 | 76 | 9 | 4 | 60 | 27 | 7.5 | M 8 | B5 | 14000 | 7900 | PFL5 | 0.36 | 3550 | 900 |
| 30 | BPFL6 | 113 | 84 | 18 | 90.5 | 11 | 5.2 | 71 | 30.3 | 8 | M10 | B6 | 19600 | 11300 | PFL6 | 0.56 | 4900 | 1200 |
| 35 | BPFL7 | 125 | 94 | 20 | 100 | 11 | 5.2 | 81 | 32.9 | 8.5 | M10 | B7 | 25900 | 15400 | PFL7 | 0.70 | 6200 | 1500 |

## KHPFL type

1N=0.102kgf

| Shaft dia. $d_1$ (mm) | Unit No. | Boundary dimensions (mm) | | | | | | | | | Bolt size | Bearings | | | Housing No. | Mass of Unit (kg) | Limiting load (N) | |
|---|---|---|---|---|---|---|---|---|---|---|---|---|---|---|---|---|---|---|
| | | H | L | A | J | N | $A_1$ | $H_2$ | $B_1$ | S | | No. | Basic load rating (N) Cr | Basic load rating (N) Cor | | | Radial | Axial |
| 12 | KHPFL201A | 81 | 59 | 14 | 63.5 | 7 | 4 | 49 | 28.6 | 6.5 | M 6 | KH201AE | 9550 | 4800 | PFL3 | 0.27 | 2650 | 640 |
| 15 | KHPFL202A | 81 | 59 | 14 | 63.5 | 7 | 4 | 49 | 28.6 | 6.5 | M 6 | KH202AE | 9550 | 4800 | PFL3 | 0.26 | 2650 | 640 |
| 17 | KHPFL203A | 81 | 59 | 14 | 63.5 | 7 | 4 | 49 | 28.6 | 6.5 | M 6 | KH203AE | 9550 | 4800 | PFL3 | 0.25 | 2650 | 640 |
| 20 | KHPFL204A | 90 | 67 | 16 | 71.5 | 9 | 4 | 56 | 31 | 7.5 | M 8 | KH204AE | 12800 | 6600 | PFL4 | 0.33 | 3100 | 740 |
| 25 | KHPFL205A | 95 | 71 | 18 | 76 | 9 | 4 | 60 | 31 | 7.5 | M 8 | KH205AE | 14000 | 7900 | PFL5 | 0.40 | 3550 | 900 |
| 30 | KHPFL206A | 113 | 84 | 18 | 90.5 | 11 | 5.2 | 71 | 35.7 | 9 | M10 | KH206AE | 19600 | 11300 | PFL6 | 0.62 | 4900 | 1200 |
| 35 | KHPFL207A | 125 | 94 | 20 | 100 | 11 | 5.2 | 81 | 38.9 | 9.5 | M10 | KH207AE | 25900 | 15400 | PFL7 | 0.81 | 6200 | 1500 |

NACHI

# Transformed Rhombic Flange Units

## UCFA type

### With set screws

### Cylindrical bore

Shaft dia.:
12～55mm

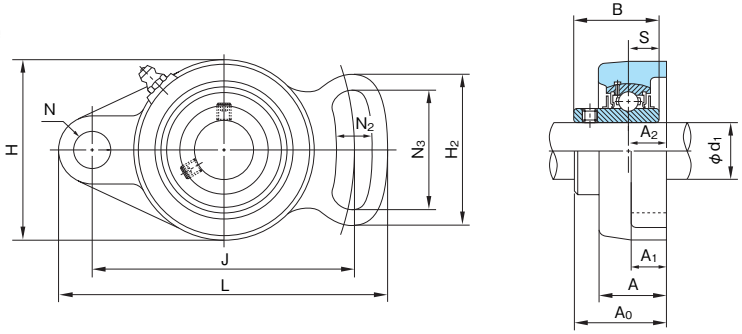


1N=0.102kgf

| Shaft dia. $d_1$ (mm) | Unit No. | Boundary dimensions (mm) | | | | | | | | | | | | | Bolt size | | Bearings | | | Housing No. | Mass of Unit (kg) |
|---|---|---|---|---|---|---|---|---|---|---|---|---|---|---|---|---|---|---|---|---|---|
| | | H | $H_2$ | L | A | J | N | $N_2$ | $N_3$ | $A_1$ | $A_2$ | $A_0$ | B | S | | | No. | Basic load rating (N) Cr | Basic load rating (N) Cor | | |
| 12 | UCFA201 | 60 | 54 | 102 | 25.5 | 78 | 10 | 10 | 40 | 12 | 15 | 33.3 | 31 | 12.7 | M 8 | | UC201 | 12800 | 6600 | FA204 | 0.50 |
| 15 | UCFA202 | 60 | 54 | 102 | 25.5 | 78 | 10 | 10 | 40 | 12 | 15 | 33.3 | 31 | 12.7 | M 8 | | UC202 | 12800 | 6600 | FA204 | 0.49 |
| 17 | UCFA203 | 60 | 54 | 102 | 25.5 | 78 | 10 | 10 | 40 | 12 | 15 | 33.3 | 31 | 12.7 | M 8 | | UC203 | 12800 | 6600 | FA204 | 0.48 |
| 20 | UCFA204 | 60 | 54 | 102 | 25.5 | 78 | 10 | 10 | 40 | 12 | 15 | 33.3 | 31 | 12.7 | M 8 | | UC204 | 12800 | 6600 | FA204 | 0.46 |
| 25 | UCFA205 | 68 | 65 | 125 | 27 | 98 | 12 | 13 | 51 | 14 | 16 | 35.7 | 34 | 14.3 | M10 | | UC205 | 14000 | 7900 | FA205 | 0.66 |
| 30 | UCFA206 | 80 | 72 | 144 | 31 | 117 | 12 | 13 | 58 | 14 | 18 | 40.2 | 38.1 | 15.9 | M10 | | UC206 | 19600 | 11300 | FA206 | 1.0 |
| 35 | UCFA207 | 90 | 82 | 161 | 34 | 130 | 14 | 15 | 66 | 16 | 19 | 44.4 | 42.9 | 17.5 | M12 | | UC207 | 25900 | 15400 | FA207 | 1.4 |
| 40 | UCFA208 | 100 | 87 | 175 | 36 | 144 | 14 | 15 | 71 | 16 | 21 | 51.2 | 49.2 | 19 | M12 | | UC208 | 29300 | 17900 | FA208 | 1.7 |
| 45 | UCFA209 | 108 | 90 | 181 | 38 | 148 | 16 | 17 | 72 | 18 | 22 | 52.2 | 49.2 | 19 | M14 | | UC209 | 33000 | 20500 | FA209 | 2.0 |
| 50 | UCFA210 | 115 | 94 | 190 | 40 | 157 | 16 | 17 | 76 | 18 | 22 | 54.6 | 51.6 | 19 | M14 | | UC210 | 35500 | 23200 | FA210 | 2.4 |
| 55 | UCFA211 | 130 | 104 | 219 | 43 | 184 | 16 | 17 | 86 | 20 | 25 | 58.4 | 55.6 | 22.2 | M14 | | UC211 | 43000 | 29400 | FA211 | 3.4 |

Remark: Grease nipple: 1/4-28UNF

NACHI

# Flange Units

## UCFK type

### With set screws

### Cylindrical bore

Shaft dia.: 12～50mm

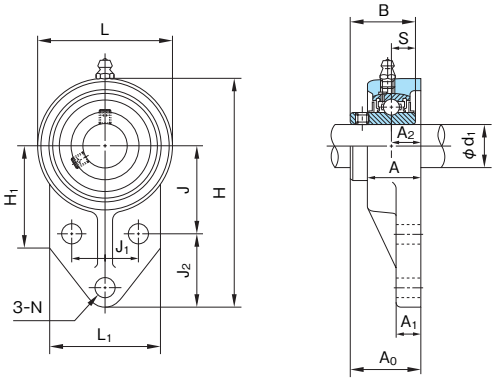


1N=0.102kgf

| Shaft dia. $d_1$ (mm) | Unit No. | Boundary dimensions (mm) | | | | | | | | | | | | | | Bolt size | | Bearings | | | Housing No. | Mass of Unit (kg) |
|---|---|---|---|---|---|---|---|---|---|---|---|---|---|---|---|---|---|---|---|---|---|---|
| | | | | | | | | | | | | | | | | | | No. | Basic load rating (N) | | | |
| | | H | $H_1$ | L | $L_1$ | A | J | $J_1$ | $J_2$ | N | $A_1$ | $A_2$ | $A_0$ | B | S | | | | Cr | Cor | | |
| **12** | **UCFK201** | 110 | 52 | 62 | 52 | 25.5 | 42 | 32 | 27 | 10 | 13 | 15 | 33.3 | 31 | 12.7 | M 8 | | UC201 | 12800 | 6600 | FK204 | 0.60 |
| **15** | **UCFK202** | 110 | 52 | 62 | 52 | 25.5 | 42 | 32 | 27 | 10 | 13 | 15 | 33.3 | 31 | 12.7 | M 8 | | UC202 | 12800 | 6600 | FK204 | 0.58 |
| **17** | **UCFK203** | 110 | 52 | 62 | 52 | 25.5 | 42 | 32 | 27 | 10 | 13 | 15 | 33.3 | 31 | 12.7 | M 8 | | UC203 | 12800 | 6600 | FK204 | 0.57 |
| **20** | **UCFK204** | 110 | 52 | 62 | 52 | 25.5 | 42 | 32 | 27 | 10 | 13 | 15 | 33.3 | 31 | 12.7 | M 8 | | UC204 | 12800 | 6600 | FK204 | 0.55 |
| **25** | **UCFK205** | 116 | 52 | 68 | 56 | 27 | 45 | 34 | 27 | 10 | 13 | 16 | 35.7 | 34 | 14.3 | M 8 | | UC205 | 14000 | 7900 | FK205 | 0.66 |
| **30** | **UCFK206** | 130 | 55 | 78 | 65 | 31 | 50 | 40 | 29 | 10 | 13 | 18 | 40.2 | 38.1 | 15.9 | M 8 | | UC206 | 19600 | 11300 | FK206 | 0.93 |
| **35** | **UCFK207** | 144 | 62 | 90 | 70 | 34 | 55 | 46 | 32 | 10 | 15 | 19 | 44.4 | 42.9 | 17.5 | M 8 | | UC207 | 25900 | 15400 | FK207 | 1.3 |
| **40** | **UCFK208** | 164 | 72 | 100 | 78 | 36 | 60 | 50 | 41 | 12 | 16 | 21 | 51.2 | 49.2 | 19 | M10 | | UC208 | 29300 | 17900 | FK208 | 1.7 |
| **45** | **UCFK209** | 174 | 76 | 106 | 80 | 38 | 65 | 54 | 43 | 12 | 18 | 22 | 52.2 | 49.2 | 19 | M10 | | UC209 | 33000 | 20500 | FK209 | 1.9 |
| **50** | **UCFK210** | 184 | 82 | 112 | 86 | 40 | 68 | 58 | 46 | 12 | 18 | 22 | 54.6 | 51.6 | 19 | M10 | | UC210 | 35500 | 23200 | FK210 | 2.2 |

Remark: Grease nipple: 1/4-28UNF

# Take-up Units

## UCT type With set screws Cylindrical bore

Shaft dia.: 12～60mm

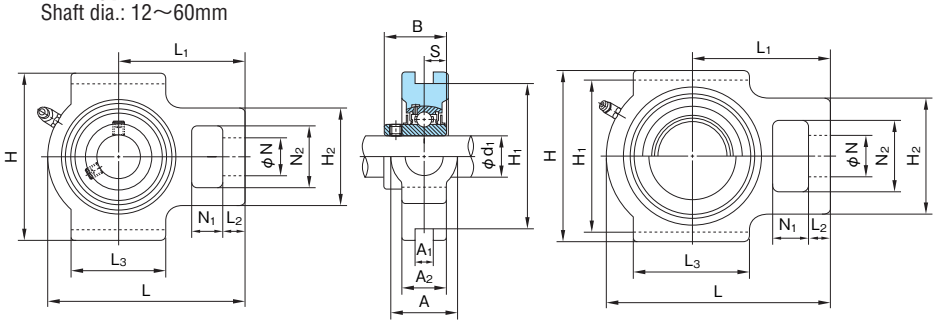


With steel covers

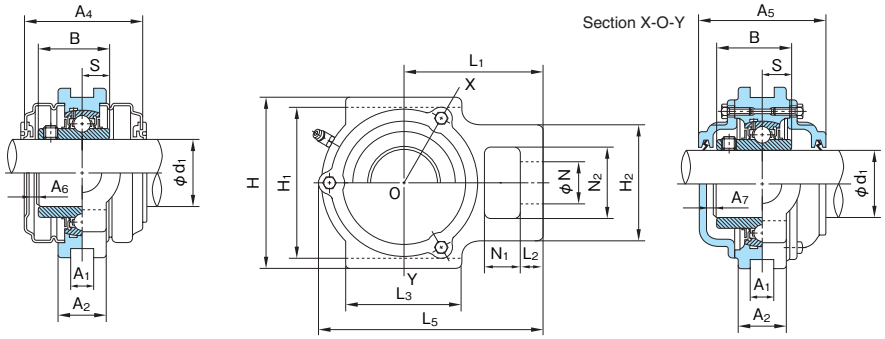


With cast covers

1N=0.102kgf

| Shaft dia. $d_1$ (mm) | Unit No. | Boundary dimensions (mm) | | | | | | | | | | | | | | | | | | | | Bearings | | | Housing No. | Unit No. with steel covers | Unit No. with cast covers | Mass of Unit (kg) | | |
|---|---|---|---|---|---|---|---|---|---|---|---|---|---|---|---|---|---|---|---|---|---|---|---|---|---|---|---|---|---|---|
| | | | | | | | | | | | | | | | | | | | | | | No. | Basic load rating (N) | | | Covers with rubber seal (End cover on one side) | Covers with rubber seal (End cover on one side) | standard | With steel cover | With cast cover |
| | | A | $A_1$ | $A_2$ | H | $H_1$ | $H_2$ | L | $L_5$ | $L_1$ | $L_2$ | $L_3$ | N | $N_1$ | $N_2$ | B | S | $A_4$ | $A_5$ | $A_6$ | $A_7$ | | Cr | Cor | | | | | | |
| 12 | UCT201 | 32 | 12 | 21 | 89 | 76 | 51 | 94 | 96 | 61 | 10 | 51 | 19 | 16 | 32 | 31 | 12.7 | 56 | 62 | 8 | 6 | UC201 | 12800 | 6600 | T204 | UCT201C(E) | CUCT201C(CE) | 0.79 | 0.85 | 1.2 |
| 15 | UCT202 | 32 | 12 | 21 | 89 | 76 | 51 | 94 | 96 | 61 | 10 | 51 | 19 | 16 | 32 | 31 | 12.7 | 56 | 62 | 8 | 6 | UC202 | 12800 | 6600 | T204 | UCT202C(E) | CUCT202C(CE) | 0.77 | 0.83 | 1.2 |
| 17 | UCT203 | 32 | 12 | 21 | 89 | 76 | 51 | 94 | 96 | 61 | 10 | 51 | 19 | 16 | 32 | 31 | 12.7 | 56 | 62 | 8 | 6 | UC203 | 12800 | 6600 | T204 | UCT203C(E) | CUCT203C(CE) | 0.76 | 0.82 | 1.2 |
| 20 | UCT204 | 32 | 12 | 21 | 89 | 76 | 51 | 94 | 96 | 61 | 10 | 51 | 19 | 16 | 32 | 31 | 12.7 | 56 | 62 | 8 | 6 | UC204 | 12800 | 6600 | T204 | UCT204C(E) | CUCT204C(CE) | 0.74 | 0.80 | 1.2 |
| 25 | UCT205 | 32 | 12 | 24 | 89 | 76 | 51 | 97 | 100 | 62 | 10 | 51 | 19 | 16 | 32 | 34 | 14.3 | 63 | 70 | 11 | 9 | UC205 | 14000 | 7900 | T205 | UCT205C(E) | CUCT205C(CE) | 0.82 | 0.89 | 1.5 |
| | UCTX05 | 37 | 12 | 28 | 102 | 89 | 56 | 113 | — | 70 | 10 | 57 | 22 | 16 | 37 | 38.1 | 15.9 | 65 | — | 9 | — | UCX05 | 19600 | 11300 | TX05 | UCTX05C(E) | — | 1.3 | 1.3 | — |
| | UCT305 | 36 | 12 | 26 | 89 | 80 | 62 | 122 | 122 | 76 | 12 | 65 | 26 | 16 | 36 | 38 | 15 | — | 78 | — | 10 | UC305 | 21300 | 10900 | T305 | — | CUCT305C(CE) | 1.4 | — | 2.0 |
| 30 | UCT206 | 37 | 12 | 28 | 102 | 89 | 56 | 113 | 113 | 70 | 10 | 57 | 22 | 16 | 37 | 38.1 | 15.9 | 65 | 74 | 9 | 8 | UC206 | 19600 | 11300 | T206 | UCT206C(E) | CUCT206C(CE) | 1.3 | 1.4 | 2.0 |
| | UCTX06 | 37 | 12 | 30 | 102 | 89 | 64 | 129 | — | 78 | 13 | 64 | 22 | 16 | 37 | 42.9 | 17.5 | 70 | — | 8 | — | UCX06 | 25900 | 15400 | TX06 | UCTX06C(E) | — | 1.6 | 1.6 | — |
| | UCT306 | 41 | 16 | 28 | 100 | 90 | 70 | 137 | 137 | 85 | 14 | 74 | 28 | 18 | 41 | 43 | 17 | — | 84 | — | 10 | UC306 | 26800 | 15000 | T306 | — | CUCT306C(CE) | 1.8 | — | 2.5 |
| 35 | UCT207 | 37 | 12 | 30 | 102 | 89 | 64 | 129 | 129 | 78 | 13 | 64 | 22 | 16 | 37 | 42.9 | 17.5 | 70 | 80 | 8 | 8 | UC207 | 25900 | 15400 | T207 | UCT207C(E) | CUCT207C(CE) | 1.6 | 1.8 | 2.6 |
| | UCTX07 | 49 | 16 | 36 | 114 | 102 | 83 | 144 | — | 88 | 15 | 83 | 29 | 19 | 49 | 49.2 | 19 | 83 | — | 10 | — | UCX07 | 29300 | 17900 | TX07 | UCTX07C(E) | — | 2.6 | 2.6 | — |
| | UCT307 | 45 | 16 | 32 | 111 | 100 | 75 | 150 | 150 | 94 | 15 | 80 | 30 | 20 | 45 | 48 | 19 | — | 90 | — | 10 | UC307 | 33500 | 19200 | T307 | — | CUCT307C(CE) | 2.4 | — | 3.3 |
| 40 | UCT208 | 49 | 16 | 33 | 114 | 102 | 83 | 144 | 144 | 88 | 16 | 83 | 29 | 19 | 49 | 49.2 | 19 | 82 | 90 | 10 | 8 | UC208 | 29300 | 17900 | T208 | UCT208C(E) | CUCT208C(CE) | 2.4 | 2.5 | 3.4 |
| | UCTX08 | 49 | 16 | 36 | 117 | 102 | 83 | 144 | — | 87 | 15 | 83 | 29 | 19 | 49 | 49.2 | 19 | 82 | — | 10 | — | UCX08 | 33000 | 20500 | TX08 | UCTX08C(E) | — | 2.6 | 2.6 | — |
| | UCT308 | 50 | 18 | 34 | 124 | 112 | 83 | 162 | 162 | 100 | 17 | 89 | 32 | 22 | 50 | 52 | 19 | — | 100 | — | 11 | UC308 | 40500 | 23900 | T308 | — | CUCT308C(CE) | 3.0 | — | 4.0 |
| 45 | UCT209 | 49 | 16 | 35 | 117 | 102 | 83 | 144 | 145 | 87 | 16 | 83 | 29 | 19 | 49 | 49.2 | 19 | 82 | 90 | 10 | 8 | UC209 | 33000 | 20500 | T209 | UCT209C(E) | CUCT209C(CE) | 2.4 | 2.6 | 3.6 |
| | UCTX09 | 49 | 16 | 38 | 117 | 102 | 83 | 149 | — | 90 | 16 | 86 | 29 | 19 | 49 | 51.6 | 19 | 87 | — | 9 | — | UCX09 | 35500 | 23200 | TX09 | UCTX09C(E) | — | 2.8 | 3.0 | — |
| | UCT309 | 55 | 18 | 38 | 138 | 125 | 90 | 178 | 178 | 110 | 18 | 97 | 34 | 24 | 55 | 57 | 22 | — | 106 | — | 12 | UC309 | 51500 | 29500 | T309 | — | CUCT309C(CE) | 4.1 | — | 5.5 |
| 50 | UCT210 | 49 | 16 | 37 | 117 | 102 | 83 | 149 | 151 | 90 | 16 | 86 | 29 | 19 | 49 | 51.6 | 19 | 87 | 98 | 9 | 10 | UC210 | 35500 | 23200 | T210 | UCT210C(E) | CUCT210C(CE) | 2.5 | 2.8 | 4.1 |
| | UCTX10 | 64 | 22 | 42 | 146 | 130 | 102 | 171 | — | 106 | 19 | 95 | 35 | 25 | 64 | 55.6 | 22.2 | 88 | — | 9 | — | UCX10 | 43000 | 29400 | TX10 | UCTX10C(E) | — | 4.4 | 4.6 | — |
| | UCT310 | 61 | 20 | 40 | 151 | 140 | 98 | 191 | 191 | 117 | 20 | 106 | 37 | 27 | 61 | 61 | 22 | — | 114 | — | 12 | UC310 | 61500 | 38200 | T310 | — | CUCT310C(CE) | 5.2 | — | 6.8 |
| 55 | UCT211 | 64 | 22 | 38 | 146 | 130 | 102 | 171 | 174 | 106 | 19 | 95 | 35 | 25 | 64 | 55.6 | 22.2 | 88 | 100 | 9 | 10 | UC211 | 43000 | 29400 | T211 | UCT211C(E) | CUCT211C(CE) | 4.0 | 4.3 | 5.6 |
| | UCTX11 | 64 | 22 | 44 | 146 | 130 | 102 | 194 | — | 119 | 19 | 102 | 35 | 32 | 64 | 65.1 | 25.4 | 100 | — | 9 | — | UCX11 | 52500 | 36100 | TX11 | UCTX11C(E) | — | 5.2 | 5.5 | — |
| | UCT311 | 66 | 22 | 44 | 163 | 150 | 105 | 207 | 207 | 127 | 21 | 115 | 39 | 29 | 66 | 66 | 25 | — | 120 | — | 13 | UC311 | 71500 | 44800 | T311 | — | CUCT311C(CE) | 6.4 | — | 8.3 |
| 60 | UCT212 | 64 | 22 | 42 | 146 | 130 | 102 | 194 | 194 | 119 | 19 | 102 | 35 | 32 | 64 | 65.1 | 25.4 | 102 | 114 | 10 | 11 | UC212 | 52500 | 36100 | T212 | UCT212C(E) | CUCT212C(CE) | 5.1 | 5.5 | 7.0 |
| | UCTX12 | 70 | 26 | 48 | 167 | 151 | 111 | 224 | — | 137 | 21 | 121 | 41 | 32 | 70 | 65.1 | 25.4 | 104 | — | 11 | — | UCX12 | 57500 | 40000 | TX12 | UCTX12C(E) | — | 7.2 | 7.4 | — |
| | UCT312 | 71 | 22 | 46 | 178 | 160 | 113 | 220 | 220 | 135 | 23 | 123 | 41 | 31 | 71 | 71 | 26 | — | 130 | — | 14 | UC312 | 81500 | 52000 | T312 | — | CUCT312C(CE) | 7.6 | — | 10.7 |

Remarks: 1. Grease nipple: 1/4-28UNF

Remarks: 2. Examples of unit numbers with covers:

With steel cover { Covers with rubber seal on both sides :UCT210C
An end cover and a cover with rubber seal :UCT210E

With cast cover { Covers with rubber seal on both sides :CUCT210C
An end cover and a cover with rubber seal :CUCT210CE

# Take-up Units

## UCT type With set screws Cylindrical bore

Shaft dia.: 65～140mm

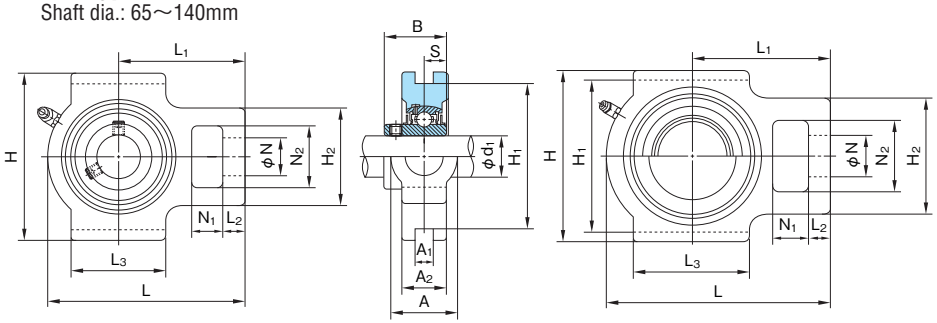


With steel covers

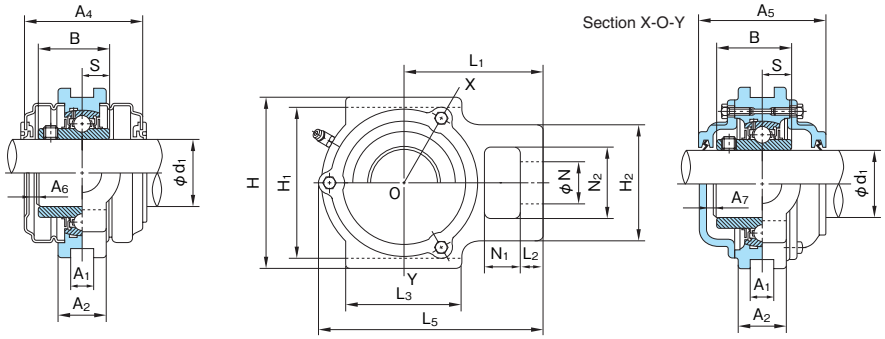


With cast covers

1N=0.102kgf

| Shaft dia. $d_1$ (mm) | Unit No. | Boundary dimensions (mm) | | | | | | | | | | | | | | | | | | | | Bearings | | | Housing No. | Unit No. with steel covers | Unit No. with cast covers | Mass of Unit (kg) | | |
|---|---|---|---|---|---|---|---|---|---|---|---|---|---|---|---|---|---|---|---|---|---|---|---|---|---|---|---|---|---|---|
| | | A | $A_1$ | $A_2$ | H | $H_1$ | $H_2$ | L | $L_5$ | $L_1$ | $L_2$ | $L_3$ | N | $N_1$ | $N_2$ | B | S | $A_4$ | $A_5$ | $A_6$ | $A_7$ | No. | Basic load rating (N) Cr | Basic load rating (N) Cor | | Covers with rubber seal (End cover on one side) | Covers with rubber seal (End cover on one side) | standard | With steel cover | With cast cover |
| 65 | **UCT213** | 70 | 26 | 44 | 167 | 151 | 111 | 224 | 224 | 137 | 21 | 121 | 41 | 32 | 70 | 65.1 | 25.4 | 102 | 118 | 10 | 13 | UC213 | 57500 | 40000 | T213 | **UCT213C(E)** | **CUCT213C(CE)** | 7.0 | 7.5 | 9.2 |
| | **UCTX13** | 70 | 26 | 48 | 167 | 151 | 111 | 224 | — | 137 | 21 | 121 | 41 | 32 | 70 | 74.6 | 30.2 | — | — | — | — | UCX13 | 62000 | 44000 | TX13 | — | — | 7.4 | — | — |
| | **UCT313** | 80 | 26 | 50 | 190 | 170 | 116 | 238 | 242 | 146 | 25 | 134 | 43 | 32 | 70 | 75 | 30 | — | 140 | — | 17 | UC313 | 92500 | 59700 | T313 | — | **CUCT313C(CE)** | 9.2 | — | 12.9 |
| 70 | **UCT214** | 70 | 26 | 46 | 167 | 151 | 111 | 224 | 224 | 137 | 21 | 121 | 41 | 32 | 70 | 74.6 | 30.2 | — | 134 | — | 16 | UC214 | 62000 | 44000 | T214 | — | **CUCT214C(CE)** | 7.1 | — | 9.8 |
| | **UCTX14** | 70 | 26 | 48 | 167 | 151 | 111 | 232 | — | 140 | 21 | 121 | 41 | 32 | 70 | 77.8 | 33.3 | — | — | — | — | UCX14 | 66000 | 48200 | TX14 | — | — | 7.7 | — | — |
| | **UCT314** | 90 | 26 | 52 | 202 | 180 | 130 | 252 | 256 | 155 | 25 | 140 | 46 | 36 | 85 | 78 | 33 | — | 140 | — | 17 | UC314 | 104000 | 68000 | T314 | — | **CUCT314C(CE)** | 11.2 | — | 15.0 |
| 75 | **UCT215** | 70 | 26 | 48 | 167 | 151 | 111 | 232 | 232 | 140 | 21 | 121 | 41 | 32 | 70 | 77.8 | 33.3 | — | 136 | — | 17 | UC215 | 66000 | 48200 | T215 | — | **CUCT215C(CE)** | 7.5 | — | 10.2 |
| | **UCTX15** | 70 | 28 | 48 | 184 | 165 | 111 | 235 | — | 140 | 21 | 121 | 41 | 32 | 70 | 82.6 | 33.3 | — | — | — | — | UCX15 | 72500 | 53000 | TX15 | — | — | 8.4 | — | — |
| | **UCT315** | 90 | 26 | 55 | 216 | 192 | 132 | 262 | 266 | 160 | 25 | 150 | 46 | 36 | 85 | 82 | 32 | — | 150 | — | 17 | UC315 | 114000 | 76900 | T315 | — | **CUCT315C(CE)** | 13.0 | — | 17.2 |
| 80 | **UCT216** | 70 | 26 | 51 | 184 | 165 | 111 | 235 | 236 | 140 | 21 | 121 | 41 | 32 | 70 | 82.6 | 33.3 | — | 146 | — | 15 | UC216 | 72500 | 53000 | T216 | — | **CUCT216C(CE)** | 8.5 | — | 12.4 |
| | **UCTX16** | 73 | 28 | 54 | 198 | 173 | 124 | 260 | — | 162 | 28 | 157 | 48 | 38 | 73 | 85.7 | 34.1 | — | — | — | — | UCX16 | 83500 | 61800 | TX16 | — | — | 11.3 | — | — |
| | **UCT316** | 102 | 30 | 60 | 230 | 204 | 150 | 282 | 285 | 174 | 28 | 160 | 53 | 42 | 98 | 86 | 34 | — | 154 | — | 17 | UC316 | 123000 | 86400 | T316 | — | **CUCT316C(CE)** | 15.6 | — | 20.7 |
| 85 | **UCT217** | 73 | 30 | 54 | 198 | 173 | 124 | 260 | 264 | 162 | 29 | 157 | 48 | 38 | 73 | 85.7 | 34.1 | — | 150 | — | 15 | UC217 | 83500 | 61800 | T217 | — | **CUCT217C(CE)** | 11.2 | — | 15.4 |
| | **UCTX17** | 73 | 28 | 54 | 198 | 173 | 124 | 260 | — | 162 | 28 | 157 | 48 | 38 | 73 | 96 | 39.7 | — | — | — | — | UCX17 | 95500 | 71400 | TX17 | — | — | 11.0 | — | — |
| | **UCT317** | 102 | 32 | 64 | 240 | 214 | 152 | 298 | 302 | 183 | 30 | 170 | 53 | 42 | 98 | 96 | 40 | — | 164 | — | 18 | UC317 | 132000 | 96500 | T317 | — | **CUCT317C(CE)** | 19.3 | — | 24.4 |
| 90 | **UCT318** | 110 | 32 | 66 | 255 | 228 | 160 | 312 | 316 | 192 | 30 | 175 | 57 | 46 | 106 | 96 | 40 | — | 168 | — | 20 | UC318 | 143000 | 107200 | T318 | — | **CUCT318C(CE)** | 21.2 | — | 27.4 |
| 95 | **UCT319** | 110 | 35 | 72 | 270 | 240 | 165 | 322 | 326 | 197 | 31 | 180 | 57 | 46 | 106 | 103 | 41 | — | 180 | — | 20 | UC319 | 153000 | 118400 | T319 | — | **CUCT319C(CE)** | 24.4 | — | 31.3 |
| 100 | **UCT320** | 120 | 35 | 75 | 290 | 260 | 175 | 345 | 349 | 210 | 32 | 200 | 59 | 48 | 115 | 108 | 42 | — | 190 | — | 21 | UC320 | 173000 | 140400 | T320 | — | **CUCT320C(CE)** | 30.6 | — | 37.9 |
| 105 | **UCT321** | 120 | 35 | 75 | 290 | 260 | 175 | 345 | 354 | 210 | 32 | 200 | 59 | 48 | 115 | 112 | 44 | — | 194 | — | 21 | UC321 | 183000 | 153100 | T321 | — | **CUCT321C(CE)** | 30.2 | — | 38.2 |
| 110 | **UCT322** | 130 | 38 | 80 | 320 | 285 | 185 | 385 | 387 | 235 | 38 | 215 | 65 | 52 | 125 | 117 | 46 | — | 210 | — | 26 | UC322 | 205000 | 178800 | T322 | — | **CUCT322C(CE)** | 38.8 | — | 48.2 |
| 120 | **UCT324** | 140 | 45 | 90 | 355 | 320 | 210 | 432 | 432 | 267 | 42 | 230 | 70 | 60 | 140 | 126 | 51 | — | 220 | — | 25 | UC324 | 207000 | 184800 | T324 | — | **CUCT324C(CE)** | 54.6 | — | 67.3 |
| 130 | **UCT326** | 150 | 50 | 100 | 385 | 350 | 220 | 465 | 465 | 285 | 45 | 240 | 75 | 65 | 150 | 135 | 54 | — | 230 | — | 24 | UC326 | 229000 | 214300 | T326 | — | **CUCT326C(CE)** | 68.4 | — | 83.5 |
| 140 | **UCT328** | 155 | 50 | 100 | 415 | 380 | 230 | 515 | 515 | 315 | 50 | 255 | 80 | 70 | 160 | 145 | 59 | — | 240 | — | 24 | UC328 | 255000 | 246000 | T328 | — | **CUCT328C(CE)** | 83.2 | — | 101 |

Remarks: 1. Grease nipple: 1/4-28UNF for bore number 13 and under
PF1/8 for bore number 14 and over

Remarks: 2. Examples of unit numbers with covers:
With steel cover { Covers with rubber seal on both sides :UCT213C
An end cover and a cover with rubber seal :UCT213E
With cast cover { Covers with rubber seal on both sides :CUCT213C
An end cover and a cover with rubber seal :CUCT213CE

# Take-up Units

## UKT+H type With adapter assembly Tapered bore

Shaft dia.: 20～60mm

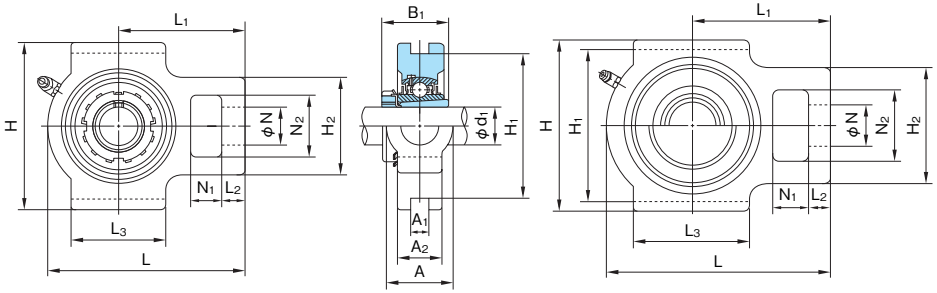


With steel covers

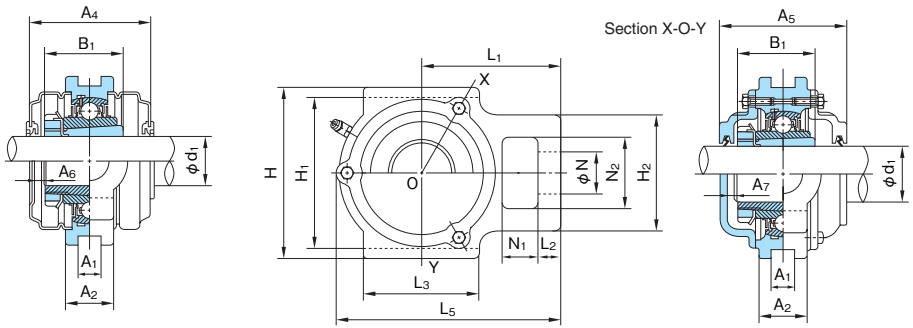


With cast covers

1N=0.102kgf

| Shaft dia. $d_1$ (mm) | Unit No. | Boundary dimensions (mm) | | | | | | | | | | | | | | | | | | | Bearings | | | Housing No. | Unit No. with steel covers | Unit No. with cast covers | Mass of Unit (kg) | | |
|---|---|---|---|---|---|---|---|---|---|---|---|---|---|---|---|---|---|---|---|---|---|---|---|---|---|---|---|---|---|
| | | | | | | | | | | | | | | | | | | | | | No. | Basic load rating (N) | | | Covers with rubber seal (End cover on one side) | Covers with rubber seal (End cover on one side) | standard | With steel cover | With cast cover |
| | | A | $A_1$ | $A_2$ | H | $H_1$ | $H_2$ | L | $L_5$ | $L_1$ | $L_2$ | $L_3$ | N | $N_1$ | $N_2$ | $B_1$ | $A_4$ | $A_5$ | $A_6$ | $A_7$ | | Cr | Cor | | | | | | |
| 20 | **UKT205+H2305** | 32 | 12 | 24 | 89 | 76 | 51 | 97 | 100 | 62 | 10 | 51 | 19 | 16 | 32 | 35 | 63 | 70 | 11 | 9 | UK205+H2305 | 14000 | 7900 | T205 | **UKT205C(E)+H2305** | **CUKT205C(CE)+H2305** | 0.83 | 0.94 | 1.6 |
| | **UKTX05+H2305** | 37 | 12 | 28 | 102 | 89 | 56 | 113 | — | 70 | 10 | 57 | 22 | 16 | 37 | 35 | 65 | — | 10 | — | UKX05+H2305 | 19600 | 11300 | TX05 | **UKTX05C(E)+H2305** | — | 1.3 | 1.3 | — |
| | **UKT305+H2305** | 36 | 12 | 26 | 89 | 80 | 62 | 122 | 122 | 76 | 12 | 65 | 26 | 16 | 36 | 35 | — | 78 | — | 12 | UK305+H2305 | 21300 | 10900 | T305 | — | **CUKT305C(CE)+H2305** | 1.4 | — | 2.1 |
| 25 | **UKT206+H2306** | 37 | 12 | 28 | 102 | 89 | 56 | 113 | 113 | 70 | 10 | 57 | 22 | 16 | 37 | 38 | 65 | 74 | 10 | 10 | UK206+H2306 | 19600 | 11300 | T206 | **UKT206C(E)+H2306** | **CUKT206C(CE)+H2306** | 1.4 | 1.5 | 2.1 |
| | **UKTX06+H2306** | 37 | 12 | 30 | 102 | 89 | 64 | 129 | — | 78 | 13 | 64 | 22 | 16 | 37 | 38 | 70 | — | 12 | — | UKX06+H2306 | 25900 | 15400 | TX06 | **UKTX06C(E)+H2306** | — | 1.7 | 1.7 | — |
| | **UKT306+H2306** | 41 | 16 | 28 | 100 | 90 | 70 | 137 | 137 | 85 | 14 | 74 | 28 | 18 | 41 | 38 | — | 84 | — | 13 | UK306+H2306 | 26800 | 15000 | T306 | — | **CUKT306C(CE)+H2306** | 1.8 | — | 2.6 |
| 30 | **UKT207+H2307** | 37 | 12 | 30 | 102 | 89 | 64 | 129 | 129 | 78 | 13 | 64 | 22 | 16 | 37 | 43 | 70 | 80 | 11 | 11 | UK207+H2307 | 25900 | 15400 | T207 | **UKT207C(E)+H2307** | **CUKT207C(CE)+H2307** | 1.7 | 1.9 | 2.7 |
| | **UKTX07+H2307** | 49 | 16 | 36 | 114 | 102 | 83 | 144 | — | 88 | 15 | 83 | 29 | 19 | 49 | 43 | 83 | — | 17 | — | UKX07+H2307 | 29300 | 17900 | TX07 | **UKTX07C(E)+H2307** | — | 2.6 | 2.6 | — |
| | **UKT307+H2307** | 45 | 16 | 32 | 111 | 100 | 75 | 150 | 150 | 94 | 15 | 80 | 30 | 20 | 45 | 43 | — | 90 | — | 14 | UK307+H2307 | 33500 | 19200 | T307 | — | **CUKT307C(CE)+H2307** | 2.5 | — | 3.4 |
| 35 | **UKT208+H2308** | 49 | 16 | 33 | 114 | 102 | 83 | 144 | 144 | 88 | 16 | 83 | 29 | 19 | 49 | 46 | 82 | 90 | 15 | 14 | UK208+H2308 | 29300 | 17900 | T208 | **UKT208C(E)+H2308** | **CUKT208C(CE)+H2308** | 2.5 | 2.6 | 3.5 |
| | **UKTX08+H2308** | 49 | 16 | 36 | 117 | 102 | 83 | 144 | — | 87 | 15 | 83 | 29 | 19 | 49 | 46 | 82 | — | 15 | — | UKX08+H2308 | 33000 | 20500 | TX08 | **UKTX08C(E)+H2308** | — | 2.6 | 2.6 | — |
| | **UKT308+H2308** | 50 | 18 | 34 | 124 | 112 | 83 | 162 | 162 | 100 | 17 | 89 | 32 | 22 | 50 | 46 | — | 100 | — | 17 | UK308+H2308 | 40500 | 23900 | T308 | — | **CUKT308C(CE)+H2308** | 3.1 | — | 4.1 |
| 40 | **UKT209+H2309** | 49 | 16 | 35 | 117 | 102 | 83 | 144 | 145 | 87 | 16 | 83 | 29 | 19 | 49 | 50 | 82 | 90 | 14 | 13 | UK209+H2309 | 33000 | 20500 | T209 | **UKT209C(E)+H2309** | **CUKT209C(CE)+H2309** | 2.5 | 2.7 | 3.8 |
| | **UKTX09+H2309** | 49 | 16 | 38 | 117 | 102 | 83 | 149 | — | 90 | 16 | 86 | 29 | 19 | 49 | 50 | 87 | — | 16 | — | UKX09+H2309 | 35500 | 23200 | TX09 | **UKTX09C(E)+H2309** | — | 2.8 | 3.0 | — |
| | **UKT309+H2309** | 55 | 18 | 38 | 138 | 125 | 90 | 178 | 178 | 110 | 18 | 97 | 34 | 24 | 55 | 50 | — | 106 | — | 17 | UK309+H2309 | 51500 | 29500 | T309 | — | **CUKT309C(CE)+H2309** | 4.1 | — | 5.6 |
| 45 | **UKT210+H2310** | 49 | 16 | 37 | 117 | 102 | 83 | 149 | 151 | 90 | 16 | 86 | 29 | 19 | 49 | 55 | 87 | 98 | 15 | 15 | UK210+H2310 | 35500 | 23200 | T210 | **UKT210C(E)+H2310** | **CUKT210C(CE)+H2310** | 2.7 | 3.0 | 4.3 |
| | **UKTX10+H2310** | 64 | 22 | 42 | 146 | 130 | 102 | 171 | — | 106 | 19 | 95 | 35 | 25 | 64 | 55 | 88 | — | 14 | — | UKX10+H2310 | 43000 | 29400 | TX10 | **UKTX10C(E)+H2310** | — | 4.4 | 4.6 | — |
| | **UKT310+H2310** | 61 | 20 | 40 | 151 | 140 | 98 | 191 | 191 | 117 | 20 | 106 | 37 | 27 | 61 | 55 | — | 114 | — | 19 | UK310+H2310 | 61500 | 38200 | T310 | — | **CUKT310C(CE)+H2310** | 5.3 | — | 7.1 |
| 50 | **UKT211+H2311** | 64 | 22 | 38 | 146 | 130 | 102 | 171 | 174 | 106 | 19 | 95 | 35 | 25 | 64 | 59 | 88 | 100 | 14 | 15 | UK211+H2311 | 43000 | 29400 | T211 | **UKT211C(E)+H2311** | **CUKT211C(CE)+H2311** | 4.1 | 4.5 | 5.8 |
| | **UKTX11+H2311** | 64 | 22 | 44 | 146 | 130 | 102 | 194 | — | 119 | 19 | 102 | 35 | 32 | 64 | 59 | 100 | — | 19 | — | UKX11+H2311 | 52500 | 36100 | TX11 | **UKTX11C(E)+H2311** | — | 5.1 | 5.3 | — |
| | **UKT311+H2311** | 66 | 22 | 44 | 163 | 150 | 105 | 207 | 207 | 127 | 21 | 115 | 39 | 29 | 66 | 59 | — | 120 | — | 20 | UK311+H2311 | 71500 | 44800 | T311 | — | **CUKT311C(CE)+H2311** | 6.4 | — | 8.4 |
| 55 | **UKT212+H2312** | 64 | 22 | 42 | 146 | 130 | 102 | 194 | 194 | 119 | 19 | 102 | 35 | 32 | 64 | 62 | 102 | 114 | 19 | 20 | UK212+H2312 | 52500 | 36100 | T212 | **UKT212C(E)+H2312** | **CUKT212C(CE)+H2312** | 5.1 | 5.6 | 7.2 |
| | **UKTX12+H2312** | 70 | 26 | 48 | 167 | 151 | 111 | 224 | — | 137 | 21 | 121 | 41 | 32 | 70 | 62 | 104 | — | 19 | — | UKX12+H2312 | 57500 | 40000 | TX12 | **UKTX12C(E)+H2312** | — | 7.1 | 7.3 | — |
| | **UKT312+H2312** | 71 | 22 | 46 | 178 | 160 | 113 | 220 | 220 | 135 | 23 | 123 | 41 | 31 | 71 | 62 | — | 130 | — | 23 | UK312+H2312 | 81500 | 52000 | T312 | — | **CUKT312C(CE)+H2312** | 7.6 | — | 10.8 |
| 60 | **UKT213+H2313** | 70 | 26 | 44 | 167 | 151 | 111 | 224 | 224 | 137 | 21 | 121 | 41 | 32 | 70 | 65 | 102 | 118 | 17 | 20 | UK213+H2313 | 57500 | 40000 | T213 | **UKT213C(E)+H2313** | **CUKT213C(CE)+H2313** | 7.1 | 7.6 | 9.5 |
| | **UKTX13+H2313** | 70 | 26 | 48 | 167 | 151 | 111 | 224 | — | 137 | 21 | 121 | 41 | 32 | 70 | 65 | — | — | — | — | UKX13+H2313 | 62000 | 44000 | TX13 | — | — | 7.2 | — | — |
| | **UKT313+H2313** | 80 | 26 | 50 | 190 | 170 | 116 | 238 | 242 | 146 | 25 | 134 | 43 | 32 | 70 | 65 | — | 140 | — | 24 | UK313+H2313 | 92500 | 59700 | T313 | — | **CUKT313C(CE)+H2313** | 9.1 | — | 12.9 |

Remarks: 1. Grease nipple: 1/4-28UNF

Remarks: 2. Examples of unit numbers with covers:

With steel cover { Covers with rubber seal on both sides :UKP210C+H2310
An end cover and a cover with rubber seal :UKT210E+H2310

With cast cover { Covers with rubber seal on both sides :UKP210C+H2310
An end cover and a cover with rubber seal :CUKT210CE+H2310

# Take-up Units

## UKT+H type With adapter assembly Tapered bore

Shaft dia.: 65～125mm

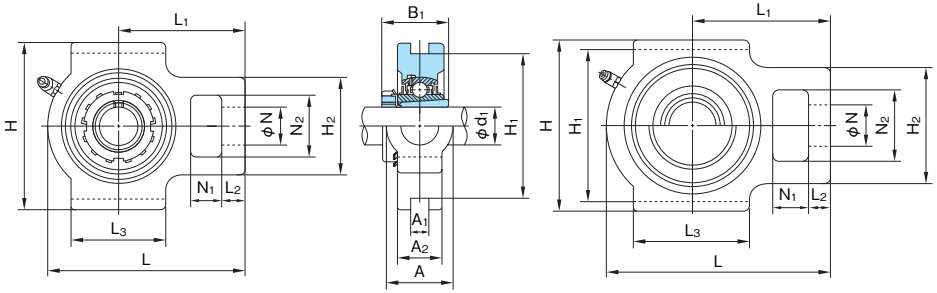


With steel covers

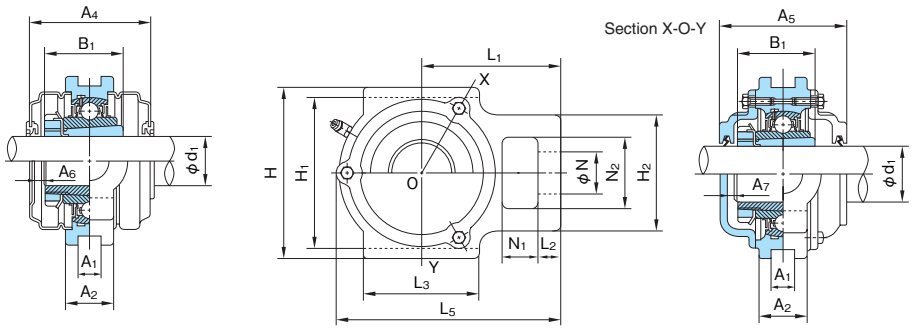


With cast covers

1N=0.102kgf

| Shaft dia. $d_1$ (mm) | Unit No. | Boundary dimensions (mm) | | | | | | | | | | | | | | | | | | | Bearings | | | Housing No. | Unit No. with steel covers | Unit No. with cast covers | Mass of Unit (kg) | | |
|---|---|---|---|---|---|---|---|---|---|---|---|---|---|---|---|---|---|---|---|---|---|---|---|---|---|---|---|---|---|
| | | A | $A_1$ | $A_2$ | H | $H_1$ | $H_2$ | L | $L_5$ | $L_1$ | $L_2$ | $L_3$ | N | $N_1$ | $N_2$ | $B_1$ | $A_4$ | $A_5$ | $A_6$ | $A_7$ | No. | Basic load rating (N) Cr | Basic load rating (N) Cor | | Covers with rubber seal (End cover on one side) | Covers with rubber seal (End cover on one side) | standard | With steel cover | With cast cover |
| 65 | **UKT215+H2315** | 70 | 26 | 48 | 167 | 151 | 111 | 232 | 232 | 140 | 21 | 121 | 41 | 32 | 70 | 73 | — | 136 | — | 26 | UK215+H2315 | 66000 | 48200 | T215 | — | **CUKT215C(CE)+H2315** | 7.9 | — | 10.7 |
| | **UKTX15+H2315** | 70 | 28 | 48 | 184 | 165 | 111 | 235 | — | 140 | 21 | 121 | 41 | 32 | 70 | 73 | — | — | — | — | UKX15+H2315 | 72500 | 53000 | TX15 | — | — | 8.4 | — | — |
| | **UKT315+H2315** | 90 | 26 | 55 | 216 | 192 | 132 | 262 | 266 | 160 | 25 | 150 | 46 | 36 | 85 | 73 | — | 150 | — | 25 | UK315+H2315 | 114000 | 76900 | T315 | — | **CUKT315C(CE)+H2315** | 13.1 | — | 17.6 |
| 70 | **UKT216+H2316** | 70 | 26 | 51 | 184 | 165 | 111 | 235 | 236 | 140 | 21 | 121 | 41 | 32 | 70 | 78 | — | 146 | — | 26 | UK216+H2316 | 72500 | 53000 | T216 | — | **CUKT216C(CE)+H2316** | 8.9 | — | 12.9 |
| | **UKTX16+H2316** | 73 | 28 | 54 | 198 | 173 | 124 | 260 | — | 162 | 28 | 157 | 48 | 38 | 73 | 78 | — | — | — | — | UKX16+H2316 | 83500 | 61800 | TX16 | — | — | 11.4 | — | — |
| | **UKT316+H2316** | 102 | 30 | 60 | 230 | 204 | 150 | 282 | 285 | 174 | 28 | 160 | 53 | 42 | 98 | 78 | — | 154 | — | 23 | UK316+H2316 | 123000 | 86400 | T316 | — | **CUKT316C(CE)+H2316** | 15.9 | — | 21.1 |
| 75 | **UKT217+H2317** | 73 | 30 | 54 | 198 | 173 | 124 | 260 | 264 | 162 | 29 | 157 | 48 | 38 | 73 | 82 | — | 150 | — | 26 | UK217+H2317 | 83500 | 61800 | T217 | — | **CUKT217C(CE)+H2317** | 11.7 | — | 16.1 |
| | **UKTX17+H2317** | 73 | 28 | 54 | 198 | 173 | 124 | 260 | — | 162 | 28 | 157 | 48 | 38 | 73 | 82 | — | — | — | — | UKX17+H2317 | 95500 | 71400 | TX17 | — | — | 10.9 | — | — |
| | **UKT317+H2317** | 102 | 32 | 64 | 240 | 214 | 152 | 298 | 302 | 183 | 30 | 170 | 53 | 42 | 98 | 82 | — | 164 | — | 26 | UK317+H2317 | 132000 | 96500 | T317 | — | **CUKT317C(CE)+H2317** | 19.3 | — | 24.6 |
| 80 | **UKT318+H2318** | 110 | 32 | 66 | 255 | 228 | 160 | 312 | 316 | 192 | 30 | 175 | 57 | 46 | 106 | 86 | — | 168 | — | 26 | UK318+H2318 | 143000 | 107200 | T318 | — | **CUKT318C(CE)+H2318** | 21.4 | — | 28.4 |
| 85 | **UKT319+H2319** | 110 | 35 | 72 | 270 | 240 | 165 | 322 | 326 | 197 | 31 | 180 | 57 | 46 | 106 | 90 | — | 180 | — | 30 | UK319+H2319 | 153000 | 118400 | T319 | — | **CUKT319C(CE)+H2319** | 24.4 | — | 31.5 |
| 90 | **UKT320+H2320** | 120 | 35 | 75 | 290 | 260 | 175 | 345 | 349 | 210 | 32 | 200 | 59 | 48 | 115 | 97 | — | 190 | — | 31 | UK320+H2320 | 173000 | 140400 | T320 | — | **CUKT320C(CE)+H2320** | 30.6 | — | 38.5 |
| 100 | **UKT322+H2322** | 130 | 38 | 80 | 320 | 285 | 185 | 385 | 387 | 235 | 38 | 215 | 65 | 52 | 125 | 105 | — | 210 | — | 36 | UK322+H2322 | 205000 | 178800 | T322 | — | **CUKT322C(CE)+H2322** | 38.9 | — | 48.9 |
| 110 | **UKT324+H2324** | 140 | 45 | 90 | 355 | 320 | 210 | 432 | 432 | 267 | 42 | 230 | 70 | 60 | 140 | 112 | — | 220 | — | 35 | UK324+H2324 | 207000 | 184800 | T324 | — | **CUKT324C(CE)+H2324** | 54.1 | — | 67.5 |
| 115 | **UKT326+H2326** | 150 | 50 | 100 | 385 | 350 | 220 | 465 | 465 | 285 | 45 | 240 | 75 | 65 | 150 | 121 | — | 230 | — | 36 | UK326+H2326 | 229000 | 214300 | T326 | — | **CUKT326C(CE)+H2326** | 68.7 | — | 85.0 |
| 125 | **UKT328+H2328** | 155 | 50 | 100 | 415 | 380 | 230 | 515 | 515 | 315 | 50 | 255 | 80 | 70 | 160 | 131 | — | 240 | — | 37 | UK328+H2328 | 255000 | 246000 | T328 | — | **CUKT328C(CE)+H2328** | 83.5 | — | 103 |

Remarks: 1. Grease nipple: PF1/8

Remarks: 2. Examples of unit numbers with covers:
With cast cover { Covers with rubber seal on both sides :CUKT315C+H2315
An end cover and a cover with rubber seal :CUKT315CE+H2315

# Take-up Units

## BT200 type

### With set screws

### Cylindrical bore

Shaft dia.: 20～35mm

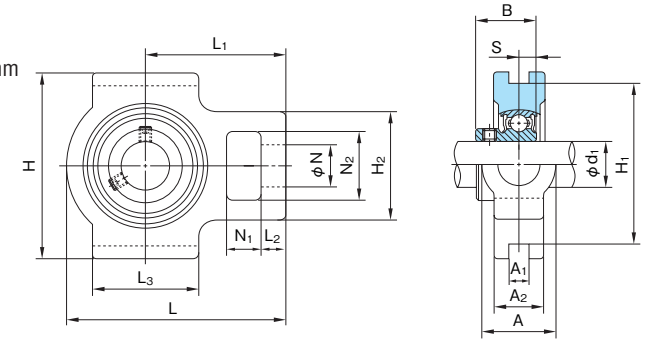


1N=0.102kgf

| Shaft dia. $d_1$ (mm) | Unit No. | Boundary dimensions (mm) | | | | | | | | | | | | | | | | Bearings | | | Housing No. | Mass of Unit (kg) |
|---|---|---|---|---|---|---|---|---|---|---|---|---|---|---|---|---|---|---|---|---|---|---|
| | | A | $A_1$ | $A_2$ | H | $H_1$ | $H_2$ | L | $L_1$ | $L_2$ | $L_3$ | N | $N_1$ | $N_2$ | B | S | | No. | Basic load rating (N) Cr | Basic load rating (N) Cor | | |
| 20 | BT204 | 32 | 12 | 21 | 89 | 76 | 51 | 94 | 61 | 10 | 51 | 19 | 16 | 32 | 24.7 | 7 | | B4 | 12800 | 6600 | T204 G00 | 0.70 |
| 25 | BT205 | 32 | 12 | 24 | 89 | 76 | 51 | 97 | 62 | 10 | 51 | 19 | 16 | 32 | 27 | 7.5 | | B5 | 14000 | 7900 | T205 G00 | 0.79 |
| 30 | BT206 | 37 | 12 | 28 | 102 | 89 | 56 | 113 | 70 | 10 | 57 | 22 | 16 | 37 | 30.3 | 8 | | B6 | 19600 | 11300 | T206 G00 | 1.2 |
| 35 | BT207 | 37 | 12 | 30 | 102 | 89 | 64 | 129 | 78 | 13 | 64 | 22 | 16 | 37 | 32.9 | 8.5 | | B7 | 25900 | 15400 | T207 G00 | 1.6 |

NACHI

# Take-up Units

## UCT200+WB type

**With pressed steel frame**
**With set screws**
**Cylindrical bore**
Shaft dia.: 12～65mm

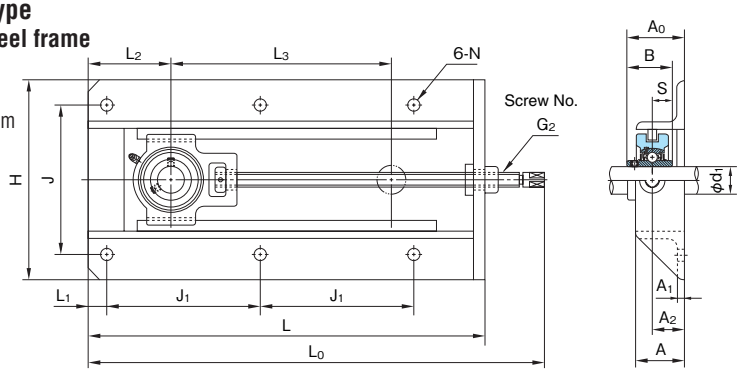


1N=0.102kgf

| Shaft dia. $d_1$ (mm) | Unit No. | Boundary dimensions (mm) | | | | | | | | | | | | | | | | Bolt size | | Frame No. | Bearings | | | Mass of Unit (kg) |
|---|---|---|---|---|---|---|---|---|---|---|---|---|---|---|---|---|---|---|---|---|---|---|---|---|
| | | H | L | J | $J_1$ | N | $L_1$ | $L_2$ | $L_3$ | $G_2$ | $L_0$ | A | $A_1$ | $A_2$ | $A_0$ | B | S | | | | No. | Basic load rating (N) Cr | Basic load rating (N) Cor | |
| 12 | UCT201+WB | 199 | 317 | 154 | 117 | 12 | 19 | 83 | 150 | Tr16 | 367 | 50 | 29 | 6 | 47.3 | 31 | 12.7 | M10 | | WB205 | UC201 | 12800 | 6600 | 5.0 |
| 15 | UCT202+WB | 199 | 317 | 154 | 117 | 12 | 19 | 83 | 150 | Tr16 | 367 | 50 | 29 | 6 | 47.3 | 31 | 12.7 | M10 | | WB205 | UC202 | 12800 | 6600 | 5.0 |
| 17 | UCT203+WB | 199 | 317 | 154 | 117 | 12 | 19 | 83 | 150 | Tr16 | 367 | 50 | 29 | 6 | 47.3 | 31 | 12.7 | M10 | | WB205 | UC203 | 12800 | 6600 | 5.0 |
| 20 | UCT204+WB | 199 | 317 | 154 | 117 | 12 | 19 | 83 | 150 | Tr16 | 367 | 50 | 29 | 6 | 47.3 | 31 | 12.7 | M10 | | WB205 | UC204 | 12800 | 6600 | 5.0 |
| 25 | UCT205+WB | 199 | 317 | 154 | 117 | 12 | 19 | 83 | 150 | Tr16 | 368 | 50 | 29 | 6 | 48.7 | 34 | 14.3 | M10 | | WB205 | UC205 | 14000 | 7900 | 5.0 |
| 30 | UCT206+WB | 212 | 337 | 166 | 127 | 12 | 19 | 95 | 150 | Tr18 | 396 | 50 | 30 | 6 | 52.2 | 38.1 | 15.9 | M10 | | WB206 | UC206 | 19600 | 11300 | 5.9 |
| 35 | UCT207+WB | 212 | 429 | 166 | 173 | 12 | 19 | 99 | 230 | Tr18 | 490 | 50 | 30 | 6 | 55.4 | 42.9 | 17.5 | M10 | | WB207 | UC207 | 25900 | 15400 | 7.9 |
| 40 | UCT208+WB | 233 | 520 | 192 | 219 | 15 | 22 | 108 | 300 | Tr26 | 591 | 50 | 30 | 6 | 60.2 | 49.2 | 19 | M12 | | WB210 | UC208 | 29300 | 17900 | 11.1 |
| 45 | UCT209+WB | 233 | 520 | 192 | 219 | 15 | 22 | 108 | 300 | Tr26 | 590 | 50 | 30 | 6 | 60.2 | 49.2 | 19 | M12 | | WB210 | UC209 | 33000 | 20500 | 11.1 |
| 50 | UCT210+WB | 233 | 520 | 192 | 219 | 15 | 22 | 108 | 300 | Tr26 | 593 | 50 | 30 | 6 | 62.6 | 51.6 | 19 | M12 | | WB210 | UC210 | 35500 | 23200 | 11.2 |
| 55 | UCT211+WB | 301 | 542 | 240 | 230 | 15 | 22 | 114 | 300 | Tr30 | 631 | 65 | 38 | 6 | 71.4 | 55.6 | 22.2 | M12 | | WB211 | UC211 | 43000 | 29400 | 17.3 |
| 60 | UCT212+WB | 301 | 568 | 240 | 243 | 15 | 22 | 127 | 300 | Tr30 | 657 | 65 | 38 | 6 | 77.7 | 65.1 | 25.4 | M12 | | WB212 | UC212 | 52500 | 36100 | 18.7 |
| 65 | UCT213+WB | 322 | 606 | 260 | 260 | 15 | 22 | 144 | 300 | Tr36 | 699 | 65 | 38 | 6 | 77.7 | 65.1 | 25.4 | M12 | | WB213 | UC213 | 57500 | 40000 | 23.4 |

Remark: Grease nipple: 1/4-28UNF

# Take-up Units

## UCTL200+WL type With frame With set screws Cylindrical bore

Shaft dia.: 20～45mm

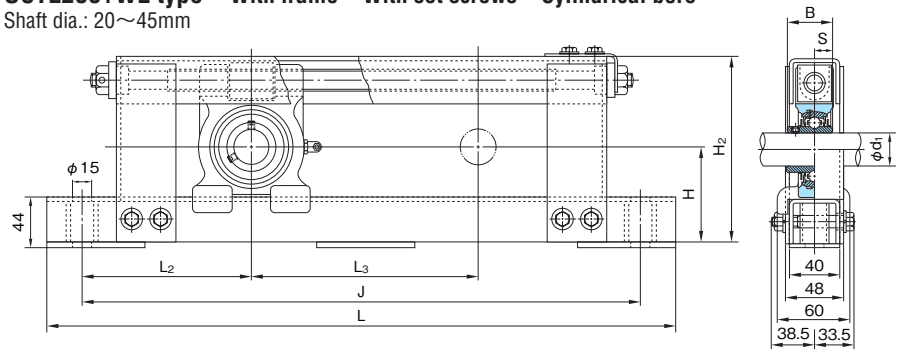


1N=0.102kgf

| Shaft dia. $d_1$ (mm) | Unit No. | Boundary dimensions (mm) | | | | | | | | Bolt size | | Bearings | | | Housing No. | Frame No. | Mass of Unit (kg) |
|---|---|---|---|---|---|---|---|---|---|---|---|---|---|---|---|---|---|
| | | H | $H_2$ | L | J | $L_2$ | $L_3$ | B | S | | | No. | Basic load rating (N) Cr | Basic load rating (N) Cor | | | |
| 20 | *UCTL204+WL100* | 77 | 146 | 430 | 370 | 135 | 100 | 31 | 12.7 | M12 | | UC204 | 12800 | 6600 | TL204 | *WL204-100* | 5.6 |
| | UCTL204+WL200 | | | 530 | 470 | | 200 | | | | | | | | | WL204-200 | 6.3 |
| | *UCTL204+WL300* | | | 630 | 570 | | 300 | | | | | | | | | *WL204-300* | 7.0 |
| | *UCTL204+WL400* | | | 730 | 670 | | 400 | | | | | | | | | *WL204-400* | 7.7 |
| 25 | *UCTL205+WL100* | 82 | 156 | 440 | 380 | 140 | 100 | 34 | 14.3 | M12 | | UC205 | 14000 | 7900 | TL205 | *WL205-100* | 6.0 |
| | UCTL205+WL200 | | | 540 | 480 | | 200 | | | | | | | | | WL205-200 | 6.7 |
| | UCTL205+WL300 | | | 640 | 580 | | 300 | | | | | | | | | WL205-300 | 7.4 |
| | *UCTL205+WL400* | | | 740 | 680 | | 400 | | | | | | | | | *WL205-400* | 8.1 |
| 30 | *UCTL206+WL100* | 87 | 166 | 450 | 390 | 145 | 100 | 38.1 | 15.9 | M12 | | UC206 | 19600 | 11300 | TL206 | *WL206-100* | 6.5 |
| | UCTL206+WL200 | | | 550 | 490 | | 200 | | | | | | | | | WL206-200 | 7.2 |
| | UCTL206+WL300 | | | 650 | 590 | | 300 | | | | | | | | | WL206-300 | 7.9 |
| | *UCTL206+WL400* | | | 750 | 690 | | 400 | | | | | | | | | *WL206-400* | 8.6 |
| 35 | *UCTL207+WL100* | 92 | 176 | 460 | 400 | 150 | 100 | 42.9 | 17.5 | M12 | | UC207 | 25900 | 15400 | TL207 | *WL207-100* | 7.1 |
| | UCTL207+WL200 | | | 560 | 500 | | 200 | | | | | | | | | WL207-200 | 7.8 |
| | UCTL207+WL300 | | | 660 | 600 | | 300 | | | | | | | | | WL207-300 | 8.5 |
| | *UCTL207+WL400* | | | 760 | 700 | | 400 | | | | | | | | | *WL207-400* | 9.2 |
| 40 | *UCTL208+WL100* | 97 | 186 | 470 | 410 | 155 | 100 | 49.2 | 19 | M12 | | UC208 | 29300 | 17900 | TL208 | *WL208-100* | 7.8 |
| | UCTL208+WL200 | | | 570 | 510 | | 200 | | | | | | | | | WL208-200 | 8.5 |
| | UCTL208+WL300 | | | 670 | 610 | | 300 | | | | | | | | | WL208-300 | 9.2 |
| | *UCTL208+WL400* | | | 770 | 710 | | 400 | | | | | | | | | *WL208-400* | 9.9 |
| 45 | *UCTL209+WL100* | 100 | 192 | 480 | 420 | 160 | 100 | 49.2 | 19 | M12 | | UC209 | 33000 | 20500 | TL209 | *WL209-100* | 8.2 |
| | UCTL209+WL200 | | | 580 | 520 | | 200 | | | | | | | | | WL209-200 | 8.9 |
| | UCTL209+WL300 | | | 680 | 620 | | 300 | | | | | | | | | WL209-300 | 9.6 |
| | *UCTL209+WL400* | | | 780 | 720 | | 400 | | | | | | | | | *WL209-400* | 10.3 |

Remarks: 1. Please contact NACHI for *unit numbers appearing* in italic.
2. Grease nipple: PF1/8

# Take-up Units

## UCTU200+WU type

**With frame**
**With set screws**
**Cylindrical bore**
Shaft dia.:
40～60mm

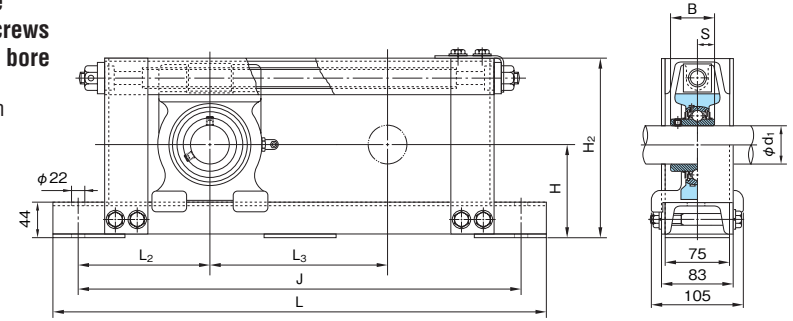


1N=0.102kgf

| Shaft dia. $d_1$ (mm) | Unit No. | Boundary dimensions (mm) | | | | | | | | Bolt size | | Bearings | | | Housing No. | Frame No. | Mass of Unit (kg) |
|---|---|---|---|---|---|---|---|---|---|---|---|---|---|---|---|---|---|
| | | H | $H_2$ | L | J | $L_2$ | $L_3$ | B | S | | | No. | Basic load rating (N) Cr | Basic load rating (N) Cor | | | |
| 40 | **UCTU208+WU500** | 97 | 190 | 870 | 810 | 155 | 500 | 49.2 | 19 | M18 | | UC208 | 29300 | 17900 | TC208 | **WU208-500** | 19.0 |
| | ***UCTU208+WU600*** | | | 970 | 910 | | 600 | | | | | | | | | ***WU208-600*** | 20.6 |
| | ***UCTU208+WU700*** | | | 1070 | 1010 | | 700 | | | | | | | | | ***WU208-700*** | 22.2 |
| | ***UCTU208+WU800*** | | | 1170 | 1110 | | 800 | | | | | | | | | ***WU208-800*** | 23.8 |
| | ***UCTU208+WU900*** | | | 1270 | 1210 | | 900 | | | | | | | | | ***WU208-900*** | 25.3 |
| 45 | **UCTU209+WU500** | 102 | 200 | 880 | 820 | 160 | 500 | 19.2 | 19 | M18 | | UC209 | 33000 | 20500 | TC209 | **WU209-500** | 19.7 |
| | ***UCTU209+WU600*** | | | 980 | 920 | | 600 | | | | | | | | | ***WU209-600*** | 21.3 |
| | ***UCTU209+WU700*** | | | 1080 | 1020 | | 700 | | | | | | | | | ***WU209-700*** | 22.9 |
| | ***UCTU209+WU800*** | | | 1180 | 1120 | | 800 | | | | | | | | | ***WU209-800*** | 24.5 |
| | ***UCTU209+WU900*** | | | 1280 | 1220 | | 900 | | | | | | | | | ***WU209-900*** | 26.1 |
| 50 | **UCTU210+WU500** | 107 | 210 | 890 | 830 | 165 | 500 | 51.6 | 19 | M18 | | UC210 | 35500 | 23200 | TC210 | **WU210-500** | 20.5 |
| | ***UCTU210+WU600*** | | | 990 | 930 | | 600 | | | | | | | | | ***WU210-600*** | 22.2 |
| | ***UCTU210+WU700*** | | | 1090 | 1030 | | 700 | | | | | | | | | ***WU210-700*** | 23.8 |
| | ***UCTU210+WU800*** | | | 1190 | 1130 | | 800 | | | | | | | | | ***WU210-800*** | 25.4 |
| | ***UCTU210+WU900*** | | | 1290 | 1230 | | 900 | | | | | | | | | ***WU210-900*** | 27.0 |
| 55 | **UCTU211+WU500** | 115 | 230 | 910 | 850 | 175 | 500 | 55.6 | 22.2 | M18 | | UC211 | 43000 | 29400 | TC211 | **WU211-500** | 22.4 |
| | ***UCTU211+WU600*** | | | 1010 | 950 | | 600 | | | | | | | | | ***WU211-600*** | 23.7 |
| | ***UCTU211+WU700*** | | | 1110 | 1050 | | 700 | | | | | | | | | ***WU211-700*** | 25.8 |
| | ***UCTU211+WU800*** | | | 1210 | 1150 | | 800 | | | | | | | | | ***WU211-800*** | 27.4 |
| | ***UCTU211+WU900*** | | | 1310 | 1250 | | 900 | | | | | | | | | ***WU211-900*** | 29.1 |
| 60 | **UCTU212+WU500** | 120 | 240 | 920 | 860 | 180 | 500 | 65.1 | 25.4 | M18 | | UC212 | 52500 | 36100 | TC212 | **WU212-500** | 23.9 |
| | ***UCTU212+WU600*** | | | 1020 | 960 | | 600 | | | | | | | | | ***WU212-600*** | 25.6 |
| | ***UCTU212+WU700*** | | | 1120 | 1060 | | 700 | | | | | | | | | ***WU212-700*** | 27.2 |
| | ***UCTU212+WU800*** | | | 1220 | 1160 | | 800 | | | | | | | | | ***WU212-800*** | 28.9 |
| | ***UCTU212+WU900*** | | | 1320 | 1260 | | 900 | | | | | | | | | ***WU212-900*** | 30.6 |

Remarks: 1. Please contact NACHI for *unit numbers appearing* in italic.
2. Grease nipple: PF1/8

# Take-up Units

## UCTU300+WU type

**With frame**
**With set screws**
**Cylindrical bore**
Shaft dia.:
65～90mm

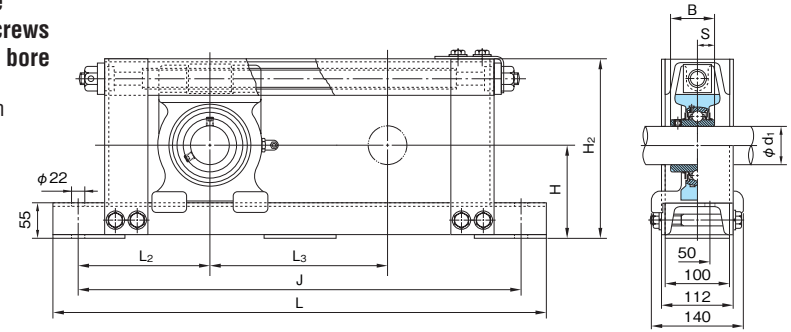


1N=0.102kgf

| Shaft dia. $d_1$ (mm) | Unit No. | Boundary dimensions (mm) | | | | | | | | Bolt size | | Bearings | | | Housing No. | Frame No. | Mass of Unit (kg) |
|---|---|---|---|---|---|---|---|---|---|---|---|---|---|---|---|---|---|
| | | H | $H_2$ | L | J | $L_2$ | $L_3$ | B | S | | | No. | Basic load rating (N) Cr | Basic load rating (N) Cor | | | |
| 65 | UCTU313+WU500 | 145 | 285 | 940 | 880 | 190 | 500 | 75 | 30 | M18 | | UC313 | 92500 | 59700 | TU313 | WU313-500 | 38.3 |
| | *UCTU313+WU600* | | | 1040 | 980 | | 600 | | | | | | | | | *WU313-600* | 40.6 |
| | *UCTU313+WU700* | | | 1140 | 1080 | | 700 | | | | | | | | | *WU313-700* | 42.9 |
| | *UCTU313+WU800* | | | 1240 | 1180 | | 800 | | | | | | | | | *WU313-800* | 45.3 |
| | *UCTU313+WU900* | | | 1340 | 1280 | | 900 | | | | | | | | | *WU313-900* | 47.6 |
| 70 | UCTU314+WU500 | 150 | 295 | 960 | 900 | 200 | 500 | 78 | 33 | M18 | | UC314 | 104000 | 68000 | TU314 | WU314-500 | 40.8 |
| | *UCTU314+WU600* | | | 1060 | 1000 | | 600 | | | | | | | | | *WU314-600* | 43.1 |
| | *UCTU314+WU700* | | | 1160 | 1100 | | 700 | | | | | | | | | *WU314-700* | 45.4 |
| | *UCTU314+WU800* | | | 1260 | 1200 | | 800 | | | | | | | | | *WU314-800* | 47.8 |
| | *UCTU314+WU900* | | | 1360 | 1300 | | 900 | | | | | | | | | *WU314-900* | 50.1 |
| 75 | UCTU315+WU500 | 155 | 305 | 980 | 920 | 210 | 500 | 82 | 32 | M18 | | UC315 | 114000 | 76900 | TU315 | WU315-500 | 43.6 |
| | *UCTU315+WU600* | | | 1080 | 1020 | | 600 | | | | | | | | | *WU315-600* | 45.9 |
| | *UCTU315+WU700* | | | 1180 | 1120 | | 700 | | | | | | | | | *WU315-700* | 48.3 |
| | *UCTU315+WU800* | | | 1280 | 1220 | | 800 | | | | | | | | | *WU315-800* | 50.6 |
| | *UCTU315+WU900* | | | 1380 | 1320 | | 900 | | | | | | | | | *WU315-900* | 52.9 |
| 80 | UCTU316+WU500 | 160 | 315 | 1000 | 940 | 220 | 500 | 86 | 34 | M18 | | UC316 | 123000 | 86400 | TU316 | WU316-500 | 45.1 |
| | *UCTU316+WU600* | | | 1100 | 1040 | | 600 | | | | | | | | | *WU316-600* | 47.4 |
| | *UCTU316+WU700* | | | 1200 | 1140 | | 700 | | | | | | | | | *WU316-700* | 49.7 |
| | *UCTU316+WU800* | | | 1300 | 1240 | | 800 | | | | | | | | | *WU316-800* | 52.0 |
| | *UCTU316+WU900* | | | 1400 | 1340 | | 900 | | | | | | | | | *WU316-900* | 54.4 |
| 85 | UCTU317+WU500 | 165 | 325 | 1020 | 960 | 230 | 500 | 96 | 40 | M18 | | UC317 | 132000 | 96500 | TU317 | WU317-500 | 49.8 |
| | *UCTU317+WU600* | | | 1120 | 1060 | | 600 | | | | | | | | | *WU317-600* | 52.1 |
| | *UCTU317+WU700* | | | 1220 | 1160 | | 700 | | | | | | | | | *WU317-700* | 54.4 |
| | *UCTU317+WU800* | | | 1320 | 1260 | | 800 | | | | | | | | | *WU317-800* | 56.7 |
| | *UCTU317+WU900* | | | 1420 | 1360 | | 900 | | | | | | | | | *WU317-900* | 59.0 |
| 90 | UCTU318+WU500 | 170 | 335 | 1050 | 990 | 245 | 500 | 96 | 40 | M18 | | UC318 | 143000 | 107200 | TU318 | WU318-500 | 53.1 |
| | *UCTU318+WU600* | | | 1150 | 1090 | | 600 | | | | | | | | | *WU318-600* | 55.4 |
| | *UCTU318+WU700* | | | 1250 | 1190 | | 700 | | | | | | | | | *WU318-700* | 57.7 |
| | *UCTU318+WU800* | | | 1350 | 1290 | | 800 | | | | | | | | | *WU318-800* | 60.1 |
| | *UCTU318+WU900* | | | 1450 | 1390 | | 900 | | | | | | | | | *WU318-900* | 62.4 |

Remarks: 1. Please contact NACHI for *unit numbers appearing* in italic.
2. Grease nipple: PF1/8

# Cylindrical Cartridge Units

## UCC type

### With set screws

### Cylindrical bore

Shaft dia.: 12～140mm

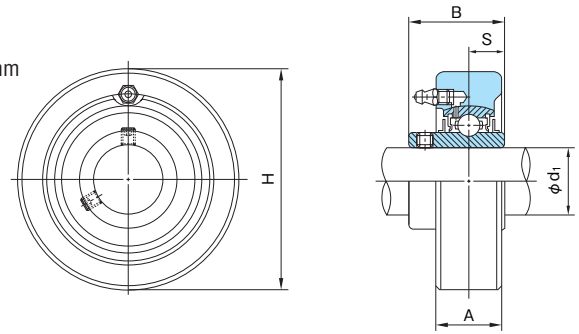


1N=0.102kgf

| Shaft dia. $d_1$ (mm) | Unit No. | Boundary dimensions (mm) | | | | Bearings | | | Housing No. | Mass of Unit (kg) |
|---|---|---|---|---|---|---|---|---|---|---|
| | | H | A | B | S | No. | Basic load rating (N) Cr | Basic load rating (N) Cor | | |
| 12 | UCC201 | 72 | 20 | 31 | 12.7 | UC201 | 12800 | 6600 | C204 | 0.54 |
| 15 | UCC202 | 72 | 20 | 31 | 12.7 | UC202 | 12800 | 6600 | C204 | 0.52 |
| 17 | UCC203 | 72 | 20 | 31 | 12.7 | UC203 | 12800 | 6600 | C204 | 0.51 |
| 20 | UCC204 | 72 | 20 | 31 | 12.7 | UC204 | 12800 | 6600 | C204 | 0.49 |
| 25 | UCC205 | 80 | 22 | 34 | 14.3 | UC205 | 14000 | 7900 | C205 | 0.65 |
| | UCCX05 | 90 | 27 | 38.1 | 15.9 | UCX05 | 19600 | 11300 | CX05 | 1.0 |
| | UCC305 | 90 | 26 | 38 | 15 | UC305 | 21300 | 10900 | C305 | 1.1 |
| 30 | UCC206 | 85 | 27 | 38.1 | 15.9 | UC206 | 19600 | 11300 | C206 | 0.82 |
| | UCCX06 | 100 | 30 | 42.9 | 17.5 | UCX06 | 25900 | 15400 | CX06 | 1.3 |
| | UCC306 | 100 | 28 | 43 | 17 | UC306 | 26800 | 15000 | C306 | 1.3 |
| 35 | UCC207 | 90 | 28 | 42.9 | 17.5 | UC207 | 25900 | 15400 | C207 | 0.93 |
| | UCCX07 | 110 | 34 | 49.2 | 19 | UCX07 | 29300 | 17900 | CX07 | 1.9 |
| | UCC307 | 110 | 32 | 48 | 19 | UC307 | 33500 | 19200 | C307 | 1.8 |
| 40 | UCC208 | 100 | 30 | 49.2 | 19 | UC208 | 29300 | 17900 | C208 | 1.2 |
| | UCCX08 | 120 | 38 | 49.2 | 19 | UCX08 | 33000 | 20500 | CX08 | 2.3 |
| | UCC308 | 120 | 34 | 52 | 19 | UC308 | 40500 | 23900 | C308 | 2.2 |
| 45 | UCC209 | 110 | 31 | 49.2 | 19 | UC209 | 33000 | 20500 | C209 | 1.5 |
| | UCCX09 | 120 | 38 | 51.6 | 19 | UCX09 | 35500 | 23200 | CX09 | 2.3 |
| | UCC309 | 130 | 38 | 57 | 22 | UC309 | 51500 | 29500 | C309 | 2.7 |
| 50 | UCC210 | 120 | 33 | 51.6 | 19 | UC210 | 35500 | 23200 | C210 | 1.9 |
| | UCCX10 | 130 | 40 | 55.6 | 22.2 | UCX10 | 43000 | 29400 | CX10 | 2.8 |
| | UCC310 | 140 | 40 | 61 | 22 | UC310 | 61500 | 38200 | C310 | 3.3 |
| 55 | UCC211 | 125 | 35 | 55.6 | 22.2 | UC211 | 43000 | 29400 | C211 | 2.1 |
| | UCCX11 | 150 | 42 | 65.1 | 25.4 | UCX11 | 52500 | 36100 | CX11 | 4.7 |
| | UCC311 | 150 | 44 | 66 | 25 | UC311 | 71500 | 44800 | C311 | 3.9 |
| 60 | UCC212 | 130 | 38 | 65.1 | 25.4 | UC212 | 52500 | 36100 | C212 | 2.5 |
| | UCCX12 | 160 | 44 | 65.1 | 25.4 | UCX12 | 57500 | 40000 | CX12 | 5.1 |
| | UCC312 | 160 | 46 | 71 | 26 | UC312 | 81500 | 52000 | C312 | 4.8 |
| 65 | UCC213 | 140 | 40 | 65.1 | 25.4 | UC213 | 57500 | 40000 | C213 | 3.0 |
| | UCC313 | 170 | 50 | 75 | 30 | UC313 | 92500 | 59700 | C313 | 5.7 |
| 70 | UCC314 | 180 | 52 | 78 | 33 | UC314 | 104000 | 68000 | C314 | 6.6 |
| 75 | UCC315 | 190 | 55 | 82 | 32 | UC315 | 114000 | 76900 | C315 | 7.7 |
| 80 | UCC316 | 200 | 60 | 86 | 34 | UC316 | 123000 | 86400 | C316 | 8.9 |
| 85 | UCC317 | 215 | 64 | 96 | 40 | UC317 | 132000 | 96500 | C317 | 11.2 |
| 90 | UCC318 | 225 | 66 | 96 | 40 | UC318 | 143000 | 107200 | C318 | 12.3 |
| 95 | UCC319 | 240 | 72 | 103 | 41 | UC319 | 153000 | 118400 | C319 | 15.2 |





1N=0.102kgf

| Shaft dia. $d_1$ (mm) | Unit No. | Boundary dimensions (mm) | | | | Bearings | | | Housing No. | Mass of Unit (kg) |
|---|---|---|---|---|---|---|---|---|---|---|
| | | H | A | B | S | No. | Basic load rating (N) Cr | Basic load rating (N) Cor | | |
| 100 | UCC320 | 260 | 75 | 108 | 42 | UC320 | 173000 | 140400 | C320 | 19.2 |
| 105 | UCC321 | 260 | 75 | 112 | 44 | UC321 | 183000 | 153100 | C321 | 18.9 |
| 110 | UCC322 | 300 | 80 | 117 | 46 | UC322 | 205000 | 178800 | C322 | 28.1 |
| 120 | UCC324 | 320 | 90 | 126 | 51 | UC324 | 207000 | 184800 | C324 | 35.0 |
| 130 | UCC326 | 340 | 100 | 135 | 54 | UC326 | 229000 | 214300 | C326 | 42.2 |
| 140 | UCC328 | 360 | 100 | 145 | 59 | UC328 | 255000 | 246000 | C328 | 48.9 |

Remark: Grease nipple: 1/4-28UNF for bore number 13 and under
PF1/8 for bore number 14 and over

# Cylindrical Cartridge Units

## UKC+H type

### With adapter assembly

### Tapered bore

Shaft dia.: 20～125mm

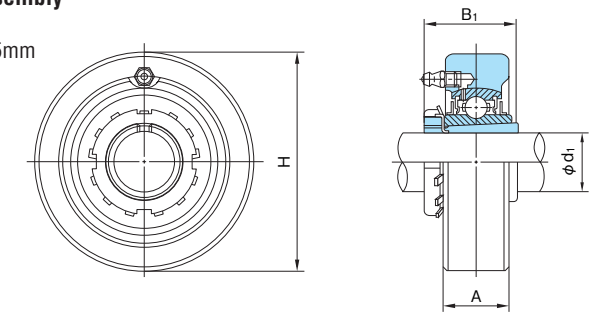


1N=0.102kgf

| Shaft dia. $d_1$ (mm) | Unit No. | Boundary dimensions (mm) | | | Bearings | | | Housing No. | Mass of Unit (kg) |
|---|---|---|---|---|---|---|---|---|---|
| | | H | A | $B_1$ | No. | Basic load rating (N) Cr | Basic load rating (N) Cor | | |
| 20 | UKC205+H2305 | 80 | 22 | 35 | UK205+H2305 | 14000 | 7900 | C205 | 0.70 |
| | UKCX05+H2305 | 90 | 27 | 35 | UKX05+H2305 | 19600 | 11300 | CX05 | 1.0 |
| | UKC305+H2305 | 90 | 26 | 35 | UK305+H2305 | 21300 | 10900 | C305 | 1.1 |
| 25 | UKC206+H2306 | 85 | 27 | 38 | UK206+H2306 | 19600 | 11300 | C206 | 0.90 |
| | UKCX06+H2306 | 100 | 30 | 38 | UKX06+H2306 | 25900 | 15400 | CX06 | 1.4 |
| | UKC306+H2306 | 100 | 28 | 38 | UK306+H2306 | 26800 | 15000 | C306 | 1.4 |
| 30 | UKC207+H2307 | 90 | 28 | 43 | UK207+H2307 | 25900 | 15400 | C207 | 0.99 |
| | UKCX07+H2307 | 110 | 34 | 43 | UKX07+H2307 | 29300 | 17900 | CX07 | 1.8 |
| | UKC307+H2307 | 110 | 32 | 43 | UK307+H2307 | 33500 | 19200 | C307 | 1.8 |
| 35 | UKC208+H2308 | 100 | 30 | 46 | UK208+H2308 | 29300 | 17900 | C208 | 1.3 |
| | UKCX08+H2308 | 120 | 38 | 46 | UKX08+H2308 | 33000 | 20500 | CX08 | 2.3 |
| | UKC308+H2308 | 120 | 34 | 46 | UK308+H2308 | 40500 | 23900 | C308 | 2.2 |
| 40 | UKC209+H2309 | 110 | 31 | 50 | UK209+H2309 | 33000 | 20500 | C209 | 1.7 |
| | UKCX09+H2309 | 120 | 38 | 50 | UKX09+H2309 | 35500 | 23200 | CX09 | 2.3 |
| | UKC309+H2309 | 130 | 38 | 50 | UK309+H2309 | 51500 | 29500 | C309 | 2.7 |
| 45 | UKC210+H2310 | 120 | 33 | 55 | UK210+H2310 | 35500 | 23200 | C210 | 2.1 |
| | UKCX10+H2310 | 130 | 40 | 55 | UKX10+H2310 | 43000 | 29400 | CX10 | 2.8 |
| | UKC310+H2310 | 140 | 40 | 55 | UK310+H2310 | 61500 | 38200 | C310 | 3.3 |
| 50 | UKC211+H2311 | 125 | 35 | 59 | UK211+H2311 | 43000 | 29400 | C211 | 2.3 |
| | UKCX11+H2311 | 150 | 42 | 59 | UKX11+H2311 | 52500 | 36100 | CX11 | 4.6 |
| | UKC311+H2311 | 150 | 44 | 59 | UK311+H2311 | 71500 | 44800 | C311 | 3.9 |
| 55 | UKC212+H2312 | 130 | 38 | 62 | UK212+H2312 | 52500 | 36100 | C212 | 2.6 |
| | UKCX12+H2312 | 160 | 44 | 62 | UKX12+H2312 | 57500 | 40000 | CX12 | 5.1 |
| | UKC312+H2312 | 160 | 46 | 62 | UK312+H2312 | 81500 | 52000 | C312 | 4.7 |
| 60 | UKC213+H2313 | 140 | 40 | 65 | UK213+H2313 | 57500 | 40000 | C212 | 3.1 |
| | UKC313+H2313 | 170 | 50 | 65 | UK313+H2313 | 92500 | 59700 | C312 | 5.6 |
| 65 | UKC315+H2315 | 190 | 55 | 73 | UK315+H2315 | 114000 | 76900 | C315 | 7.8 |
| 70 | UKC316+H2316 | 200 | 60 | 78 | UK316+H2316 | 123000 | 86400 | C316 | 9.1 |
| 75 | UKC317+H2317 | 215 | 64 | 82 | UK317+H2317 | 132000 | 96500 | C317 | 11.2 |
| 80 | UKC318+H2318 | 225 | 66 | 86 | UK318+H2318 | 143000 | 107200 | C318 | 12.5 |
| 85 | UKC319+H2319 | 240 | 72 | 90 | UK319+H2319 | 153000 | 118400 | C319 | 15.2 |
| 90 | UKC320+H2320 | 260 | 75 | 97 | UK320+H2320 | 173000 | 140400 | C320 | 19.2 |





1N=0.102kgf

| Shaft dia. $d_1$ (mm) | Unit No. | Boundary dimensions (mm) | | | Bearings | | | Housing No. | Mass of Unit (kg) |
|---|---|---|---|---|---|---|---|---|---|
| | | H | A | $B_1$ | No. | Basic load rating (N) Cr | Basic load rating (N) Cor | | |
| 100 | UKC322+H2322 | 300 | 80 | 105 | UK322+H2322 | 205000 | 178800 | C322 | 28.2 |
| 110 | UKC324+H2324 | 320 | 90 | 112 | UK324+H2324 | 207000 | 184800 | C324 | 34.5 |
| 115 | UKC326+H2326 | 340 | 100 | 121 | UK326+H2326 | 229000 | 214300 | C326 | 42.5 |
| 125 | UKC328+H2328 | 360 | 100 | 131 | UK328+H2328 | 255000 | 246000 | C328 | 49.2 |

Remark: Grease nipple: 1/4-28UNF for bore number 13 and under
PF1/8 for bore number 14 and over

# Hanger Units

## UCECH type

### With set screws

### Cylindrical bore

Shaft dia.: 12～60mm

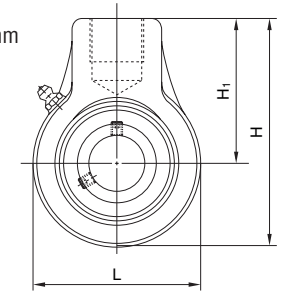


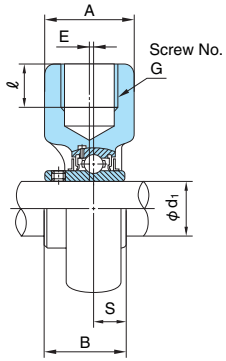


1N=0.102kgf

| Shaft dia. $d_1$ (mm) | Unit No. | Boundary dimensions (mm) | | | | | | | | | | Bearings | | | Housing No. | Mass of Unit (kg) |
|---|---|---|---|---|---|---|---|---|---|---|---|---|---|---|---|---|
| | | H | L | $H_1$ | A | G | ℓ | B | S | E | | No. | Basic load rating (N) Cr | Basic load rating (N) Cor | | |
| 12 | UCECH201 | 96 | 64 | 64 | 40 | PF3/4 | 19 | 31 | 12.7 | 0 | | UC201 | 12800 | 6600 | ECH204 | 0.85 |
| 15 | UCECH202 | 96 | 64 | 64 | 40 | PF3/4 | 19 | 31 | 12.7 | 0 | | UC202 | 12800 | 6600 | ECH204 | 0.83 |
| 17 | UCECH203 | 96 | 64 | 64 | 40 | PF3/4 | 19 | 31 | 12.7 | 0 | | UC203 | 12800 | 6600 | ECH204 | 0.82 |
| 20 | UCECH204 | 96 | 64 | 64 | 40 | PF3/4 | 19 | 31 | 12.7 | 0 | | UC204 | 12800 | 6600 | ECH204 | 0.80 |
| 25 | UCECH205 | 99 | 70 | 64 | 40 | PF3/4 | 19 | 34 | 14.3 | 0 | | UC205 | 14000 | 7900 | ECH205 | 0.74 |
| 30 | UCECH206 | 104 | 80 | 64 | 40 | PF3/4 | 19 | 38.1 | 15.9 | 0 | | UC206 | 19600 | 11300 | ECH206 | 0.91 |
| 35 | UCECH207 | 116 | 92 | 70 | 40 | PF3/4 | 19 | 42.9 | 17.5 | 0 | | UC207 | 25900 | 15400 | ECH207 | 1.2 |
| 40 | UCECH208 | 121 | 96 | 73 | 40 | PF3/4 | 19 | 49.2 | 19 | 2 | | UC208 | 29300 | 17900 | ECH208 | 1.4 |
| 45 | UCECH209 | 136 | 108 | 82 | 48 | PF1 | 21 | 49.2 | 19 | 4 | | UC209 | 33000 | 20500 | ECH209 | 1.8 |
| 50 | UCECH210 | 140 | 114 | 83 | 48 | PF1 | 21 | 51.6 | 19 | 5 | | UC210 | 35500 | 23200 | ECH210 | 1.9 |
| 55 | UCECH211 | 160 | 126 | 97 | 60 | PF1¼ | 28 | 55.6 | 22.2 | 6 | | UC211 | 43000 | 29400 | ECH211 | 2.3 |
| 60 | UCECH212 | 173 | 142 | 102 | 60 | PF1¼ | 28 | 65.1 | 25.4 | 9 | | UC212 | 52500 | 36100 | ECH212 | 4.2 |

Remark: Grease nipple: 1/4-28UNF

# Ball Bearings for Units

## UC type

### With set screws

### Cylindrical bore

Shaft dia.: 12～140mm

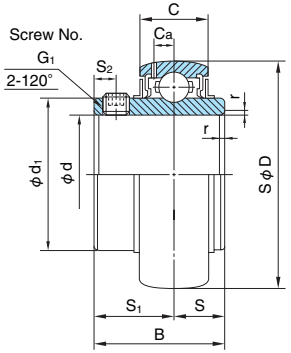


1N=0.102kgf

| Shaft dia. (mm) | Ball Bearing No. | Boundary dimensions (mm) | | | | | | | | | | | Basic load rating (N) | | Mass (kg) |
|---|---|---|---|---|---|---|---|---|---|---|---|---|---|---|---|
| | | d | D | B | C | r | S | $S_1$ | $S_2$ | $G_1$ | Ca | $d_1$ | Cr | Cor | |
| 12 | UC201 | 12 | 47 | 31 | 17 | 1 | 12.7 | 18.3 | 4.5 | M 6×0.75 | 4.5 | 29 | 12800 | 6600 | 0.21 |
| 15 | UC202 | 15 | 47 | 31 | 17 | 1 | 12.7 | 18.3 | 4.5 | M 6×0.75 | 4.5 | 29 | 12800 | 6600 | 0.19 |
| 17 | UC203 | 17 | 47 | 31 | 17 | 1 | 12.7 | 18.3 | 4.5 | M 6×0.75 | 4.5 | 29 | 12800 | 6600 | 0.18 |
| 20 | UC204 | 20 | 47 | 31 | 17 | 1.5 | 12.7 | 18.3 | 4.5 | M 6×0.75 | 4.5 | 29 | 12800 | 6600 | 0.16 |
| 25 | UC205 | 25 | 52 | 34 | 17 | 1.5 | 14.3 | 19.7 | 5 | M 6×0.75 | 4.5 | 34 | 14000 | 7900 | 0.19 |
| | UCX05 | 25 | 62 | 38.1 | 19 | 1.5 | 15.9 | 22.2 | 5 | M 6×0.75 | 5.1 | 40.5 | 19600 | 11300 | 0.37 |
| | UC305 | 25 | 62 | 38 | 21 | 2 | 15 | 23 | 6 | M 6×0.75 | 6.1 | 36.9 | 21300 | 10900 | 0.44 |
| 30 | UC206 | 30 | 62 | 38.1 | 19 | 1.5 | 15.9 | 22.2 | 5 | M 6×0.75 | 5.1 | 40.5 | 19600 | 11300 | 0.31 |
| | UCX06 | 30 | 72 | 42.9 | 20 | 1.5 | 17.5 | 25.4 | 6 | M 8×1 | 5.8 | 48 | 25900 | 15400 | 0.46 |
| | UC306 | 30 | 72 | 43 | 23 | 2 | 17 | 26 | 6 | M 6×0.75 | 6.7 | 45 | 26800 | 15000 | 0.56 |
| 35 | UC207 | 35 | 72 | 42.9 | 20 | 2 | 17.5 | 25.4 | 6 | M 8×1 | 5.8 | 48 | 25900 | 15400 | 0.48 |
| | UCX07 | 35 | 80 | 49.2 | 21 | 2 | 19 | 30.2 | 8 | M 8×1 | 6.2 | 53 | 29300 | 17900 | 0.74 |
| | UC307 | 35 | 80 | 48 | 25 | 2.5 | 19 | 29 | 8 | M 8×1 | 7.4 | 50.5 | 33500 | 19200 | 0.71 |
| 40 | UC208 | 40 | 80 | 49.2 | 21 | 2 | 19 | 30.2 | 8 | M 8×1 | 6.2 | 53 | 29300 | 17900 | 0.62 |
| | UCX08 | 40 | 85 | 49.2 | 22 | 2 | 19 | 30.2 | 8 | M 8×1 | 6.5 | 57.3 | 33000 | 20500 | 0.80 |
| | UC308 | 40 | 90 | 52 | 27 | 2.5 | 19 | 33 | 10 | M10×1.25 | 8.2 | 56 | 40500 | 23900 | 1.00 |
| 45 | UC209 | 45 | 85 | 49.2 | 22 | 2 | 19 | 30.2 | 8 | M 8×1 | 6.5 | 57.3 | 33000 | 20500 | 0.67 |
| | UCX09 | 45 | 90 | 51.6 | 23 | 2 | 19 | 32.6 | 9 | M10×1.25 | 6.5 | 63 | 35500 | 23200 | 0.92 |
| | UC309 | 45 | 100 | 57 | 30 | 2.5 | 22 | 35 | 10 | M10×1.25 | 9 | 63 | 51500 | 29500 | 1.28 |
| 50 | UC210 | 50 | 90 | 51.6 | 23 | 2 | 19 | 32.6 | 9 | M10×1.25 | 6.5 | 63 | 35500 | 23200 | 0.78 |
| | UCX10 | 50 | 100 | 55.6 | 24 | 2 | 22.2 | 33.4 | 9 | M10×1.25 | 7.3 | 70 | 43000 | 29400 | 1.21 |
| | UC310 | 50 | 110 | 61 | 32 | 3 | 22 | 39 | 12 | M12×1.5 | 10 | 70.5 | 61500 | 38200 | 1.65 |
| 55 | UC211 | 55 | 100 | 55.6 | 24 | 2.5 | 22.2 | 33.4 | 9 | M10×1.25 | 7.3 | 70 | 43000 | 29400 | 1.03 |
| | UCX11 | 55 | 110 | 65.1 | 26 | 2.5 | 25.4 | 39.7 | 10 | M10×1.25 | 7.7 | 77 | 52500 | 36100 | 1.72 |
| | UC311 | 55 | 120 | 66 | 34 | 3 | 25 | 41 | 12 | M12×1.5 | 10.7 | 76.5 | 71500 | 44800 | 2.07 |
| 60 | UC212 | 60 | 110 | 65.1 | 26 | 2.5 | 25.4 | 39.7 | 10 | M10×1.25 | 7.7 | 77 | 52500 | 36100 | 1.45 |
| | UCX12 | 60 | 120 | 65.1 | 27 | 2.5 | 25.4 | 39.7 | 10 | M10×1.25 | 8.3 | 82.1 | 57500 | 40000 | 1.97 |
| | UC312 | 60 | 130 | 71 | 36 | 3.5 | 26 | 45 | 12 | M12×1.5 | 11.5 | 82.5 | 81500 | 52000 | 2.59 |
| 65 | UC213 | 65 | 120 | 65.1 | 27 | 2.5 | 25.4 | 39.7 | 10 | M10×1.25 | 8.3 | 82.1 | 57500 | 40000 | 1.71 |
| | UCX13 | 65 | 125 | 74.6 | 29 | 2.5 | 30.2 | 44.4 | 12 | M12×1.5 | 8.7 | 87 | 62000 | 44000 | 2.33 |
| | UC313 | 65 | 140 | 75 | 38 | 3.5 | 30 | 45 | 12 | M12×1.5 | 12.2 | 88.5 | 92500 | 59700 | 3.15 |
| 70 | UC214 | 70 | 125 | 74.6 | 29 | 2.5 | 30.2 | 44.4 | 12 | M12×1.5 | 8.7 | 87 | 62000 | 44000 | 2.06 |
| | UCX14 | 70 | 130 | 77.8 | 30 | 2.5 | 33.3 | 44.5 | 12 | M12×1.5 | 9.2 | 91.5 | 66000 | 48200 | 2.57 |
| | UC314 | 70 | 150 | 78 | 40 | 3.5 | 33 | 45 | 12 | M12×1.5 | 13 | 95.2 | 104000 | 68000 | 3.83 |





1N=0.102kgf

| Shaft dia. (mm) | Ball Bearing No. | Boundary dimensions (mm) | | | | | | | | | | | Basic load rating (N) | | Mass (kg) |
|---|---|---|---|---|---|---|---|---|---|---|---|---|---|---|---|
| | | d | D | B | C | r | S | $S_1$ | $S_2$ | $G_1$ | Ca | $d_1$ | Cr | Cor | |
| 75 | UC215 | 75 | 130 | 77.8 | 30 | 2.5 | 33.3 | 44.5 | 14 | M12×1.5 | 9.2 | 91.5 | 66000 | 48200 | 2.22 |
| | UCX15 | 75 | 140 | 82.6 | 32 | 2.5 | 33.3 | 49.3 | 12 | M12×1.5 | 9.6 | 98.5 | 72500 | 53000 | 3.22 |
| | UC315 | 75 | 160 | 82 | 42 | 3.5 | 32 | 50 | 14 | M14×1.5 | 13.8 | 101.5 | 114000 | 76900 | 4.59 |
| 80 | UC216 | 80 | 140 | 82.6 | 32 | 3 | 33.3 | 49.3 | 14 | M12×1.5 | 9.6 | 98.5 | 72500 | 53000 | 2.82 |
| | UCX16 | 80 | 150 | 85.7 | 34 | 3 | 34.1 | 51.6 | 12 | M12×1.5 | 10.5 | 105 | 83500 | 61800 | 3.81 |
| | UC316 | 80 | 170 | 86 | 44 | 3.5 | 34 | 52 | 14 | M14×1.5 | 14.5 | 108 | 123000 | 86400 | 5.40 |
| 85 | UC217 | 85 | 150 | 85.7 | 34 | 3 | 34.1 | 51.6 | 14 | M12×1.5 | 10.5 | 105 | 83500 | 61800 | 3.38 |
| | UCX17 | 85 | 160 | 96 | 36 | 3 | 39.7 | 56.3 | 12 | M12×1.5 | 11.1 | 111.5 | 95500 | 71400 | 4.83 |
| | UC317 | 85 | 180 | 96 | 46 | 4 | 40 | 56 | 16 | M16×1.5 | 15 | 114.5 | 132000 | 96500 | 6.58 |
| 90 | UC218 | 90 | 160 | 96 | 36 | 3 | 39.7 | 56.3 | 15 | M12×1.5 | 11.1 | 111.5 | 95500 | 71400 | 4.34 |
| | UCX18 | 90 | 170 | 104 | 38 | 3 | 42.9 | 61.1 | 14 | M14×1.5 | 11.9 | 118 | 109000 | 81600 | 5.49 |
| | UC318 | 90 | 190 | 96 | 48 | 4 | 40 | 56 | 16 | M16×1.5 | 15.9 | 121 | 143000 | 107200 | 7.34 |
| 95 | UC319 | 95 | 200 | 103 | 50 | 4 | 41 | 62 | 16 | M16×1.5 | 16.7 | 127.5 | 153000 | 118400 | 8.70 |
| 100 | UCX20 | 100 | 190 | 117.5 | 42 | 3.5 | 49.2 | 68.3 | 16 | M16×1.5 | 13 | 132.5 | 134000 | 104700 | 9.04 |
| | UC320 | 100 | 215 | 108 | 54 | 4 | 42 | 66 | 18 | M18×1.5 | 18 | 135.5 | 173000 | 140400 | 10.8 |
| 105 | UC321 | 105 | 225 | 112 | 56 | 4 | 44 | 68 | 18 | M18×1.5 | 19 | 142 | 183000 | 153100 | 12.2 |
| 110 | UC322 | 110 | 240 | 117 | 60 | 4 | 46 | 71 | 18 | M18×1.5 | 21 | 152 | 205000 | 178800 | 14.3 |
| 120 | UC324 | 120 | 260 | 126 | 64 | 4 | 51 | 75 | 18 | M18×1.5 | 22 | 165 | 207000 | 184800 | 18.5 |
| 130 | UC326 | 130 | 280 | 135 | 68 | 5 | 54 | 81 | 20 | M20×1.5 | 23 | 178 | 229000 | 214300 | 23.0 |
| 140 | UC328 | 140 | 300 | 145 | 73 | 5 | 59 | 86 | 20 | M20×1.5 | 25 | 191.5 | 255000 | 246000 | 28.5 |

Remark: Chamfer dimensions **"r"** shown in the table are nominal dimension.

# Ball Bearings for Units

## UK+H type

### With adapter assembly

### Tapered bore

Shaft dia.: 20～125mm

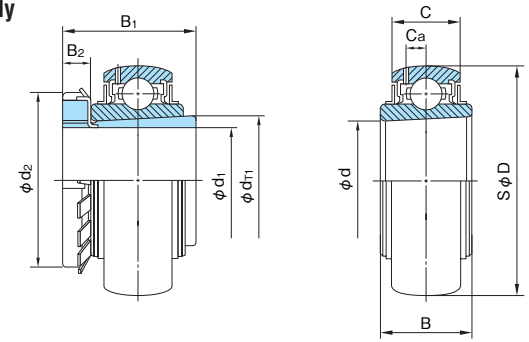


1N=0.102kgf

| Shaft dia. (mm) | Ball Bearing No. | Boundary dimensions (mm) | | | | | | | | | | Basic load rating (N) | | Mass (kg) |
|---|---|---|---|---|---|---|---|---|---|---|---|---|---|---|
| | | $d_1$ | D | $B_1$ | d | B | C | $C_a$ | $B_2$ | $d_2$ | $dT_1$ | Cr | Cor | |
| 20 | UK205+H2305 | 20 | 52 | 35 | 25 | 23 | 17 | 4.5 | 8 | 38 | 27.5 | 14000 | 7900 | 0.24 |
| | UKX05+H2305 | 20 | 62 | 35 | 25 | 26 | 19 | 5.1 | 8 | 38 | 27.5 | 19600 | 11300 | 0.37 |
| | UK305+H2305 | 20 | 62 | 35 | 25 | 26 | 21 | 6.1 | 8 | 38 | 27.5 | 21300 | 10900 | 0.48 |
| 25 | UK206+H2306 | 25 | 62 | 38 | 30 | 26 | 19 | 5.1 | 8 | 45 | 32.5 | 19600 | 11300 | 0.40 |
| | UKX06+H2306 | 25 | 72 | 38 | 30 | 27 | 20 | 5.8 | 8 | 45 | 32.5 | 25900 | 15400 | 0.54 |
| | UK306+H2306 | 25 | 72 | 38 | 30 | 29 | 23 | 6.7 | 8 | 45 | 32.5 | 26800 | 15000 | 0.59 |
| 30 | UK207+H2307 | 30 | 72 | 43 | 35 | 27 | 20 | 5.8 | 9 | 52 | 38 | 25900 | 15400 | 0.53 |
| | UKX07+H2307 | 30 | 80 | 43 | 35 | 29 | 21 | 6.2 | 9 | 52 | 38 | 29300 | 17900 | 0.70 |
| | UK307+H2307 | 30 | 80 | 43 | 35 | 31 | 25 | 7.4 | 9 | 52 | 38 | 33500 | 19200 | 0.74 |
| 35 | UK208+H2308 | 35 | 80 | 46 | 40 | 29 | 21 | 6.2 | 10 | 58 | 43 | 29300 | 17900 | 0.69 |
| | UKX08+H2308 | 35 | 85 | 46 | 40 | 30 | 22 | 6.5 | 10 | 58 | 43 | 33000 | 20500 | 0.81 |
| | UK308+H2308 | 35 | 90 | 46 | 40 | 34 | 27 | 8.2 | 10 | 58 | 43 | 40500 | 23900 | 1.01 |
| 40 | UK209+H2309 | 40 | 85 | 50 | 45 | 30 | 22 | 6.5 | 11 | 65 | 48.5 | 33000 | 20500 | 0.77 |
| | UKX09+H2309 | 40 | 90 | 50 | 45 | 31 | 23 | 6.5 | 11 | 65 | 48.5 | 35500 | 23200 | 0.94 |
| | UK309+H2309 | 40 | 100 | 50 | 45 | 37 | 30 | 9 | 11 | 65 | 48.5 | 51500 | 29500 | 1.31 |
| 45 | UK210+H2310 | 45 | 90 | 55 | 50 | 31 | 23 | 6.5 | 12 | 70 | 54 | 35500 | 23200 | 0.93 |
| | UKX10+H2310 | 45 | 100 | 55 | 50 | 33 | 24 | 7.3 | 12 | 70 | 54 | 43000 | 29400 | 1.22 |
| | UK310+H2310 | 45 | 110 | 55 | 50 | 40 | 32 | 10 | 12 | 70 | 54 | 61500 | 38200 | 1.68 |
| 50 | UK211+H2311 | 50 | 100 | 59 | 55 | 33 | 24 | 7.3 | 12 | 75 | 59 | 43000 | 29400 | 1.16 |
| | UKX11+H2311 | 50 | 110 | 59 | 55 | 36 | 26 | 7.7 | 12 | 75 | 59 | 52500 | 36100 | 1.54 |
| | UK311+H2311 | 50 | 120 | 59 | 55 | 43 | 34 | 10.7 | 12 | 75 | 59 | 71500 | 44800 | 2.06 |
| 55 | UK212+H2312 | 55 | 110 | 62 | 60 | 36 | 26 | 7.7 | 13 | 80 | 64.5 | 52500 | 36100 | 1.47 |
| | UKX12+H2312 | 55 | 120 | 62 | 60 | 38 | 27 | 8.3 | 13 | 80 | 64.5 | 57500 | 40000 | 1.89 |
| | UK312+H2312 | 55 | 130 | 62 | 60 | 46 | 36 | 11.5 | 13 | 80 | 64.5 | 81500 | 52000 | 2.53 |
| 60 | UK213+H2313 | 60 | 120 | 65 | 65 | 38 | 27 | 8.3 | 14 | 85 | 69.5 | 57500 | 40000 | 1.82 |
| | UKX13+H2313 | 60 | 125 | 65 | 65 | 40 | 29 | 8.7 | 14 | 85 | 69.5 | 62000 | 44000 | 2.09 |
| | UK313+H2313 | 60 | 140 | 65 | 65 | 48 | 38 | 12.2 | 14 | 85 | 69.5 | 92500 | 59700 | 3.07 |
| 65 | UK215+H2315 | 65 | 130 | 73 | 75 | 41 | 30 | 9.2 | 15 | 98 | 80 | 66000 | 48200 | 2.59 |
| | UKX15+H2315 | 65 | 140 | 73 | 75 | 44 | 32 | 9.6 | 15 | 98 | 80 | 72500 | 53000 | 3.25 |
| | UK315+H2315 | 65 | 160 | 73 | 75 | 54 | 42 | 13.8 | 15 | 98 | 80 | 114000 | 76900 | 4.74 |
| 70 | UK216+H2316 | 70 | 140 | 78 | 80 | 44 | 32 | 9.6 | 17 | 105 | 85.5 | 72500 | 53000 | 3.27 |
| | UKX16+H2316 | 70 | 150 | 78 | 80 | 46 | 34 | 10.5 | 17 | 105 | 85.5 | 83500 | 61800 | 3.86 |
| | UK316+H2316 | 70 | 170 | 78 | 80 | 57 | 44 | 14.5 | 17 | 105 | 85.5 | 123000 | 86400 | 5.62 |
| 75 | UK217+H2317 | 75 | 150 | 82 | 85 | 46 | 34 | 10.5 | 18 | 110 | 90.5 | 83500 | 61800 | 3.92 |
| | UKX17+H2317 | 75 | 160 | 82 | 85 | 49 | 36 | 11.1 | 18 | 110 | 90.5 | 95500 | 71400 | 4.72 |
| | UK317+H2317 | 75 | 180 | 82 | 85 | 60 | 46 | 15 | 18 | 110 | 90.5 | 132000 | 96500 | 6.56 |





1N=0.102kgf

| Shaft dia. (mm) | Ball Bearing No. | Boundary dimensions (mm) | | | | | | | | | | Basic load rating (N) | | Mass (kg) |
|---|---|---|---|---|---|---|---|---|---|---|---|---|---|---|
| | | $d_1$ | D | $B_1$ | d | B | C | $C_a$ | $B_2$ | $d_2$ | $dT_1$ | Cr | Cor | |
| 80 | UK218+H2318 | 80 | 160 | 86 | 90 | 49 | 36 | 11.1 | 18 | 120 | 96 | 95500 | 71400 | 4.68 |
| | UKX18+H2318 | 80 | 170 | 86 | 90 | 52 | 38 | 11.9 | 18 | 120 | 96 | 109000 | 81600 | 5.11 |
| | UK318+H2318 | 80 | 190 | 86 | 90 | 63 | 48 | 15.9 | 18 | 120 | 96 | 143000 | 107200 | 7.52 |
| 85 | UK319+H2319 | 85 | 200 | 90 | 95 | 66 | 50 | 16.7 | 19 | 125 | 101 | 153000 | 118400 | 8.72 |
| 90 | UKX20+H2320 | 90 | 190 | 97 | 100 | 58 | 42 | 13 | 20 | 130 | 106.5 | 134000 | 104700 | 8.10 |
| | UK320+H2320 | 90 | 215 | 97 | 100 | 72 | 54 | 18 | 20 | 130 | 106.5 | 173000 | 140400 | 10.8 |
| 100 | UK322+H2322 | 100 | 240 | 105 | 110 | 80 | 60 | 21 | 21 | 145 | 117 | 205000 | 178800 | 14.4 |
| 110 | UK324+H2324 | 110 | 260 | 112 | 120 | 86 | 64 | 22 | 22 | 155 | 127.5 | 207000 | 184800 | 18.0 |
| 115 | UK326+H2326 | 115 | 280 | 121 | 130 | 92 | 68 | 23 | 23 | 165 | 138.5 | 229000 | 214300 | 23.3 |
| 125 | UK328+H2328 | 125 | 300 | 131 | 140 | 98 | 73 | 25 | 24 | 180 | 149 | 255000 | 246000 | 28.8 |

# Ball Bearings for Units

## B type
**With set screws**
**Cylindrical bore**
Shaft dia.: 12～35mm

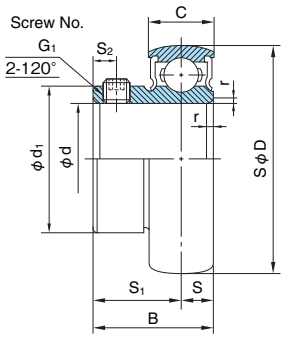


## KHAE type
**With eccentric collar**
**Cylindrical bore**
Shaft dia.: 12～35mm

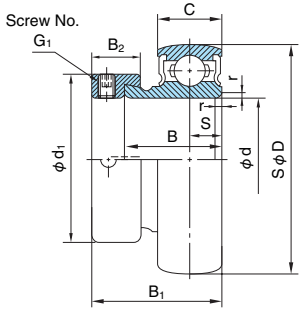


## B type

1N=0.102kgf

| Shaft dia. (mm) | Ball Bearing No. | Boundary dimensions (mm) | | | | | | | | | | | Basic load rating (N) | | Mass (kg) |
|---|---|---|---|---|---|---|---|---|---|---|---|---|---|---|---|
| | | d | D | B | C | r | S | $S_1$ | $S_2$ | $G_1$ | $d_1$ | | Cr | Cor | |
| **12** | **B1** | 12 | 40 | 22 | 12 | 1 | 6 | 16 | 4 | M5×0.8 | 24.7 | | 9550 | 4800 | 0.10 |
| **15** | **B2** | 15 | 40 | 22 | 12 | 1 | 6 | 16 | 4 | M5×0.8 | 24.7 | | 9550 | 4800 | 0.09 |
| **17** | **B3** | 17 | 40 | 22 | 12 | 1 | 6 | 16 | 4 | M5×0.8 | 24.7 | | 9550 | 4800 | 0.07 |
| **20** | **B4** | 20 | 47 | 24.7 | 14 | 1.5 | 7 | 17.7 | 4.5 | M5×0.8 | 29 | | 12800 | 6600 | 0.12 |
| **25** | **B5** | 25 | 52 | 27 | 15 | 1.5 | 7.5 | 19.5 | 5 | M6×0.75 | 34 | | 14000 | 7900 | 0.16 |
| **30** | **B6** | 30 | 62 | 30.3 | 16 | 1.5 | 8 | 22.3 | 5 | M6×0.75 | 40.5 | | 19600 | 11300 | 0.25 |
| **35** | **B7** | 35 | 72 | 32.9 | 17 | 2 | 8.5 | 24.4 | 6 | M8×1 | 48 | | 25900 | 15400 | 0.38 |

Remark: Chamfer dimensions **"r"** shown in the table are nominal dimension.

## KHAE type

1N=0.102kgf

| Shaft dia. (mm) | Ball Bearing No. | Boundary dimensions (mm) | | | | | | | | | | | Basic load rating (N) | | Mass (kg) |
|---|---|---|---|---|---|---|---|---|---|---|---|---|---|---|---|
| | | d | D | $B_1$ | B | C | r | S | $d_1$ | $B_2$ | G | | Cr | Cor | |
| **12** | **KH201AE** | 12 | 40 | 28.6 | 19.1 | 12 | 1 | 6.5 | 28.6 | 13.5 | M 6×0.75 | | 9550 | 4800 | 0.12 |
| **15** | **KH202AE** | 15 | 40 | 28.6 | 19.1 | 12 | 1 | 6.5 | 28.6 | 13.5 | M 6×0.75 | | 9550 | 4800 | 0.11 |
| **17** | **KH203AE** | 17 | 40 | 28.6 | 19.1 | 12 | 1 | 6.5 | 28.6 | 13.5 | M 6×0.75 | | 9550 | 4800 | 0.10 |
| **20** | **KH204AE** | 20 | 47 | 31 | 21.5 | 14 | 1.5 | 7.5 | 33.3 | 13.5 | M 6×0.75 | | 12800 | 6600 | 0.16 |
| **25** | **KH205AE** | 25 | 52 | 31 | 21.5 | 15 | 1.5 | 7.5 | 38.1 | 13.5 | M 6×0.75 | | 14000 | 7900 | 0.20 |
| **30** | **KH206AE** | 30 | 62 | 35.7 | 23.8 | 16 | 1.5 | 9 | 44.5 | 15.9 | M 8×1 | | 19600 | 11300 | 0.31 |
| **35** | **KH207AE** | 35 | 72 | 38.9 | 25.4 | 17 | 2 | 9.5 | 55.6 | 17.5 | M10×1.25 | | 25900 | 15400 | 0.49 |

Remark: Chamfer dimensions **"r"** shown in the table are nominal dimension.

# Silver series

## Ball Bearings for Units

### With eccentric collar
### Cylindrical bore
### U+ER type
Shaft dia.: 8～30mm

### MU+ER type (Stainless Silver Series)
Shaft dia.: 10～30mm

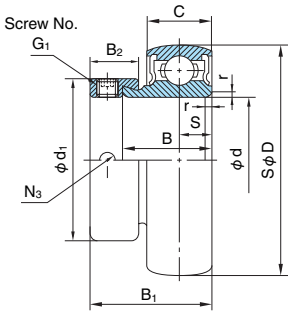


## U+ER type

1N=0.102kgf

| Shaft dia. (mm) | Ball Bearing No. | Boundary dimensions (mm) | | | | | | | | | | | Basic load rating (N) | | Mass (kg) |
|---|---|---|---|---|---|---|---|---|---|---|---|---|---|---|---|
| | | d | D | $B_1$ | B | C | r | S | $d_1$ | $B_2$ | $G_1$ | $N_3$ | Cr | Cor | |
| 10 | U000+ER | 10 | 26 | 17.5 | 11 | 8 | 0.5 | 4 | 17 | 8.5 | M4×0.7 | 3.5 | 4600 | 2000 | 30 |
| 12 | U001+ER | 12 | 28 | 17.5 | 11 | 8 | 0.5 | 4 | 19 | 8.5 | M4×0.7 | 3.5 | 5100 | 2400 | 36 |
| 15 | U002+ER | 15 | 32 | 18.5 | 12 | 9 | 0.5 | 4.5 | 22 | 8.5 | M4×0.7 | 3.5 | 5600 | 2800 | 50 |
| 17 | U003+ER | 17 | 35 | 20.5 | 13.5 | 10 | 0.5 | 5 | 25 | 9.5 | M4×0.7 | 3.5 | 6000 | 3300 | 62 |
| 20 | U004+ER | 20 | 42 | 24.5 | 16.5 | 12 | 1 | 6 | 30 | 11 | M5×0.8 | 5 | 9350 | 5100 | 104 |
| 25 | U005+ER | 25 | 47 | 25.5 | 17.5 | 12 | 1 | 6 | 36 | 12 | M5×0.8 | 5 | 10100 | 5800 | 133 |
| 30 | U006+ER | 30 | 55 | 26.5 | 18.5 | 13 | 1.5 | 6.5 | 42 | 12 | M5×0.8 | 5 | 13200 | 8300 | 186 |
| 8 | U 08+ER(1) | 8 | 22 | 15 | 10 | 7 | 0.3 | 3.5 | 14 | 7 | M3×0.5 | 2.5 | 3300 | 1360 | 16 |

Note: (1) U08X with set screws is available. U08X: B=12, d1=11.3, set screw 2-M3×0.5 S2=2.5 (side surface to set screw center)
Remark: Chamfer dimensions **"r"** shown in the table are nominal dimension.

## MU+ER type (Stainless Silver Series)

1N=0.102kgf

| Shaft dia. (mm) | Ball Bearing No. | Boundary dimensions (mm) | | | | | | | | | | | Basic load rating (N) | | Mass (kg) |
|---|---|---|---|---|---|---|---|---|---|---|---|---|---|---|---|
| | | d | D | $B_1$ | B | C | r | S | $d_1$ | $B_2$ | $G_1$ | $N_3$ | Cr | Cor | |
| 10 | MU000+ER | 10 | 26 | 17.5 | 11 | 8 | 0.5 | 4 | 17 | 8.5 | M4×0.7 | 3.5 | 3900 | 1550 | 30 |
| 12 | MU001+ER | 12 | 28 | 17.5 | 11 | 8 | 0.5 | 4 | 19 | 8.5 | M4×0.7 | 3.5 | 4300 | 1900 | 36 |
| 15 | MU002+ER | 15 | 32 | 18.5 | 12 | 9 | 0.5 | 4.5 | 22 | 8.5 | M4×0.7 | 3.5 | 4750 | 2250 | 50 |
| 17 | MU003+ER | 17 | 35 | 20.5 | 13.5 | 10 | 0.5 | 5 | 25 | 9.5 | M4×0.7 | 3.5 | 5100 | 2650 | 62 |
| 20 | MU004+ER | 20 | 42 | 24.5 | 16.5 | 12 | 1 | 6 | 30 | 11 | M5×0.8 | 5 | 7900 | 4000 | 104 |
| 25 | MU005+ER | 25 | 47 | 25.5 | 17.5 | 12 | 1 | 6 | 36 | 12 | M5×0.8 | 5 | 8600 | 4650 | 133 |
| 30 | MU006+ER | 30 | 55 | 26.5 | 18.5 | 13 | 1.5 | 6.5 | 42 | 12 | M5×0.8 | 5 | 11300 | 6600 | 186 |

Remark: Chamfer dimensions **"r"** shown in the table are nominal dimension.

NACHI

# Ball Bearings for Units

## UG+ER type

### With eccentric collar

### Cylindrical bore

Shaft dia.: 20～60mm

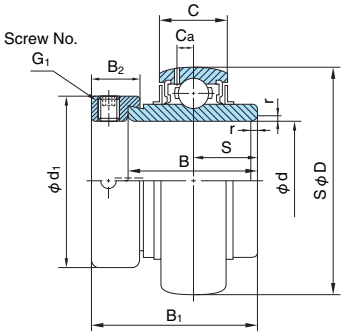


1N=0.102kgf

| Shaft dia. (mm) | Ball Bearing No. | Boundary dimensions (mm) | | | | | | | | | | | Basic load rating (N) | | Mass (kg) |
|---|---|---|---|---|---|---|---|---|---|---|---|---|---|---|---|
| | | d | D | $B_1$ | B | C | r | S | $d_1$ | $B_2$ | $G_1$ | | Cr | Cor | |
| **20** | **UG204+ER** | 20 | 47 | 43.7 | 34.2 | 17 | 1.5 | 17.1 | 33.3 | 13.5 | M 6×0.75 | | 12800 | 6600 | 0.21 |
| **25** | **UG205+ER** | 25 | 52 | 44.4 | 34.9 | 17 | 1.5 | 17.5 | 38.1 | 13.5 | M 6×0.75 | | 14000 | 7900 | 0.23 |
| **30** | **UG206+ER** | 30 | 62 | 48.4 | 36.5 | 19 | 1.5 | 18.3 | 44.5 | 15.9 | M 8×1 | | 19600 | 11300 | 0.37 |
| **35** | **UG207+ER** | 35 | 72 | 51.1 | 37.6 | 20 | 2 | 18.8 | 55.6 | 17.5 | M10×1.25 | | 25900 | 15400 | 0.60 |
| **40** | **UG208+ER** | 40 | 80 | 56.3 | 42.8 | 21 | 2 | 21.4 | 60.3 | 18.3 | M10×1.25 | | 29300 | 17900 | 0.76 |
| **45** | **UG209+ER** | 45 | 85 | 56.3 | 42.8 | 22 | 2 | 21.4 | 63.5 | 18.3 | M10×1.25 | | 33000 | 20500 | 0.79 |
| **50** | **UG210+ER** | 50 | 90 | 62.7 | 49.2 | 23 | 2 | 24.6 | 69.9 | 18.3 | M10×1.25 | | 35500 | 23200 | 0.91 |
| **55** | **UG211+ER** | 55 | 100 | 71.4 | 55.5 | 24 | 2.5 | 27.8 | 76.2 | 20.7 | M12×1.5 | | 43000 | 29400 | 1.26 |
| **60** | **UG212+ER** | 60 | 110 | 77.8 | 61.9 | 26 | 2.5 | 31 | 84.2 | 22.3 | M12×1.5 | | 52500 | 36100 | 1.70 |

Remark: Chamfer dimensions **"r"** shown in the table are nominal dimension.

# Ball Bearings for Units

## With stainless
## MUC type
## With set screws
## Cylindrical bore

Shaft dia.: 20～50mm

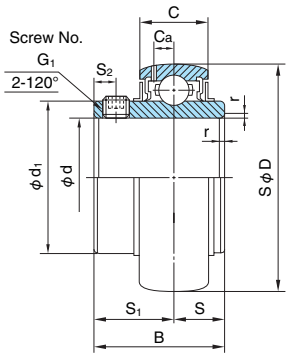


1N=0.102kgf

| Shaft dia. (mm) | Ball Bearing No. | Boundary dimensions (mm) | | | | | | | | | | | | Basic load rating (N) | | Mass (kg) |
|---|---|---|---|---|---|---|---|---|---|---|---|---|---|---|---|---|
| | | d | D | B | C | r | S | $S_1$ | $S_2$ | $G_1$ | $C_a$ | $d_1$ | | Cr | Cor | |
| **20** | **MUC204** | 20 | 47 | 31 | 17 | 1.5 | 12.7 | 18.3 | 4.5 | M 6×1 | 4.5 | 29 | | 10900 | 5300 | 0.16 |
| **25** | **MUC205** | 25 | 52 | 34 | 17 | 1.5 | 14.3 | 19.7 | 5 | M 6×1 | 4.5 | 34 | | 11900 | 6300 | 0.19 |
| **30** | **MUC206** | 30 | 62 | 38.1 | 19 | 1.5 | 15.9 | 22.2 | 5 | M 6×1 | 5.1 | 40.5 | | 16700 | 9050 | 0.31 |
| **35** | **MUC207** | 35 | 72 | 42.9 | 20 | 2 | 17.5 | 25.4 | 6 | M 8×1 | 5.8 | 48 | | 22000 | 12300 | 0.48 |
| **40** | **MUC208** | 40 | 80 | 49.2 | 21 | 2 | 19 | 30.2 | 8 | M 8×1 | 6.2 | 53 | | 24900 | 14300 | 0.62 |
| **45** | **MUC209** | 45 | 85 | 49.2 | 22 | 2 | 19 | 30.2 | 8 | M 8×1 | 6.5 | 57.3 | | 28100 | 16400 | 0.67 |
| **50** | **MUC210** | 50 | 90 | 51.6 | 23 | 2 | 19 | 32.6 | 9 | M10×1.25 | 6.5 | 63 | | 30200 | 18600 | 0.78 |

Remark: Chamfer dimensions **"r"** shown in the table are nominal dimension.

# Plummer Block Housings

Plummer Block housings ease to constitute bearing units by using with self-aligning ball bearings or spherical roller bearings.
NACHI Plummer Block housing design is improved in term of accuracy, strength and rigidity.

## ● Features

- Wide range of sizes and configurations allows selection of optimal housing.
- Low weight to strength ratio.
- For straight shaft, the bearings with tapered bore and adapter can be mounted at any selected shaft position.
- For stepped-shaft, the bearings with cylindrical bore are fixed by shaft nut.

Remark: Housings not listed in the dimensions tables are also manufactured, consult NACHI for more information.

**Table of contents**

| Type | | Symbol | Bore diameter on both sides | Applicable Bearing | Shaft Dia. (mm) | Page |
|---|---|---|---|---|---|---|
| Split type | SN Standard type | SN5 | Same | Tapered bore with adapter | 20～140 | page 545 |
| | | SN6 | | | 20～140 | |
| | | SN30 | | | 10～170 | |
| | | SN31 | | | 00～170 | |
| | SN Flat bottom type | SN5F | Same | Tapered bore with adapter | 20～140 | page 553 |
| | | SN6F | | | 20～140 | |
| | SN Large bore dia on both sides | SN2 | Same | Cylindrical bore | 25～160 | page 559 |
| | | SN3 | | | 25～ 85 | |
| | | SN2C | Difference | Cylindrical bore | 25～160 | |
| | | SN3C | | | 25～ 85 | |
| | SN Large bore dia on both sides Flat bottom | SN2F | Same | Cylindrical bore | 25～160 | page 565 |
| | | SN3F | | | 25～ 85 | |
| | | SN2FC | Difference | Cylindrical bore | 25～160 | |
| | | SN3FC | | | 25～ 85 | |
| | SD Standard type | SD5 | Same | Tapered bore with adapter | 150～300 | page 571 |
| | | SD6 | | | 150～260 | |
| | | SD30 | | | 150～300 | |
| | | SD31 | | | 150～300 | |
| One-piece type | V Standard type | V | Same | Tapered bore with adapter | 30～200 | page 575 |
| | | | Difference | Cylindrical bore | 35～220 | page 583 |

Remark: Please contact NACHI for housings not listed in table, special dimension, and with special accessories.

## 1. Materials for Plummer Block Housings

NACHI Plummer Blocks are made of gray cast iron FC200.
Spheroidal graphite iron castings FCD450 or carbon steel castings SC450 can be used for severe conditions such as vibration, shock and heavy load.
Materials for accessories are shown in right table.

**Materials for Accessories**

| Accessory | Material | Symbol |
|---|---|---|
| Bolt | Rolled steels for general structure | SS400 |
| Spring lock washer | High carbon steel wire rods | SWRH62B |
| Cover of V series | Gray iron castings | FC200 |
| Oil seal | Nitrile rubber | NBR |
| Drainage plug | Carbon steels for machine structure use | S10C |
| Eyebolt | Rolled steels for general structure | SS400 |
| Grease nipple | Free-cutting brass | C3604B |
| Locating ring | Gray iron castings | FC200 |
| Adapter sleeve, Locknut, Lockplate | Carbon steels for machine structure use or Rolled steels for general structure | S25C or SS400 |
| Plain washer | Rolled steels for general structure | SS400 |

## 2. Designations

### (1) Designations of Plummer Block Housings

Designations of Plummer Block Housings are shown as follows.

**• Split-housings**

**SN 2 20 D F2 C** | Supplementary symbol: **E NA P3 S0**

**Type symbol**
SN: Standard type
SD: Large type for heavy load

**Dimension series number**
5,6,30,31: Applied to Tapered bore bearing
2,3 : Applied to Cylindrical bore bearing

**Bore diameter number** (Same as bore diameter number of applied bearing)

**Material symbol**
(None): Gray cast iron FC200
D : Spheroidal graphite iron castings FCD450
S : Carbon steel castings SC450

**Bottom face symbol**
(None): Hollow bottom (Standard)
F : Flat bottom (without bolt hole)
F2 : Flat bottom (with 2 bolt holes)
F4 : Flat bottom (with 4 bolt holes)

**Bore dia. on both sides**
(None): Same
C : Difference

**Oil seal**
(None): GS seal(Standard)
ZS : ZF seal
SO : Without oil seal

**Drainage cap**
(None): Standard (one side except SD type)
PD : Both sides
P3 : PT3/8 threads for cap
P4 : PT1/2 threads for cap

**Grease nipple**
(None): A type nipple (Standard)
NB : B type nipple

**End cover**
(None): Without end cover
E : Insert type
EH : Bolt attach type
EM : one-piece type

Remarks 1. When symbol are omitted, shift to left side.
2. Threads and number of grease inlet/outlet are shown in tables.
3. Grease nipple A type is attached at grease inlet.





**• One-piece housings**

**V 215 D C 135 – 110**

**Type symbol: V**

**Housing seating diameter** (Same as outside diameter of bearing)

**Material symbol**
(None): Gray cast iron FC200
D : Spheroidal graphite iron castings FCD450
S : Carbon steel castings SC450

**Cover symbol**

**Shaft diameter of small diameter side**
Numerical: Shaft diameter (mm)
0: End cover

**Shaft diameter of large diameter side**
Numerical: Shaft diameter (mm)

Remarks 1. When symbol are omitted, shift to left side.
2. Supplementary symbols accord with split housing.
3. Threads and number of oil inlet/outlet are shown in tables.
4. Grease nipple of button-head type is attached at grease inlet.

### (2) Locating Rings

Locating ring for fixed side housing is identified as follows. locating ring should be prepared besides plummer block housings.
The dimension table show the designation and number of ring required for each bearing.

**SR 180 × 12.1 × 2**

**Locating ring symbol: SR**

**Outside diameter (mm)** (Same as outside diameter of bearing)

**Width (mm)**

**Required number**

Remark: The necessary number of locating rings is shown as "X number or required locating rings" immediately after the part number.

### (3) Combination of Plummer Block Housing, Bearing, Adapter and Locating Ring

The designations of combination are obtained by adding each with '+' as following order.

**SN520 + 22220EX + H320X + SR200×13.5 × 2**

Plummer block housing + Bearing + Adapter + Locating ring SR outer diameter (mm) × width (mm) × Number of locating ring

Remark: Designations for parts not required are omitted.

## 3. Tolerances for Plummer Block Housings

The tolerances of housing seating bore, width and height from mounting face to centerline of housing seating bore are shown in dimension tables.

The bore diameter and tolerance of the openings at both sides of housings are shown in right table.

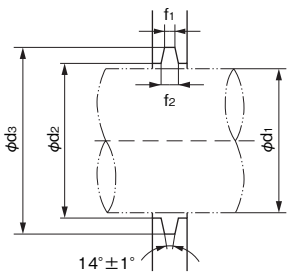


Side opening of housing

**Dimensions and Tolerances of Side Openings** Unit: mm

| Shaft Dia $d_1$ | $d_2$ Nominal | $d_2$ Tolerance (H12) | $d_3$ Nominal | $d_3$ Tolerance (H12) | $f_1$ Nominal | $f_1$ Tolerance (H13) | $f_2$ Nominal | Oil seal (Ref.) |
|---|---|---|---|---|---|---|---|---|
| **20** | 21.5 | +0.210 0 | 31 | +0.250 0 | 3 | +0.140 0 | 4.2 | GS 5 |
| **25** | 26.5 | | 38 | | 4 | +0.180 0 | 5.4 | GS 6 |
| **30** | 31.5 | +0.250 0 | 43 | | 4 | | 5.4 | GS 7 |
| **35** | 36.5 | | 48 | | 4 | | 5.4 | GS 8 |
| **40** | 41.5 | | 53 | +0.300 0 | 4 | | 5.4 | GS 9 |
| **45** | 46.5 | | 58 | | 4 | | 5.4 | GS 10 |
| **50** | 51.5 | +0.300 0 | 67 | | 5 | | 6.9 | GS 11 |
| **55** | 56 | | 72 | | 5 | | 6.9 | GS 12 |
| **60** | 62 | | 77 | | 5 | | 6.9 | GS 13 |
| **65** | 67 | | 82 | +0.350 0 | 5 | | 6.8 | GS 15 |
| **70** | 72 | | 89 | | 6 | | 8.1 | GS 16 |
| **75** | 77 | | 94 | | 6 | | 8.1 | GS 17 |
| **80** | 82 | +0.350 0 | 99 | | 6 | | 8.1 | GS 18 |
| **85** | 87 | | 104 | | 6 | | 8.1 | GS 19 |
| **90** | 92 | | 111 | | 7 | +0.220 0 | 9.3 | GS 20 |
| **95** | 97 | | 116 | | 7 | | 9.3 | GS 21 |
| **100** | 102 | | 125 | +0.400 0 | 8 | | 10.8 | GS 22 |
| **105** | 107 | | 130 | | 8 | | 10.8 | GS 23 |
| **110** | 113 | | 135 | | 8 | | 10.7 | GS 24 |
| **115** | 118 | | 140 | | 8 | | 10.7 | GS 26 |
| **120** | 123 | +0.400 0 | 145 | | 8 | | 10.7 | GS 27 |
| **125** | 128 | | 154 | | 9 | | 12.2 | GS 28 |
| **130** | 133 | | 159 | | 9 | | 12.2 | GS 29 |
| **135** | 138 | | 164 | | 9 | | 12.2 | GS 30 |
| **140** | 143 | | 173 | | 00 | | 13.7 | GS 32 |
| **145** | 148 | | 178 | | 10 | | 13.7 | GS 33 |
| **150** | 153 | | 183 | +0.460 0 | 10 | | 13.7 | GS 34 |
| **155** | 158 | | 188 | | 10 | | 13.7 | GS 35 |
| **160** | 163 | | 193 | | 10 | | 13.7 | GS 36 |
| **165** | 168 | | 198 | | 10 | | 13.7 | GS 37 |
| **170** | 173 | | 203 | | 10 | | 13.7 | GS 38 |
| **175** | 178 | | 208 | | 10 | | 13.7 | GS 39 |
| **180** | 183 | +0.460 0 | 213 | | 10 | | 13.7 | GS 40 |
| **190** | 193 | | 223 | | 10 | | 13.7 | GS 42 |
| **200** | 203 | | 240 | | 11 | | 15.5 | GS 44 |
| **210** | 213 | | 250 | | 11 | | 15.5 | GS 46 |
| **220** | 223 | | 260 | +0.520 0 | 11 | | 15.5 | GS 48 |
| **230** | 233 | | 270 | | 11 | | 15.5 | GS 50 |
| **240** | 243 | | 286 | | 12 | | 17.3 | GS 52 |
| **250** | 253 | +0.520 0 | 296 | | 12 | | 17.3 | GS 54 |
| **260** | 263 | | 306 | | 12 | | 17.3 | GS 56 |
| **270** | 273 | | 322 | +0.570 0 | 13 | | 19 | GS 58 |
| **280** | 283 | | 332 | | 13 | +0.270 0 | 19 | GS 60 |
| **300** | 303 | | 352 | | 13 | | 19 | GS 64 |
| **320** | 323 | +0.570 0 | 370 | | 14 | | 19.8 | GS 68 |
| **340** | 343 | | 390 | | 14 | | 19.8 | GS 72 |
| **360** | 363 | | 412 | +0.630 0 | 13 | | 19 | GS 76 |
| **380** | 383 | | 432 | | 13 | | 19 | GS 80 |
| **400** | 403 | +0.630 0 | 452 | | 14 | | 20 | GS 84 |
| **410** | 413 | | 460 | | 14 | | 19.8 | GS 88 |
| **430** | 433 | | 480 | | 14 | | 19.8 | GS 92 |
| **450** | 453 | | 505 | +0.700 0 | 14 | | 20.3 | GS 96 |

Remark: Number of oil seal is applicable to ZF seal with same number.





## 〔Reference〕

| Housing type \ Bearing type | Self-aligning Ball Bearings | | | | Spherical Roller Bearings | | | | | |
|---|---|---|---|---|---|---|---|---|---|---|
| | 12 | 22 | 13 | 23 | 230 | 231 | 222 | 232 | 213 | 223 |
| SN5<br>SN5F | 05K<br>~22K | 05K<br>~22K | – | – | – | – | 05K<br>~32K | 18K<br>~32K | – | – |
| SN6<br>SN6F | – | – | 05K<br>~22K | 05K<br>~22K | – | – | – | – | 05K<br>~22K | 08K<br>~32K |
| SN30 | – | – | – | – | 24K<br>~38K | – | – | – | – | – |
| SN31 | – | – | – | – | – | 22K<br>~38K | – | – | – | – |
| SN2<br>SN2F | 05<br>~22 | 05<br>~22 | – | – | – | – | 05<br>~32 | 18<br>~32 | – | – |
| SN3<br>SN3F | – | – | 05<br>~17 | 05<br>~17 | – | – | – | – | 05<br>~17 | 08<br>~17 |
| SD5 | – | – | – | – | – | – | 34K<br>~64K | – | – | – |
| SD6 | – | – | – | – | – | – | – | – | – | 34K<br>~56K |
| SD30 | – | – | – | – | 34K<br>~64K | – | – | – | – | – |
| SD31 | – | – | – | – | – | 34K<br>~64K | – | – | – | – |
| V | 08(K)<br>~22(K) | 08(K)<br>~22(K) | 07(K)<br>~22(K) | 07(K)<br>~22(K) | 22(K)<br>~44(K) | 22(K)<br>~40(K) | 08(K)<br>~38(K) | 22(K)<br>~38(K) | 07(K)<br>~22(K) | 08(K)<br>~32(K) |

# Plummer Block Housings

## SN5, SN6, SN30, SN31 Series
## for Bearing with Adapter Sleeve

Shaft Diameter: 20～55mm

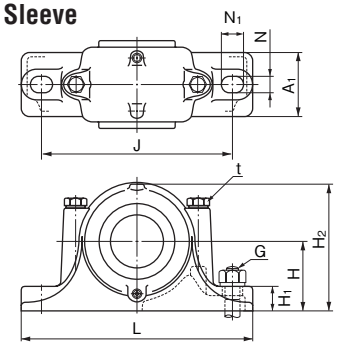


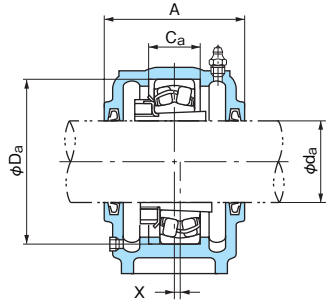


Through Shaft Type

Free side

Fixed side

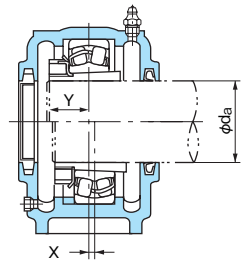


Shaft End Type

| Shaft dia. da (mm) | Dimensions (mm) | | | | | | | | | | | | | Mass (kg) (Reference) | Designations | | Applicable parts | | | | | | Y (Reference) |
|---|---|---|---|---|---|---|---|---|---|---|---|---|---|---|---|---|---|---|---|---|---|---|---|
| | Da (H8) | H (h13) | J | N | N1 | A | L | A1 | H1 | H2 | Ca (H13) | G (Nominal) | t (Nominal) (Reference) | | Through Shaft Type | Shaft End Type | Self-aligning ball bearings | Spherical roller bearings | Adapter sleeve | Oil seal | Locating ring Designations | Locating ring Q'ty | |
| 20 | 52 | 40 | 130 | 15 | 20 | 67 | 165 | 46 | 22 | 75 | 25 | M12 | M 8 | 1.1 | SN505 | SN505E | 1205K | — | H205X | GS 5 | SR52×5 | 2 | 17 |
| | | | | | | | | | | | | | | | | | 2205K | 22205EXK | H305X | | SR52×7 | 1 | 19 |
| | 62 | 50 | 150 | 15 | 20 | 80 | 185 | 52 | 22 | 90 | 34 | M12 | M 8 | 1.6 | SN605 | SN605E | 1305K | 21305EK | H305X | GS 5 | SR62×8.5 | 2 | 18 |
| | | | | | | | | | | | | | | | | | 2305K | — | H2305X | | SR62×10 | 1 | 22 |
| 25 | 62 | 50 | 150 | 15 | 20 | 77 | 185 | 52 | 22 | 90 | 30 | M12 | M 8 | 1.7 | SN506 | SN506E | 1206K | — | H206X | GS 6 | SR62×7 | 2 | 18 |
| | | | | | | | | | | | | | | | | | 2206K | 22206EXK | H306X | | SR62×10 | 1 | 20 |
| | 72 | 50 | 150 | 15 | 20 | 82 | 185 | 52 | 22 | 95 | 37 | M12 | M10 | 1.8 | SN606 | SN606E | 1306K | 21306EK | H306X | GS 6 | SR72×9 | 2 | 19 |
| | | | | | | | | | | | | | | | | | 2306K | — | H2306X | | SR72×10 | 1 | 23 |
| 30 | 72 | 50 | 150 | 15 | 20 | 82 | 185 | 52 | 22 | 95 | 33 | M12 | M10 | 1.9 | SN507 | SN507E | 1207K | — | H207X | GS 7 | SR72×8 | 2 | 19 |
| | | | | | | | | | | | | | | | | | 2207K | 22207EXK | H307X | | SR72×10 | 1 | 22 |
| | 80 | 60 | 170 | 15 | 20 | 90 | 205 | 60 | 25 | 110 | 41 | M12 | M10 | 2.6 | SN607 | SN607E | 1307K | 21307EK | H307X | GS 7 | SR80×10 | 2 | 21 |
| | | | | | | | | | | | | | | | | | 2307K | — | H2307X | | SR80×10 | 1 | 26 |
| 35 | 80 | 60 | 170 | 15 | 20 | 85 | 205 | 60 | 25 | 110 | 33 | M12 | M10 | 2.6 | SN508 | SN508E | 1208K | — | H208X | GS 8 | SR80×7.5 | 2 | 21 |
| | | | | | | | | | | | | | | | | | 2208K | 22208EXK | H308X | | SR80×10 | 1 | 23 |
| | 90 | 60 | 170 | 15 | 20 | 95 | 205 | 60 | 25 | 115 | 43 | M12 | M10 | 2.9 | SN608 | SN608E | 1308K | 21308EK | H308X | GS 8 | SR90×10 | 2 | 23 |
| | | | | | | | | | | | | | | | | | 2308K | 22308EXK | H2308X | | SR90×10 | 1 | 28 |
| 40 | 85 | 60 | 170 | 15 | 20 | 85 | 205 | 60 | 25 | 112 | 31 | M12 | M10 | 2.8 | SN509 | SN509E | 1209K | — | H209X | GS 9 | SR85×6 | 2 | 22 |
| | | | | | | | | | | | | | | | | | 2209K | 22209EXK | H309X | | SR85×8 | 1 | 24 |
| | 100 | 70 | 210 | 18 | 23 | 105 | 255 | 70 | 28 | 130 | 46 | M16 | M12 | 4.1 | SN609 | SN609E | 1309K | 21309EK | H309X | GS 9 | SR100×10.5 | 2 | 25 |
| | | | | | | | | | | | | | | | | | 2309K | 22309EXK | H2309X | | SR100×10 | 1 | 31 |
| 45 | 90 | 60 | 170 | 15 | 20 | 90 | 205 | 60 | 25 | 115 | 33 | M12 | M10 | 3.0 | SN510 | SN510E | 1210K | — | H210X | GS10 | SR90×6.5 | 2 | 24 |
| | | | | | | | | | | | | | | | | | 2210K | 22210EXK | H310X | | SR90×10 | 1 | 25 |
| | 110 | 70 | 210 | 18 | 23 | 115 | 255 | 70 | 30 | 135 | 50 | M16 | M12 | 4.7 | SN610 | SN610E | 1310K | 21310EK | H310X | GS10 | SR110×11.5 | 2 | 27 |
| | | | | | | | | | | | | | | | | | 2310K | 22310EXK | H2310X | | SR110×10 | 1 | 34 |
| 50 | 100 | 70 | 210 | 18 | 23 | 95 | 255 | 70 | 28 | 130 | 33 | M16 | M12 | 4.5 | SN511 | SN511E | 1211K | — | H211X | GS11 | SR100×6 | 2 | 25 |
| | | | | | | | | | | | | | | | | | 2211K | 22211EXK | H311X | | SR100×8 | 1 | 27 |
| | 120 | 80 | 230 | 18 | 23 | 120 | 275 | 80 | 30 | 150 | 53 | M16 | M12 | 5.8 | SN611 | SN611E | 1311K | 21311EK | H311X | GS11 | SR120×12 | 2 | 29 |
| | | | | | | | | | | | | | | | | | 2311K | 22311EXK | H2311X | | SR120×10 | 1 | 36 |
| 55 | 110 | 70 | 210 | 18 | 23 | 105 | 255 | 70 | 30 | 135 | 38 | M16 | M12 | 5.0 | SN512 | SN512E | 1212K | — | H212X | GS12 | SR110×8 | 2 | 26 |
| | | | | | | | | | | | | | | | | | 2212K | 22212EXK | H312X | | SR110×10 | 1 | 29 |
| | 130 | 80 | 230 | 18 | 23 | 125 | 280 | 80 | 30 | 155 | 56 | M16 | M12 | 6.5 | SN612 | SN612E | 1312K | 21312EK | H312X | GS12 | SR130×12.5 | 2 | 31 |
| | | | | | | | | | | | | | | | | | 2312K | 22312EXK | H2312X | | SR130×10 | 1 | 39 |

Remarks: 1. Plummer block housings are housings with oil seals, a plug and a grease nipple only.
To make a complete unit, please order the corresponding bearing, adapter sleeve and locating rings shown in the table additionally.
2. The masses in the table do not include the bearing, adapter sleeve and locating rings but the bolts.
3. H8, H13 and h13 in the table means tolerance classes specified in JIS B 0401.
4. The tolerance of locating ring O.D. is h12, and 0 ~ -0.2 for the width.
5. When one locating ring is used for fixed-end, the offset (X dimension) of bearing center from the center of the plummer block housing is a half of the locating ring width.
6. The threads for plugs are PT1/8. SN505 does not have a drain hole.
7. ZF type oil seals are also available instead of GS type seals.
8. The dimension Y indicates the distance from the bearing center to the outer side face of the nut.

# Plummer Block Housings

## SN5, SN6, SN30, SN31 Series for Bearing with Adapter Sleeve

Shaft Diameter: 60～90mm

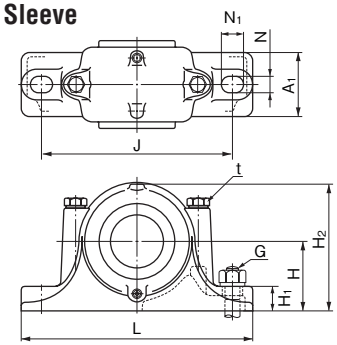


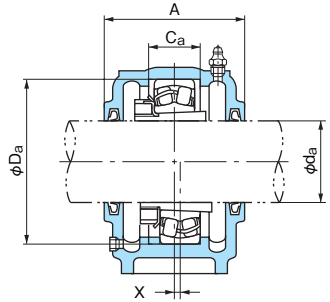


Through Shaft Type

Free side

Fixed side

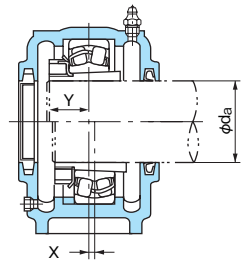


Shaft End Type

| Shaft dia. da (mm) | Dimensions (mm) | | | | | | | | | | | | | Mass (kg) (Reference) | Designations | | Applicable parts | | | | | | Y (Reference) |
|---|---|---|---|---|---|---|---|---|---|---|---|---|---|---|---|---|---|---|---|---|---|---|---|
| | Da (H8) | H (h13) | J | N | N1 | A | L | A1 | H1 | H2 | Ca (H13) | G (Nominal) | t (Nominal) (Reference) | | Through Shaft Type | Shaft End Type | Self-aligning ball bearings | Spherical roller bearings | Adapter sleeve | Oil seal | Locating ring Designations | Locating ring Q'ty | |
| 60 | 120 | 80 | 230 | 18 | 23 | 110 | 275 | 80 | 30 | 150 | 43 | M16 | M12 | 5.6 | SN513 | SN513E | 1213K | — | H213X | GS13 | SR120×10 | 2 | 28 |
| | | | | | | | | | | | | | | | | | 2213K | 22213EXK | H313X | | SR120×12 | 1 | 32 |
| | 140 | 95 | 260 | 22 | 27 | 130 | 315 | 90 | 32 | 175 | 58 | M20 | M16 | 8.7 | SN613 | SN613E | 1313K | 21313EK | H313X | GS13 | SR140×12.5 | 2 | 33 |
| | | | | | | | | | | | | | | | | | 2313K | 22313EXK | H2313X | | SR140×10 | 1 | 40 |
| 65 | 130 | 80 | 230 | 18 | 23 | 115 | 280 | 80 | 30 | 155 | 41 | M16 | M12 | 7.0 | SN515 | SN515E | 1215K | — | H215X | GS15 | SR130×8 | 2 | 30 |
| | | | | | | | | | | | | | | | | | 2215K | 22215EXK | H315X | | SR130×10 | 1 | 33 |
| | 160 | 100 | 290 | 22 | 27 | 140 | 345 | 100 | 35 | 195 | 65 | M20 | M16 | 11 | SN615 | SN615E | 1315K | 21315EK | H315X | GS15 | SR160×14 | 2 | 36 |
| | | | | | | | | | | | | | | | | | 2315K | 22315EXK | H2315X | | SR160×10 | 1 | 45 |
| 70 | 140 | 95 | 260 | 22 | 27 | 120 | 315 | 90 | 32 | 175 | 43 | M20 | M16 | 9.0 | SN516 | SN516E | 1216K | — | H216X | GS16 | SR140×8.5 | 2 | 32 |
| | | | | | | | | | | | | | | | | | 2216K | 22216EXK | H316X | | SR140×10 | 1 | 36 |
| | 170 | 112 | 290 | 22 | 27 | 145 | 345 | 100 | 35 | 212 | 68 | M20 | M16 | 13 | SN616 | SN616E | 1316K | 21316EK | H316X | GS16 | SR170×14.5 | 2 | 39 |
| | | | | | | | | | | | | | | | | | 2316K | 22316EXK | H2316X | | SR170×10 | 1 | 48 |
| 75 | 150 | 95 | 260 | 22 | 27 | 125 | 320 | 90 | 32 | 185 | 46 | M20 | M16 | 10 | SN517 | SN517E | 1217K | — | H217X | GS17 | SR150×9 | 2 | 34 |
| | | | | | | | | | | | | | | | | | 2217K | 22217EXK | H317X | | SR150×10 | 1 | 38 |
| | 180 | 112 | 320 | 26 | 32 | 155 | 380 | 110 | 40 | 223 | 70 | M24 | M20 | 15 | SN617 | SN617E | 1317K | 21317EK | H317X | GS17 | SR180×14.5 | 2 | 41 |
| | | | | | | | | | | | | | | | | | 2317K | 22317EXK | H2317X | | SR180×10 | 1 | 50 |
| 80 | 160 | 100 | 290 | 22 | 27 | 145 | 345 | 100 | 35 | 195 | 62.4 | M20 | M16 | 13 | SN518 | SN518E | 1218K | — | H218X | GS18 | SR160×16.2 | 2 | 35 |
| | | | | | | | | | | | | | | | | | 2218K | 22218EXK | H318X | | SR160×11.2 | 2 | 40 |
| | | | | | | | | | | | | | | | | | — | 23218EK | H2318X | | SR160×10 | 1 | 46 |
| | 190 | 112 | 320 | 26 | 32 | 160 | 380 | 110 | 40 | 230 | 74 | M24 | M20 | 19 | SN618 | SN618E | 1318K | 21318EK | H318X | GS18 | SR190×15.5 | 2 | 42 |
| | | | | | | | | | | | | | | | | | 2318K | 22318EXK | H2318X | | SR190×10 | 1 | 52 |
| 85 | 170 | 112 | 290 | 22 | 27 | 140 | 345 | 100 | 35 | 210 | 53 | M20 | M16 | 15 | SN519 | SN519E | 1219K | — | H219X | GS19 | SR170×10.5 | 2 | 37 |
| | | | | | | | | | | | | | | | | | 2219K | 22219EXK | H319X | | SR170×10 | 1 | 43 |
| | 200 | 125 | 350 | 26 | 32 | 170 | 410 | 120 | 45 | 250 | 77 | M24 | M20 | 22 | SN619 | SN619E | 1319K | 21319EK | H319X | GS19 | SR200×16 | 2 | 44 |
| | | | | | | | | | | | | | | | | | 2319K | 22319EXK | H2319X | | SR200×10 | 1 | 55 |
| 90 | 180 | 112 | 320 | 26 | 32 | 160 | 380 | 110 | 40 | 218 | 70.3 | M24 | M20 | 19 | SN520 | SN520E | 1220K | — | H220X | GS20 | SR180×18.1 | 2 | 39 |
| | | | | | | | | | | | | | | | | | 2220K | 22220EXK | H320X | | SR180×12.1 | 2 | 45 |
| | | | | | | | | | | | | | | | | | — | 23220EK | H2320X | | SR180×10 | 1 | 52 |
| | 215 | 140 | 350 | 26 | 32 | 175 | 410 | 120 | 45 | 270 | 83 | M24 | M20 | 25 | SN620 | SN620E | 1320K | 21320EK | H320X | GS20 | SR215×18 | 2 | 46 |
| | | | | | | | | | | | | | | | | | 2320K | 22320EXK | H2320X | | SR215×10 | 1 | 59 |

Remarks: 1. Plummer block housings are housings with oil seals, a plug and a grease nipple only.
To make a complete unit, please order the corresponding bearing, adapter sleeve and locating rings shown in the table additionally.
2. The masses in the table do not include the bearing, adapter sleeve and locating rings but the bolts.
3. H8, H13 and h13 in the table means tolerance classes specified in JIS B 0401.
4. The tolerance of locating ring O.D. is h12, and 0 ~ -0.2 for the width.
5. Plummer block housings SN3028, SN3126, SN524, SN620 and larger are provided with eye bolts.
6. When one locating ring is used for fixed-end, the offset (X dimension) of bearing center from the center of the plummer block housing is a half of the locating ring width.
7. The threads for plugs are PT1/8 for SN519, SN616 and smaller, and PT1/4 for the others.
8. ZF type oil seals are also available instead of GS type seals.
9. The dimension Y indicates the distance from the bearing center to the outer side face of the nut.

# Plummer Block Housings

## SN5, SN6, SN30, SN31 Series for Bearing with Adapter Sleeve

Shaft Diameter: 100～135mm

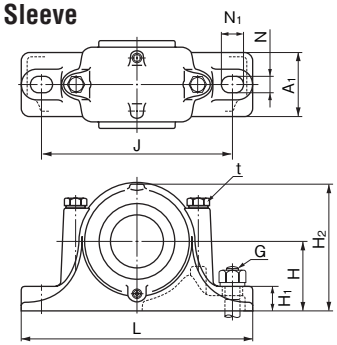


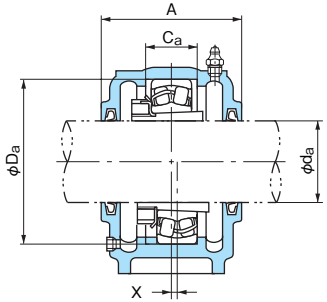


Through Shaft Type

Free side

Fixed side

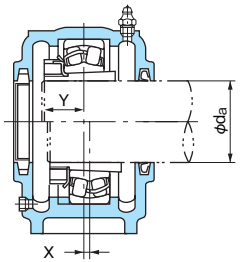


Shaft End Type

| Shaft dia. da (mm) | Dimensions (mm) | | | | | | | | | | | | | Mass (kg) (Reference) | Designations | | Applicable parts | | | | | | Y (Reference) |
|---|---|---|---|---|---|---|---|---|---|---|---|---|---|---|---|---|---|---|---|---|---|---|---|
| | Da (H8) | H (h13) | J | N | N1 | A | L | A1 | H1 | H2 | Ca (H13) | G (Nominal) | t (Nominal) (Reference) | | Through Shaft Type | Shaft End Type | Self-aligning ball bearings | Spherical roller bearings | Adapter sleeve | Oil seal | Locating ring Designations | Locating ring Q'ty | |
| 100 | 180 | 112 | 320 | 26 | 32 | 155 | 380 | 110 | 40 | 223 | 66 | M24 | M20 | 18 | SN3122 | SN3122E | — | 23122EK | H3122X | GS22 | SR180×10 | 1 | 51 |
| | 200 | 125 | 350 | 26 | 32 | 175 | 410 | 120 | 45 | 240 | 80 | M24 | M20 | 20 | SN522 | SN522E | 1222K | — | H222X | GS22 | SR200×21 | 2 | 42 |
| | | | | | | | | | | | | | | | | | 2222K | 22222EXK | H322X | | SR200×13.5 | 2 | 50 |
| | | | | | | | | | | | | | | | | | — | 23222EK | H2322X | | SR200×10 | 1 | 58 |
| | 240 | 150 | 390 | 28 | 36 | 190 | 450 | 130 | 50 | 300 | 90 | M24 | M24 | 32 | SN622 | SN622E | 1322K | 21322EK | H322X | GS22 | SR240×20 | 2 | 48 |
| | | | | | | | | | | | | | | | | | 2322K | 22322EXK | H2322X | | SR240×10 | 1 | 63 |
| 110 | 180 | 112 | 320 | 26 | 32 | 150 | 380 | 110 | 40 | 223 | 56 | M24 | M20 | 16 | SN3024 | SN3024E | — | 23024EK | H3024X | GS24 | SR180×10 | 1 | 47 |
| | 200 | 125 | 350 | 26 | 32 | 165 | 410 | 120 | 45 | 245 | 72 | M24 | M20 | 20 | SN3124 | SN3124E | — | 23124EK | H3124X | GS24 | SR200×10 | 1 | 55 |
| | 215 | 140 | 350 | 26 | 32 | 185 | 410 | 120 | 45 | 270 | 86 | M24 | M20 | 25 | SN524 | SN524E | — | 22224EK | H3124X | GS24 | SR215×14 | 2 | 53 |
| | | | | | | | | | | | | | | | | | — | 23224EK | H2324X | | SR215×10 | 1 | 62 |
| | 260 | 160 | 450 | 33 | 42 | 200 | 530 | 160 | 60 | 320 | 96 | M30 | M24 | 48 | SN624 | SN624E | — | 22324EK | H2324X | GS24 | SR260×10 | 1 | 67 |
| 115 | 200 | 125 | 350 | 26 | 32 | 160 | 410 | 120 | 45 | 245 | 62 | M24 | M20 | 19 | SN3026 | SN3026E | — | 23026EK | H3026 | GS26 | SR200×10 | 1 | 51 |
| | 210 | 140 | 350 | 26 | 32 | 170 | 410 | 120 | 45 | 270 | 74 | M24 | M20 | 26 | SN3126 | SN3126E | — | 23126EK | H3126 | GS26 | SR210×10 | 1 | 57 |
| | 230 | 150 | 380 | 28 | 36 | 190 | 445 | 130 | 50 | 290 | 90 | M24 | M24 | 30 | SN526 | SN526E | — | 22226EK | H3126 | GS26 | SR230×13 | 2 | 57 |
| | | | | | | | | | | | | | | | | | — | 23226EK | H2326 | | SR230×10 | 1 | 65 |
| | 280 | 170 | 470 | 33 | 42 | 210 | 550 | 160 | 60 | 340 | 103 | M30 | M24 | 56 | SN626 | SN626E | — | 22326EK | H2326 | GS26 | SR280×10 | 1 | 72 |
| 125 | 210 | 140 | 350 | 26 | 32 | 170 | 410 | 120 | 45 | 270 | 63 | M24 | M20 | 25 | SN3028 | SN3028E | — | 23028EK | H3028 | GS28 | SR210×10 | 1 | 53 |
| | 225 | 150 | 380 | 28 | 36 | 180 | 445 | 130 | 50 | 290 | 78 | M24 | M24 | 32 | SN3128 | SN3128E | — | 23128EK | H3128 | GS28 | SR225×10 | 1 | 60 |
| | 250 | 150 | 420 | 33 | 42 | 205 | 500 | 150 | 50 | 305 | 98 | M30 | M24 | 38 | SN528 | SN528E | — | 22228EXK | H3128 | GS28 | SR250×15 | 2 | 60 |
| | | | | | | | | | | | | | | | | | — | 23228EK | H2328 | | SR250×10 | 1 | 70 |
| | 300 | 180 | 520 | 35 | 45 | 235 | 610 | 170 | 65 | 365 | 112 | M30 | M30 | 72 | SN628 | SN628E | — | 22328EK | H2328 | GS28 | SR300×10 | 1 | 77 |
| 135 | 225 | 150 | 380 | 28 | 36 | 175 | 445 | 130 | 50 | 290 | 66 | M24 | M24 | 29 | SN3030 | SN3030E | — | 23030EK | H3030 | GS30 | SR225×10 | 1 | 56 |
| | 250 | 150 | 420 | 33 | 42 | 200 | 500 | 150 | 50 | 305 | 90 | M30 | M24 | 38 | SN3130 | SN3130E | — | 23130EK | H3130 | GS30 | SR250×10 | 1 | 68 |
| | 270 | 160 | 450 | 33 | 42 | 220 | 530 | 160 | 60 | 325 | 106 | M30 | M24 | 46 | SN530 | SN530E | — | 22230EK | H3130 | GS30 | SR270×16.5 | 2 | 65 |
| | | | | | | | | | | | | | | | | | — | 23230EK | H2330 | | SR270×10 | 1 | 76 |
| | 320 | 190 | 560 | 35 | 45 | 245 | 650 | 180 | 65 | 385 | 118 | M30 | M30 | 98 | SN630 | SN630E | — | 22330EK | H2330 | GS30 | SR320×10 | 1 | 82 |

Remarks: 1. Plummer block housings are housings with oil seals, a plug and a grease nipple only.
To make a complete unit, please order the corresponding bearing, adapter sleeve and locating rings shown in the table additionally.
2. The masses in the table do not include the bearing, adapter sleeve and locating rings but the bolts.
3. H8, H13 and h13 in the table means tolerance classes specified in JIS B 0401.
4. The tolerance of locating ring O.D. is h12, and 0 ~ -0.2 for the width.
5. Plummer block housings SN3028, SN3126, SN524, SN620 and larger are provided with eye bolts.
6. When one locating ring is used for fixed-end, the offset (X dimension) of bearing center from the center of the plummer block housing is a half of the locating ring width.
7. The threads for plugs are PT1/4.
8. ZF type oil seals are also available instead of GS type seals.
9. The dimension Y indicates the distance from the bearing center to the outer side face of the nut.

# Plummer Block Housings

## SN5, SN6, SN30, SN31 Series
## for Bearing with Adapter Sleeve

Shaft Diameter: 140～170mm

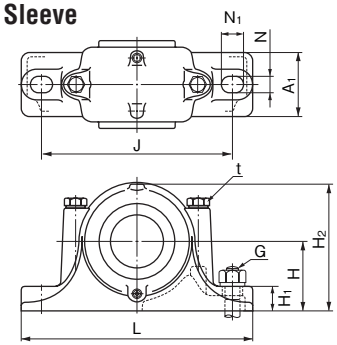


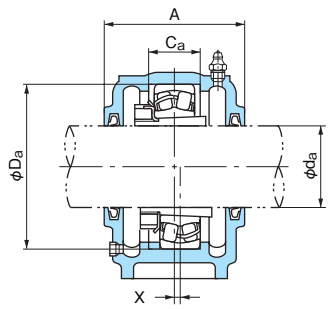


Through Shaft Type

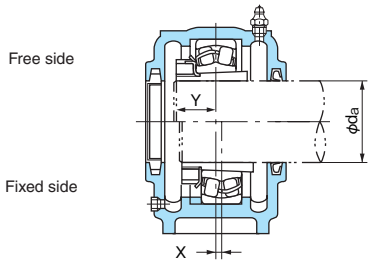


Shaft End Type

| Shaft dia. da (mm) | Dimensions (mm) | | | | | | | | | | | | | Mass (kg) (Reference) | Designations | | Applicable parts | | | | | Y (Reference) |
|---|---|---|---|---|---|---|---|---|---|---|---|---|---|---|---|---|---|---|---|---|---|---|
| | Da (H8) | H (h13) | J | N | N1 | A | L | A1 | H1 | H2 | Ca (H13) | G (Nominal) | t (Nominal) (Reference) | | Through Shaft Type | Shaft End Type | Spherical roller bearings | Adapter sleeve | Oil seal | Locating ring Designations | Locating ring Q'ty | |
| 140 | 240 | 150 | 390 | 28 | 36 | 190 | 450 | 130 | 50 | 300 | 70 | M24 | M24 | 32 | **SN3032** | **SN3032E** | 23032EK | H3032 | GS32 | SR240×10 | 1 | 61 |
| | 270 | 160 | 450 | 33 | 42 | 215 | 530 | 160 | 60 | 325 | 96 | M30 | M24 | 48 | **SN3132** | **SN3132E** | 23132EK | H3132 | GS32 | SR270×10 | 1 | 74 |
| | 290 | 170 | 470 | 33 | 42 | 235 | 550 | 160 | 60 | 345 | 114 | M30 | M24 | 50 | **SN532** | **SN532E** | 22232EK | H3132 | GS32 | SR290×17 | 2 | 71 |
| | | | | | | | | | | | | | | | | | 23232EK | H2332 | | SR290×10 | 1 | 83 |
| | 340 | 200 | 580 | 42 | 50 | 255 | 680 | 190 | 70 | 405 | 124 | M36 | M30 | 115 | **SN632** | **SN632E** | 22332EK | H2332 | GS32 | SR340×10 | 1 | 88 |
| 150 | 260 | 160 | 450 | 33 | 42 | 200 | 530 | 160 | 60 | 320 | 77 | M30 | M24 | 40 | **SN3034** | **SN3034E** | 23034EK | H3034 | GS34 | SR260×10 | 1 | 66 |
| | 280 | 170 | 470 | 33 | 42 | 220 | 550 | 160 | 60 | 340 | 98 | M30 | M24 | 58 | **SN3134** | **SN3134E** | 23134EK | H3134 | GS34 | SR280×10 | 1 | 76 |
| 160 | 280 | 170 | 470 | 33 | 42 | 210 | 550 | 160 | 60 | 340 | 84 | M30 | M24 | 50 | **SN3036** | **SN3036E** | 23036EK | H3036 | GS36 | SR280×10 | 1 | 70 |
| | 300 | 180 | 520 | 35 | 45 | 230 | 610 | 170 | 65 | 365 | 106 | M30 | M30 | 70 | **SN3136** | **SN3136E** | 23136EK | H3136 | GS36 | SR300×10 | 1 | 81 |
| 170 | 290 | 170 | 470 | 33 | 42 | 210 | 550 | 160 | 60 | 345 | 85 | M30 | M24 | 55 | **SN3038** | **SN3038E** | 23038EK | H3038 | GS38 | SR290×10 | 1 | 72 |
| | 320 | 190 | 560 | 35 | 45 | 240 | 650 | 180 | 65 | 385 | 114 | M30 | M30 | 90 | **SN3138** | **SN3138E** | 23138EK | H3138 | GS38 | SR320×10 | 1 | 86 |

Remarks: 1. Plummer block housings are housings with oil seals, a plug and a grease nipple only.
To make a complete unit, please order the corresponding bearing, adapter sleeve and locating rings shown in the table additionally.
2. The masses in the table do not include the bearing, adapter sleeve and locating rings but the bolts.
3. H8, H13 and h13 in the table means tolerance classes specified in JIS B 0401.
4. The tolerance of locating ring O.D. is h12, and 0 ~ -0.2 for the width.
5. Plummer block housings SN3028, SN3126,SN524, SN620 and larger are provided with eye bolts.
6. When one locating ring is used for fixed-end, the offset (X dimension) of bearing center from the center of the plummer block housing is a half of the locating ring width.
7. The threads for plugs are PT1/4.
8. ZF type oil seals are also available instead of GS type seals.
9. The dimension Y indicates the distance from the bearing center to the outer side face of the nut.

# Plummer Block Housings

## Flat Bottom Type SN5F, SN6F Series for Bearing with Adapter Sleeve

Shaft Diameter: 20～55mm

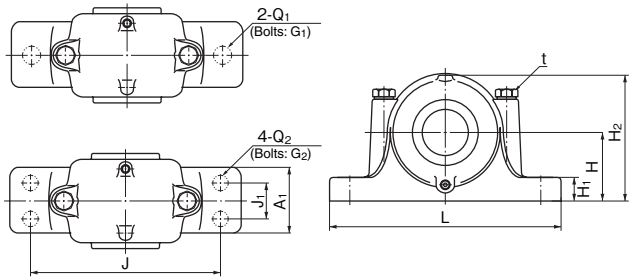


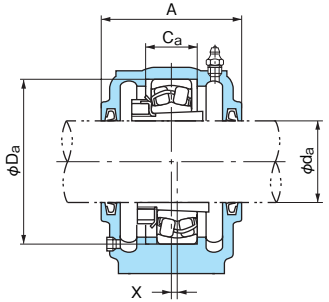


Through Shaft Type

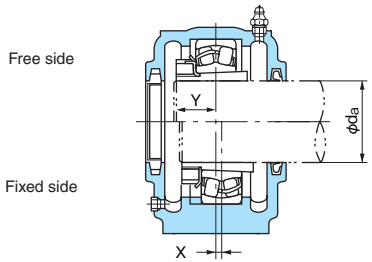


Shaft End Type

| Shaft dia. da (mm) | Dimensions (mm) | | | | | | | | Bolt holes (Reference) (mm) | | | | | | t (Nominal) (Reference) | Mass (kg) (Reference) | Designations | | Applicable parts | | | | | | Y (Reference) |
|---|---|---|---|---|---|---|---|---|---|---|---|---|---|---|---|---|---|---|---|---|---|---|---|---|---|
| | Da (H8) | H (h13) | A | L | A1 | H1 | H2 | Ca (H13) | J | Q1 | G1 (Nominal) | J1 | Q2 | G2 (Nominal) | | | Through Shaft Type | Shaft End Type | Self-aligning ball bearings | Spherical roller bearings | Adapter sleeve | Oil seal | Locating ring Designations | Locating ring Q'ty | |
| 20 | 52 | 40 | 67 | 165 | 46 | 22 | 75 | 25 | 130 | 15 | M12 | 25 | 10 | M 8 | M 8 | 1.7 | SN505F | SN505FE | 1205K | — | H205X | GS 5 | SR52×5 | 2 | 17 |
| | | | | | | | | | | | | | | | | | | | 2205K | 22205EXK | H305X | | SR52×7 | 1 | 19 |
| | 62 | 50 | 80 | 185 | 52 | 22 | 90 | 34 | 150 | 15 | M12 | 25 | 12 | M10 | M 8 | 2.4 | SN605F | SN605FE | 1305K | 21305EK | H305X | GS 5 | SR62×8.5 | 2 | 18 |
| | | | | | | | | | | | | | | | | | | | 2305K | — | H2305X | | SR62×10 | 1 | 22 |
| 25 | 62 | 50 | 77 | 185 | 52 | 22 | 90 | 30 | 150 | 15 | M12 | 25 | 12 | M10 | M 8 | 2.5 | SN506F | SN506FE | 1206K | — | H206X | GS 6 | SR62×7 | 2 | 18 |
| | | | | | | | | | | | | | | | | | | | 2206K | 22206EXK | H306X | | SR62×10 | 1 | 20 |
| | 72 | 50 | 82 | 185 | 52 | 22 | 95 | 37 | 150 | 15 | M12 | 25 | 12 | M10 | M10 | 2.5 | SN606F | SN606FE | 1306K | 21306EK | H306X | GS 6 | SR72×9 | 2 | 19 |
| | | | | | | | | | | | | | | | | | | | 2306K | — | H2306X | | SR72×10 | 1 | 23 |
| 30 | 72 | 50 | 82 | 185 | 52 | 22 | 95 | 33 | 150 | 15 | M12 | 25 | 12 | M10 | M10 | 2.6 | SN507F | SN507FE | 1207K | — | H207X | GS 7 | SR72×8 | 2 | 19 |
| | | | | | | | | | | | | | | | | | | | 2207K | 22207EXK | H307X | | SR72×10 | 1 | 22 |
| | 80 | 60 | 90 | 205 | 60 | 25 | 110 | 41 | 170 | 15 | M12 | 30 | 12 | M10 | M10 | 3.8 | SN607F | SN607FE | 1307K | 21307EK | H307X | GS 7 | SR80×10 | 2 | 21 |
| | | | | | | | | | | | | | | | | | | | 2307K | — | H2307X | | SR80×10 | 1 | 26 |
| 35 | 80 | 60 | 85 | 205 | 60 | 25 | 110 | 33 | 170 | 15 | M12 | 30 | 12 | M10 | M10 | 4.0 | SN508F | SN508FE | 1208K | — | H208X | GS 8 | SR80×7.5 | 2 | 21 |
| | | | | | | | | | | | | | | | | | | | 2208K | 22208EXK | H308X | | SR80×10 | 1 | 23 |
| | 90 | 60 | 95 | 205 | 60 | 25 | 115 | 43 | 170 | 15 | M12 | 30 | 12 | M10 | M10 | 4.0 | SN608F | SN608FE | 1308K | 21308EK | H308X | GS 8 | SR90×10 | 2 | 23 |
| | | | | | | | | | | | | | | | | | | | 2308K | 22308EXK | H2308X | | SR90×10 | 1 | 28 |
| 40 | 85 | 60 | 85 | 205 | 60 | 25 | 112 | 31 | 170 | 15 | M12 | 30 | 12 | M10 | M10 | 4.4 | SN509F | SN509FE | 1209K | — | H209X | GS 9 | SR85×6 | 2 | 22 |
| | | | | | | | | | | | | | | | | | | | 2209K | 22209EXK | H309X | | SR85×8 | 1 | 24 |
| | 100 | 70 | 105 | 255 | 70 | 28 | 130 | 46 | 210 | 19 | M16 | 35 | 15 | M12 | M12 | 6.0 | SN609F | SN609FE | 1309K | 21309EK | H309X | GS 9 | SR100×10.5 | 2 | 25 |
| | | | | | | | | | | | | | | | | | | | 2309K | 22309EXK | H2309X | | SR100×10 | 1 | 31 |
| 45 | 90 | 60 | 90 | 205 | 60 | 25 | 115 | 33 | 170 | 15 | M12 | 30 | 12 | M10 | M10 | 4.7 | SN510F | SN510FE | 1210K | — | H210X | GS10 | SR90×6.5 | 2 | 24 |
| | | | | | | | | | | | | | | | | | | | 2210K | 22210EXK | H310X | | SR90×10 | 1 | 25 |
| | 110 | 70 | 115 | 255 | 70 | 30 | 135 | 50 | 210 | 19 | M16 | 35 | 15 | M12 | M12 | 6.5 | SN610F | SN610FE | 1310K | 21310EK | H310X | GS10 | SR110×11.5 | 2 | 27 |
| | | | | | | | | | | | | | | | | | | | 2310K | 22310EXK | H2310X | | SR110×10 | 1 | 34 |
| 50 | 100 | 70 | 95 | 255 | 70 | 28 | 130 | 33 | 210 | 19 | M16 | 35 | 15 | M12 | M12 | 6.3 | SN511F | SN511FE | 1211K | — | H211X | GS11 | SR100×6 | 2 | 25 |
| | | | | | | | | | | | | | | | | | | | 2211K | 22211EXK | H311X | | SR100×8 | 1 | 27 |
| | 120 | 80 | 120 | 275 | 80 | 30 | 150 | 53 | 230 | 19 | M16 | 40 | 15 | M12 | M12 | 8.5 | SN611F | SN611FE | 1311K | 21311EK | H311X | GS11 | SR120×12 | 2 | 29 |
| | | | | | | | | | | | | | | | | | | | 2311K | 22311EXK | H2311X | | SR120×10 | 1 | 36 |
| 55 | 110 | 70 | 105 | 255 | 70 | 30 | 135 | 38 | 210 | 19 | M16 | 35 | 15 | M12 | M12 | 6.9 | SN512F | SN512FE | 1212K | — | H212X | GS12 | SR110×8 | 2 | 26 |
| | | | | | | | | | | | | | | | | | | | 2212K | 22212EXK | H312X | | SR110×10 | 1 | 29 |
| | 130 | 80 | 125 | 280 | 80 | 30 | 155 | 56 | 230 | 19 | M16 | 40 | 15 | M12 | M12 | 9.0 | SN612F | SN612FE | 1312K | 21312EK | H312X | GS12 | SR130×12.5 | 2 | 31 |
| | | | | | | | | | | | | | | | | | | | 2312K | 22312EXK | H2312X | | SR130×10 | 1 | 39 |

Remarks: 1. Plummer block housings are housings with oil seals, a plug and a grease nipple only.
To make a complete unit, please order the corresponding bearing, adapter sleeve and locating rings shown in the table additionally.
2. The masses in the table do not include the bearing, adapter sleeve and locating rings but the bolts.
3. H8, H13 and h13 in the table means tolerance classes specified in JIS B 0401.
4. The tolerance of locating ring O.D. is h12, and 0 ~ -0.2 for the width.
5. When one locating ring is used for fixed-end, the offset (X dimension) of bearing center from the center of the plummer block housing is a half of the locating ring width.
6. The threads for plugs are PT1/8. SN505F does not have a drain hole.
7. ZF type oil seals are also available instead of GS type seals.
8. Please specify number of bolt holes.
9. The dimension Y indicates the distance from the bearing center to the outer side face of the nut.

# Plummer Block Housings

## Flat Bottom Type SN5F, SN6F Series for Bearing with Adapter Sleeve

Shaft Diameter: 60～90mm

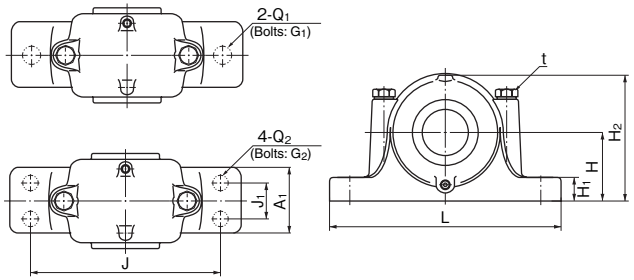


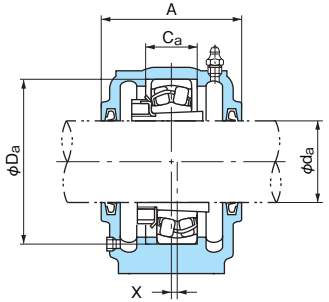


Through Shaft Type

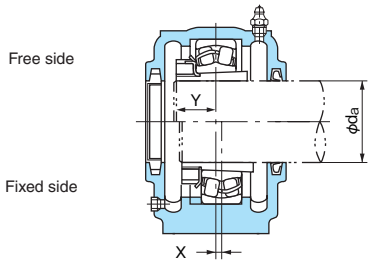


Shaft End Type

| Shaft dia. da (mm) | Dimensions (mm) | | | | | | | | Bolt holes (Reference) | | | | | | t (Nominal) (Reference) | Mass (kg) (Reference) | Designations | | Applicable parts | | | | | | Y (Reference) |
|---|---|---|---|---|---|---|---|---|---|---|---|---|---|---|---|---|---|---|---|---|---|---|---|---|---|
| | Da (H8) | H (h13) | A | L | A1 | H1 | H2 | Ca (H13) | J | Q1 | G1 (Nominal) | J1 | Q2 | G2 (Nominal) | | | Through Shaft Type | Shaft End Type | Self-aligning ball bearings | Spherical roller bearings | Adapter sleeve | Oil seal | Locating ring Designations | Locating ring Q'ty | |
| 60 | 120 | 80 | 110 | 275 | 80 | 30 | 150 | 43 | 230 | 19 | M16 | 40 | 15 | M12 | M12 | 7.0 | SN513F | SN513FE | 1213K | — | H213X | GS13 | SR120×10 | 2 | 28 |
| | | | | | | | | | | | | | | | | | | | 2213K | 22213EXK | H313X | | SR120×12 | 1 | 32 |
| | 140 | 95 | 130 | 315 | 90 | 32 | 175 | 58 | 260 | 24 | M20 | 50 | 19 | M16 | M16 | 13 | SN613F | SN613FE | 1313K | 21313EK | H313X | GS13 | SR140×12.5 | 2 | 33 |
| | | | | | | | | | | | | | | | | | | | 2313K | 22313EXK | H2313X | | SR140×10 | 1 | 40 |
| 65 | 130 | 80 | 115 | 280 | 80 | 30 | 155 | 41 | 230 | 19 | M16 | 40 | 15 | M12 | M12 | 8.8 | SN515F | SN515FE | 1215K | — | H215X | GS15 | SR130×8 | 2 | 30 |
| | | | | | | | | | | | | | | | | | | | 2215K | 22215EXK | H315X | | SR130×10 | 1 | 33 |
| | 160 | 100 | 140 | 345 | 100 | 35 | 195 | 65 | 290 | 24 | M20 | 50 | 19 | M16 | M16 | 16 | SN615F | SN615FE | 1315K | 21315EK | H315X | GS15 | SR160×14 | 2 | 36 |
| | | | | | | | | | | | | | | | | | | | 2315K | 22315EXK | H2315X | | SR160×10 | 1 | 45 |
| 70 | 140 | 95 | 120 | 315 | 90 | 32 | 175 | 43 | 260 | 24 | M20 | 50 | 19 | M16 | M16 | 13 | SN516F | SN516FE | 1216K | — | H216X | GS16 | SR140×8.5 | 2 | 32 |
| | | | | | | | | | | | | | | | | | | | 2216K | 22216EXK | H316X | | SR140×10 | 1 | 36 |
| | 170 | 112 | 145 | 345 | 100 | 35 | 212 | 68 | 290 | 24 | M20 | 50 | 19 | M16 | M16 | 17 | SN616F | SN616FE | 1316K | 21316EK | H316X | GS16 | SR170×14.5 | 2 | 39 |
| | | | | | | | | | | | | | | | | | | | 2316K | 22316EXK | H2316X | | SR170×10 | 1 | 48 |
| 75 | 150 | 95 | 125 | 320 | 90 | 32 | 185 | 46 | 260 | 24 | M20 | 50 | 19 | M16 | M16 | 14 | SN517F | SN517FE | 1217K | — | H217X | GS17 | SR150×9 | 2 | 34 |
| | | | | | | | | | | | | | | | | | | | 2217K | 22217EXK | H317X | | SR150×10 | 1 | 38 |
| | 180 | 112 | 155 | 380 | 110 | 40 | 223 | 70 | 320 | 28 | M24 | 60 | 24 | M20 | M20 | 24 | SN617F | SN617FE | 1317K | 21317EK | H317X | GS17 | SR180×14.5 | 2 | 41 |
| | | | | | | | | | | | | | | | | | | | 2317K | 22317EXK | H2317X | | SR180×10 | 1 | 50 |
| 80 | 160 | 100 | 145 | 345 | 100 | 35 | 195 | 62.4 | 290 | 24 | M20 | 50 | 19 | M16 | M16 | 18 | SN518F | SN518FE | 1218K | — | H218X | GS18 | SR160×16.2 | 2 | 35 |
| | | | | | | | | | | | | | | | | | | | 2218K | 22218EXK | H318X | | SR160×11.2 | 2 | 40 |
| | | | | | | | | | | | | | | | | | | | — | 23218EK | H2318X | | SR160×10 | 1 | 46 |
| | 190 | 112 | 160 | 380 | 110 | 40 | 230 | 74 | 320 | 28 | M24 | 60 | 24 | M20 | M20 | 26 | SN618F | SN618FE | 1318K | 21318EK | H318X | GS18 | SR190×15.5 | 2 | 42 |
| | | | | | | | | | | | | | | | | | | | 2318K | 22318EXK | H2318X | | SR190×10 | 1 | 52 |
| 85 | 170 | 112 | 140 | 345 | 100 | 35 | 210 | 53 | 290 | 24 | M20 | 50 | 19 | M16 | M16 | 20 | SN519F | SN519FE | 1219K | — | H219X | GS19 | SR170×10.5 | 2 | 37 |
| | | | | | | | | | | | | | | | | | | | 2219K | 22219EXK | H319X | | SR170×10 | 1 | 43 |
| | 200 | 125 | 170 | 410 | 120 | 45 | 250 | 77 | 350 | 28 | M24 | 70 | 24 | M20 | M20 | 30 | SN619F | SN619FE | 1319K | 21319EK | H319X | GS19 | SR200×16 | 2 | 44 |
| | | | | | | | | | | | | | | | | | | | 2319K | 22319EXK | H2319X | | SR200×10 | 1 | 55 |
| 90 | 180 | 112 | 160 | 380 | 110 | 40 | 218 | 70.3 | 320 | 28 | M24 | 60 | 24 | M20 | M20 | 26 | SN520F | SN520FE | 1220K | — | H220X | GS20 | SR180×18.1 | 2 | 39 |
| | | | | | | | | | | | | | | | | | | | 2220K | 22220EXK | H320X | | SR180×12.1 | 2 | 45 |
| | | | | | | | | | | | | | | | | | | | — | 23220EK | H2320X | | SR180×10 | 1 | 52 |
| | 215 | 140 | 175 | 410 | 120 | 45 | 270 | 83 | 350 | 28 | M24 | 70 | 24 | M20 | M20 | 35 | SN620F | SN620FE | 1320K | 21320EK | H320X | GS20 | SR215×18 | 2 | 46 |
| | | | | | | | | | | | | | | | | | | | 2320K | 22320EXK | H2320X | | SR215×10 | 1 | 59 |

Remarks: 1. Plummer block housings are housings with oil seals, a plug and a grease nipple only.
To make a complete unit, please order the corresponding bearing, adapter sleeve and locating rings shown in the table additionally.
2. The masses in the table do not include the bearing, adapter sleeve and locating rings but the bolts.
3. H8, H13 and h13 in the table means tolerance classes specified in JIS B 0401.
4. The tolerance of locating ring O.D. is h12, and 0 ~ -0.2 for the width.
5. Plummer block housings SN524F, SN620F and larger are provided with eye bolts.
6. When one locating ring is used for fixed-end, the offset (X dimension) of bearing center from the center of the plummer block housing is a half of the locating ring width.
7. The threads for plugs are PT1/8 for SN519F, SN616F and smaller, and PT1/4 for the others.
8. ZF type oil seals are also available instead of GS type seals.
9. Please specify number of bolt holes.
10. The dimension Y indicates the distance from the bearing center to the outer side face of the nut.

# Plummer Block Housings

## Flat Bottom Type SN5F, SN6F Series for Bearing with Adapter Sleeve

Shaft Diameter: 100～140mm

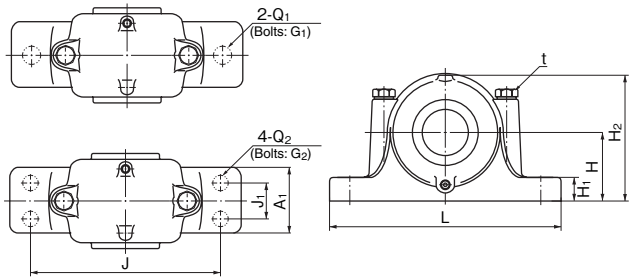


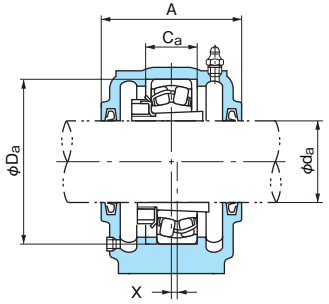


Through Shaft Type

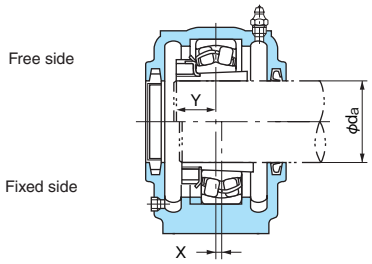


Shaft End Type

| Shaft dia. da (mm) | Dimensions (mm) | | | | | | | | Bolt holes (Reference) | | | | | | t (Nominal) (Reference) | Mass (kg) (Reference) | Designations | | Applicable parts | | | | | | Y (Reference) |
|---|---|---|---|---|---|---|---|---|---|---|---|---|---|---|---|---|---|---|---|---|---|---|---|---|---|
| | Da (H8) | H (h13) | A | L | A1 | H1 | H2 | Ca (H13) | J | Q1 | G1 (Nominal) | J1 | Q2 | G2 (Nominal) | | | Through Shaft Type | Shaft End Type | Self-aligning ball bearings | Spherical roller bearings | Adapter sleeve | Oil seal | Locating ring Designations | Locating ring Q'ty | |
| 100 | 200 | 125 | 175 | 410 | 120 | 45 | 240 | 80 | 350 | 28 | M24 | 70 | 24 | M20 | M20 | 28 | **SN522F** | **SN522FE** | 1222K | — | H222X | GS22 | SR200×21 | 2 | 42 |
| | | | | | | | | | | | | | | | | | | | 2222K | 22222EXK | H322X | | SR200×13.5 | 2 | 50 |
| | | | | | | | | | | | | | | | | | | | — | 23222EK | H2322X | | SR200×10 | 1 | 58 |
| | 240 | 150 | 190 | 450 | 130 | 50 | 300 | 90 | 390 | 28 | M24 | 70 | 28 | M24 | M24 | 45 | **SN622F** | **SN622FE** | 1322K | 21322EK | H322X | GS22 | SR240×20 | 2 | 48 |
| | | | | | | | | | | | | | | | | | | | 2322K | 22322EXK | H2322X | | SR240×10 | 1 | 63 |
| 110 | 215 | 140 | 185 | 410 | 120 | 45 | 270 | 86 | 350 | 28 | M24 | 70 | 24 | M20 | M20 | 35 | **SN524F** | **SN524FE** | — | 22224EXK | H3124X | GS24 | SR215×14 | 2 | 53 |
| | | | | | | | | | | | | | | | | | | | — | 23224EK | H2324X | | SR215×10 | 1 | 62 |
| | 260 | 160 | 200 | 530 | 160 | 60 | 320 | 96 | 450 | 35 | M30 | 90 | 28 | M24 | M24 | 63 | **SN624F** | **SN624FE** | — | 22324EK | H2324X | GS24 | SR260×10 | 1 | 67 |
| 115 | 230 | 150 | 190 | 445 | 130 | 50 | 290 | 90 | 380 | 28 | M24 | 70 | 28 | M24 | M24 | 42 | **SN526F** | **SN526FE** | — | 22226EXK | H3126 | GS26 | SR230×13 | 2 | 57 |
| | | | | | | | | | | | | | | | | | | | — | 23226EK | H2326 | | SR230×10 | 1 | 65 |
| | 280 | 170 | 210 | 550 | 160 | 60 | 340 | 103 | 470 | 35 | M30 | 90 | 28 | M24 | M24 | 74 | **SN626F** | **SN626FE** | — | 22326EK | H2326 | GS26 | SR280×10 | 1 | 72 |
| 125 | 250 | 150 | 205 | 500 | 150 | 50 | 305 | 98 | 420 | 35 | M30 | 80 | 28 | M24 | M24 | 52 | **SN528F** | **SN528FE** | — | 22228EXK | H3128 | GS28 | SR250×15 | 2 | 60 |
| | | | | | | | | | | | | | | | | | | | — | 23228EK | H2328 | | SR250×10 | 1 | 70 |
| | 300 | 180 | 235 | 610 | 170 | 65 | 365 | 112 | 520 | 35 | M30 | 100 | 28 | M24 | M30 | 92 | **SN628F** | **SN628FE** | — | 22328EK | H2328 | GS28 | SR300×10 | 1 | 77 |
| 135 | 270 | 160 | 220 | 530 | 160 | 60 | 325 | 106 | 450 | 35 | M30 | 90 | 28 | M24 | M24 | 61 | **SN530F** | **SN530FE** | — | 22230EK | H3130 | GS30 | SR270×16.5 | 2 | 65 |
| | | | | | | | | | | | | | | | | | | | — | 23230EK | H2330 | | SR270×10 | 1 | 76 |
| | 320 | 190 | 245 | 650 | 180 | 65 | 385 | 118 | 560 | 35 | M30 | 110 | 28 | M24 | M30 | 120 | **SN630F** | **SN630FE** | — | 22330EK | H2330 | GS30 | SR320×10 | 1 | 82 |
| 140 | 290 | 170 | 235 | 550 | 160 | 60 | 345 | 114 | 470 | 35 | M30 | 90 | 28 | M24 | M24 | 68 | **SN532F** | **SN532FE** | — | 22232EK | H3132 | GS32 | SR290×17 | 2 | 71 |
| | | | | | | | | | | | | | | | | | | | — | 23232EK | H2332 | | SR290×10 | 1 | 83 |
| | 340 | 200 | 255 | 680 | 190 | 70 | 405 | 124 | 580 | 42 | M36 | 110 | 35 | M30 | M30 | 140 | **SN632F** | **SN632FE** | — | 22332EK | H2332 | GS32 | SR340×10 | 1 | 88 |

Remarks: 1. Plummer block housings are housings with oil seals, a plug and a grease nipple only.
To make a complete unit, please order the corresponding bearing, adapter sleeve and locating rings shown in the table additionally.
2. The masses in the table do not include the bearing, adapter sleeve and locating rings but the bolts.
3. H8, H13 and h13 in the table means tolerance classes specified in JIS B 0401.
4. The tolerance of locating ring O.D. is h12, and 0 ~ -0.2 for the width.
5. Plummer block housings SN524F, SN620F and larger are provided with eye bolts.
6. When one locating ring is used for fixed-end, the offset (X dimension) of bearing center from the center of the plummer block housing is a half of the locating ring width.
7. The threads for plugs are PT1/4.
8. ZF type oil seals are also available instead of GS type seals.
9. Please specify number of bolt holes.
10. The dimension Y indicates the distance from the bearing center to the outer side face of the nut.

# Plummer Block Housings

## SN2, SN3 Series
## for Bearing with Cylindrical Bore

Shaft Diameter: 25～55mm

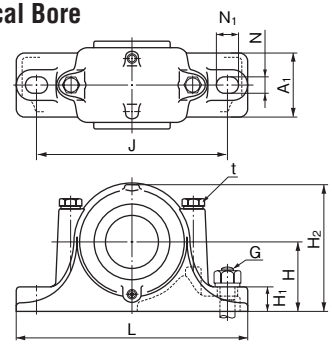


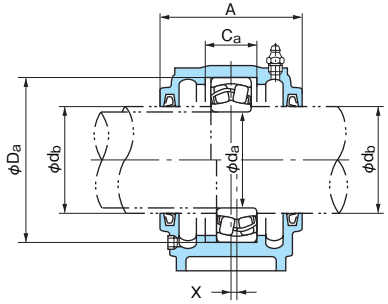


Same Bore Type

Free side

Fixed side

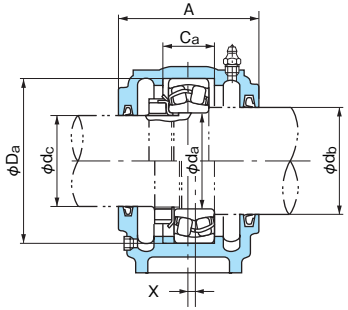


Different Bore Type

| Shaft dia. (mm) | | | Dimensions (mm) | | | | | | | | | | | | | Mass (kg) (Reference) | Designations | | Applicable parts | | | | | | | | Y (Reference) |
|---|---|---|---|---|---|---|---|---|---|---|---|---|---|---|---|---|---|---|---|---|---|---|---|---|---|---|---|
| da | db | dc | Da (H8) | H (h13) | J | N | N1 | A | L | A1 | H1 | H2 | Ca (H13) | G (Nominal) | t (Nominal) (Reference) | | Same Bore Type | Different Bore Type | Self-aligning ball bearings | Spherical roller bearings | Nut | Locking washer | Oil seal db side | Oil seal dc side | Locating ring Designations | Locating ring Q'ty | |
| 25 | 30(1) | 20 | 52 | 40 | 130 | 15 | 20 | 67 | 165 | 46 | 22 | 75 | 25 | M12 | M 8 | 1.1 | SN205 | SN205C | 1205 | — | AN05 | AW05X | GS 7 | GS 5 | SR52×5 | 2 | 17 |
| | | | | | | | | | | | | | | | | | | | 2205 | 22205EX | | | | | SR52×7 | 1 | 19 |
| | | | 62 | 50 | 150 | 15 | 20 | 80 | 185 | 52 | 22 | 90 | 34 | M12 | M 8 | 1.6 | SN305 | SN305C | 1305 | 21305E | AN05 | AW05X | GS 7 | GS 5 | SR62×8.5 | 2 | 18 |
| | | | | | | | | | | | | | | | | | | | 2305 | — | | | | | SR62×10 | 1 | 22 |
| 30 | 35(1) | 25 | 62 | 50 | 150 | 15 | 20 | 77 | 185 | 52 | 22 | 90 | 30 | M12 | M 8 | 1.7 | SN206 | SN206C | 1206 | — | AN06 | AW06X | GS 8 | GS 6 | SR62×7 | 2 | 18 |
| | | | | | | | | | | | | | | | | | | | 2206 | 22206EX | | | | | SR62×10 | 1 | 20 |
| | | | 72 | 50 | 150 | 15 | 20 | 82 | 185 | 52 | 22 | 95 | 37 | M12 | M10 | 1.8 | SN306 | SN306C | 1306 | 21306E | AN06 | AW06X | GS 8 | GS 6 | SR72×9 | 2 | 19 |
| | | | | | | | | | | | | | | | | | | | 2306 | — | | | | | SR72×10 | 1 | 23 |
| 35 | 45 | 30 | 72 | 50 | 150 | 15 | 20 | 82 | 185 | 52 | 22 | 95 | 33 | M12 | M10 | 1.9 | SN207 | SN207C | 1207 | — | AN07 | AW07X | GS10 | GS 7 | SR72×8 | 2 | 19 |
| | | | | | | | | | | | | | | | | | | | 2207 | 22207EX | | | | | SR72×10 | 1 | 22 |
| | | | 80 | 60 | 170 | 15 | 20 | 90 | 205 | 60 | 25 | 110 | 41 | M12 | M10 | 2.6 | SN307 | SN307C | 1307 | 21307E | AN07 | AW07X | GS10 | GS 7 | SR80×10 | 2 | 21 |
| | | | | | | | | | | | | | | | | | | | 2307 | — | | | | | SR80×10 | 1 | 26 |
| 40 | 50 | 35 | 80 | 60 | 170 | 15 | 20 | 85 | 205 | 60 | 25 | 110 | 33 | M12 | M10 | 2.6 | SN208 | SN208C | 1208 | — | AN08 | AW08X | GS11 | GS 8 | SR80×7.5 | 2 | 21 |
| | | | | | | | | | | | | | | | | | | | 2208 | 22208EX | | | | | SR80×10 | 1 | 23 |
| | | | 90 | 60 | 170 | 15 | 20 | 95 | 205 | 60 | 25 | 115 | 43 | M12 | M10 | 2.9 | SN308 | SN308C | 1308 | 21308E | AN08 | AW08X | GS11 | GS 8 | SR90×10 | 2 | 23 |
| | | | | | | | | | | | | | | | | | | | 2308 | 22308EX | | | | | SR90×10 | 1 | 28 |
| 45 | 55 | 40 | 85 | 60 | 170 | 15 | 20 | 85 | 205 | 60 | 25 | 112 | 31 | M12 | M10 | 2.8 | SN209 | SN209C | 1209 | — | AN09 | AW09X | GS12 | GS 9 | SR85×6 | 2 | 22 |
| | | | | | | | | | | | | | | | | | | | 2209 | 22209EX | | | | | SR85×8 | 1 | 24 |
| | | | 100 | 70 | 210 | 18 | 23 | 105 | 255 | 70 | 28 | 130 | 46 | M16 | M12 | 4.1 | SN309 | SN309C | 1309 | 21309E | AN09 | AW09X | GS12 | GS 9 | SR100×10.5 | 2 | 25 |
| | | | | | | | | | | | | | | | | | | | 2309 | 22309EX | | | | | SR100×10 | 1 | 31 |
| 50 | 60 | 45 | 90 | 60 | 170 | 15 | 20 | 90 | 205 | 60 | 25 | 115 | 33 | M12 | M10 | 3.0 | SN210 | SN210C | 1210 | — | AN10 | AW10X | GS13 | GS10 | SR90×6.5 | 2 | 24 |
| | | | | | | | | | | | | | | | | | | | 2210 | 22210EX | | | | | SR90×10 | 1 | 25 |
| | | | 110 | 70 | 210 | 18 | 23 | 115 | 255 | 70 | 30 | 135 | 50 | M16 | M12 | 4.7 | SN310 | SN310C | 1310 | 21310E | AN10 | AW10X | GS13 | GS10 | SR110×11.5 | 2 | 27 |
| | | | | | | | | | | | | | | | | | | | 2310 | 22310EX | | | | | SR110×10 | 1 | 34 |
| 55 | 65 | 50 | 100 | 70 | 210 | 18 | 23 | 95 | 255 | 70 | 28 | 130 | 33 | M16 | M12 | 4.5 | SN211 | SN211C | 1211 | — | AN11 | AW11X | GS15 | GS11 | SR100×6 | 2 | 25 |
| | | | | | | | | | | | | | | | | | | | 2211 | 22211EX | | | | | SR100×8 | 1 | 27 |
| | | | 120 | 80 | 230 | 18 | 23 | 120 | 275 | 80 | 30 | 150 | 53 | M16 | M12 | 5.8 | SN311 | SN311C | 1311 | 21311E | AN11 | AW11X | GS15 | GS11 | SR120×12 | 2 | 29 |
| | | | | | | | | | | | | | | | | | | | 2311 | 22311EX | | | | | SR120×10 | 1 | 36 |

Note: (1) When heavy axial load is applied, a spacer with large O.D. and small inner chamfer must be used between the bearing and shaft shoulder to obtain a sufficient contact area.

Remarks: 1. Plummer block housings are housings with oil seals, a plug and a grease nipple only.
To make a complete unit, please order the corresponding bearing, adapter sleeve and locating rings shown in the table additionally.
2. The masses in the table do not include the bearing, nut and locating rings but the bolts.
3. H8, H13 and h13 in the table means tolerance classes specified in JIS B 0401.
4. The tolerance of locating ring O.D. is h12, and 0 ~ -0.2 for the width.
5. The threads for plugs are PT1/8. SN205 does not have a drain holes.
6. When one locating ring is used for fixed-end, the offset (X dimension) of bearing center from the center of the plummer block housing is a half of the locating ring width.
7. ZF type oil seals are also available instead of GS type seals.
8. SNxxxC type housings for shaft diameters different from the dimensions db or dc shown in the table can be custom ordered.
9. The dimension Y indicates the distance from the bearing center to the outer side face of the nut.

# Plummer Block Housings

## SN2, SN3 Series
## for Bearing with Cylindrical Bore

Shaft Diameter: 60～95mm

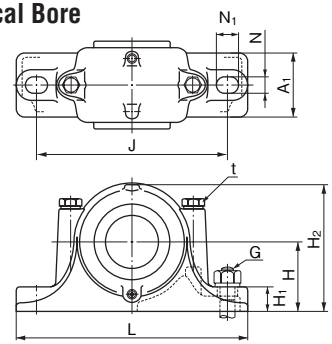


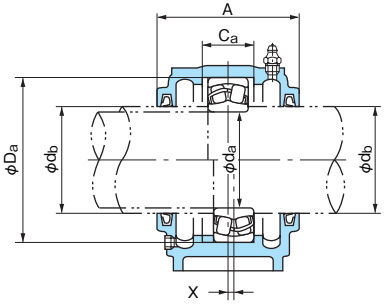


Same Bore Type

Free side

Fixed side

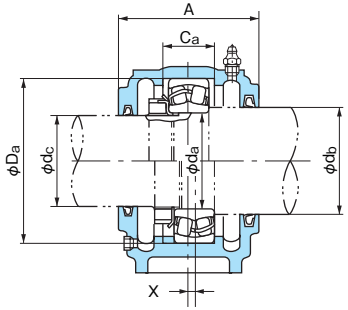


Different Bore Type

| Shaft dia. (mm) | | | Dimensions (mm) | | | | | | | | | | | | | Mass (kg) (Reference) | Designations | | Applicable parts | | | | | | | | Y (Reference) |
|---|---|---|---|---|---|---|---|---|---|---|---|---|---|---|---|---|---|---|---|---|---|---|---|---|---|---|---|
| da | db | dc | Da (H8) | H (h13) | J | N | N1 | A | L | A1 | H1 | H2 | Ca (H13) | G (Nominal) | t (Nominal) (Reference) | | Same Bore Type | Different Bore Type | Self-aligning ball bearings | Spherical roller bearings | Nut | Locking washer | Oil seal db side | Oil seal dc side | Locating ring Designations | Locating ring Q'ty | |
| 60 | 70 | 55 | 110 | 70 | 210 | 18 | 23 | 105 | 255 | 70 | 30 | 135 | 38 | M16 | M12 | 5.0 | SN212 | SN212C | 1212 | — | AN12 | AW12X | GS16 | GS12 | SR110×8 | 2 | 26 |
| | | | | | | | | | | | | | | | | | | | 2212 | 22212EX | | | | | SR110×10 | 1 | 29 |
| | 70(1) | 55 | 130 | 80 | 230 | 18 | 23 | 125 | 280 | 80 | 30 | 155 | 56 | M16 | M12 | 6.5 | SN312 | SN312C | 1312 | 21312E | AN12 | AW12X | GS16 | GS12 | SR130×12.5 | 2 | 31 |
| | | | | | | | | | | | | | | | | | | | 2312 | 22312EX | | | | | SR130×10 | 1 | 39 |
| 65 | 75 | 60 | 120 | 80 | 230 | 18 | 23 | 110 | 275 | 80 | 30 | 150 | 43 | M16 | M12 | 5.6 | SN213 | SN213C | 1213 | — | AN13 | AW13X | GS17 | GS13 | SR120×10 | 2 | 28 |
| | | | | | | | | | | | | | | | | | | | 2213 | 22213EX | | | | | SR120×12 | 1 | 32 |
| | 75(1) | 60 | 140 | 95 | 260 | 22 | 27 | 130 | 315 | 90 | 32 | 175 | 58 | M20 | M16 | 8.7 | SN313 | SN313C | 1313 | 21313E | AN13 | AW13X | GS17 | GS13 | SR140×12.5 | 2 | 33 |
| | | | | | | | | | | | | | | | | | | | 2313 | 22313EX | | | | | SR140×10 | 1 | 40 |
| 70 | 80 | 65 | 125 | 80 | 230 | 18 | 23 | 115 | 275 | 80 | 30 | 155 | 44 | M16 | M12 | 6.2 | SN214 | SN214C | 1214 | — | AN14 | AW14X | GS18 | GS15 | SR125×10 | 2 | 28 |
| | | | | | | | | | | | | | | | | | | | 2214 | 22214EX | | | | | SR125×13 | 1 | 32 |
| | 80(1) | 65 | 150 | 95 | 260 | 22 | 27 | 130 | 320 | 90 | 32 | 185 | 61 | M20 | M16 | 10 | SN314 | SN314C | 1314 | 21314E | AN14 | AW14X | GS18 | GS15 | SR150×13 | 2 | 34 |
| | | | | | | | | | | | | | | | | | | | 2314 | 22314EX | | | | | SR150×10 | 1 | 42 |
| 75 | 85 | 70 | 130 | 80 | 230 | 18 | 23 | 115 | 280 | 80 | 30 | 155 | 41 | M16 | M12 | 7.0 | SN215 | SN215C | 1215 | — | AN15 | AW15X | GS19 | GS16 | SR130×8 | 2 | 30 |
| | | | | | | | | | | | | | | | | | | | 2215 | 22215EX | | | | | SR130×10 | 1 | 33 |
| | 85(1) | 70 | 160 | 100 | 290 | 22 | 27 | 140 | 345 | 100 | 35 | 195 | 65 | M20 | M16 | 11 | SN315 | SN315C | 1315 | 21315E | AN15 | AW15X | GS19 | GS16 | SR160×14 | 2 | 36 |
| | | | | | | | | | | | | | | | | | | | 2315 | 22315EX | | | | | SR160×10 | 1 | 45 |
| 80 | 90 | 75 | 140 | 95 | 260 | 22 | 27 | 120 | 315 | 90 | 32 | 175 | 43 | M20 | M16 | 9.0 | SN216 | SN216C | 1216 | — | AN16 | AW16X | GS20 | GS17 | SR140×8.5 | 2 | 32 |
| | | | | | | | | | | | | | | | | | | | 2216 | 22216EX | | | | | SR140×10 | 1 | 36 |
| | 90(1) | 75 | 170 | 112 | 290 | 22 | 27 | 145 | 345 | 100 | 35 | 212 | 68 | M20 | M16 | 13 | SN316 | SN316C | 1316 | 21316E | AN16 | AW16X | GS20 | GS17 | SR170×14.5 | 2 | 39 |
| | | | | | | | | | | | | | | | | | | | 2316 | 22316EX | | | | | SR170×10 | 1 | 48 |
| 85 | 95 | 80 | 150 | 95 | 260 | 22 | 27 | 125 | 320 | 90 | 32 | 185 | 46 | M20 | M16 | 10 | SN217 | SN217C | 1217 | — | AN17 | AW17X | GS21 | GS18 | SR150×9 | 2 | 34 |
| | | | | | | | | | | | | | | | | | | | 2217 | 22217EX | | | | | SR150×10 | 1 | 38 |
| | 95(1) | 80 | 180 | 112 | 320 | 26 | 32 | 155 | 380 | 110 | 40 | 223 | 70 | M24 | M20 | 15 | SN317 | SN317C | 1317 | 21317E | AN17 | AW17X | GS21 | GS18 | SR180×14.5 | 2 | 41 |
| | | | | | | | | | | | | | | | | | | | 2317 | 22317EX | | | | | SR180×10 | 1 | 50 |
| 90 | 100 | 85 | 160 | 100 | 290 | 22 | 27 | 145 | 345 | 100 | 35 | 195 | 62.4 | M20 | M16 | 13 | SN218 | SN218C | 1218 | — | AN18 | AW18X | GS22 | GS19 | SR160×16.2 | 2 | 35 |
| | | | | | | | | | | | | | | | | | | | 2218 | 22218EX | | | | | SR160×11.2 | 2 | 40 |
| | | | | | | | | | | | | | | | | | | | — | 23218E | | | | | SR160×10 | 1 | 46 |
| 95 | 110 | 90 | 170 | 112 | 290 | 22 | 27 | 140 | 345 | 100 | 35 | 210 | 53 | M20 | M16 | 15 | SN219 | SN219C | 1219 | — | AN19 | AW19X | GS24 | GS20 | SR170×10.5 | 2 | 37 |
| | | | | | | | | | | | | | | | | | | | 2219 | 22219EX | | | | | SR170×10 | 1 | 43 |

Note: (1) When heavy axial load is applied, a spacer with large O.D. and small inner chamfer must be used between the bearing and shaft shoulder to obtain a sufficient contact area.

Remarks: 1. Plummer block housings are housings with oil seals, a plug and a grease nipple only.
To make a complete unit, please order the corresponding bearing, adapter sleeve and locating rings shown in the table additionally.
2. The masses in the table do not include the bearing, nut and locating rings but the bolts.
3. H8, H13 and h13 in the table means tolerance classes specified in JIS B 0401.
4. The tolerance of locating ring O.D. is h12, and 0 ~ -0.2 for the width.
5. Plummer block housings SN224 and larger are provided with eye bolts.
6. The threads for plugs are PT1/8 for SN316F and smaller, and PT1/4 for the others.
7. When one locating ring is used for fixed-end, the offset (X dimension) of bearing center from the center of the plummer block housing is a half of the locating ring width.
8. ZF type oil seals are also available instead of GS type seals.
9. SNxxxC type housings for different shaft diameters db or dc from the dimensions shown above are also available.
10. The dimension Y indicates the distance from the bearing center to the outer side face of the nut.

# Plummer Block Housings

## SN2, SN3 Series
## for Bearing with Cylindrical Bore

Shaft Diameter: 100～160mm

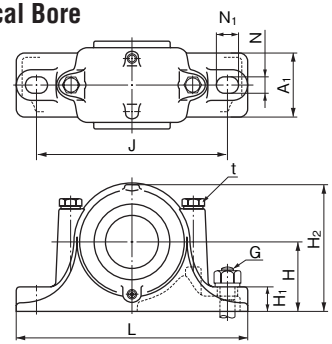


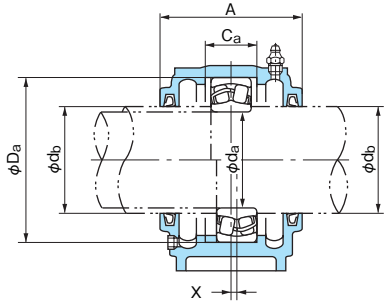


Same Bore Type

Free side

Fixed side

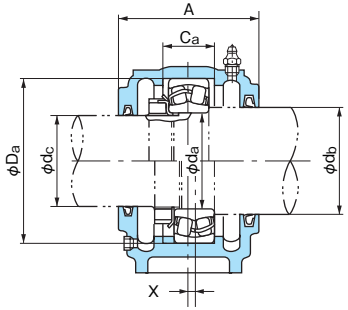


Different Bore Type

| Shaft dia. (mm) | | | Dimensions (mm) | | | | | | | | | | | | | Mass (kg) (Reference) | Designations | | Applicable parts | | | | | | | | Y (Reference) |
|---|---|---|---|---|---|---|---|---|---|---|---|---|---|---|---|---|---|---|---|---|---|---|---|---|---|---|---|
| da | db | dc | Da (H8) | H (h13) | J | N | N1 | A | L | A1 | H1 | H2 | Ca (H13) | G (Nominal) | t (Nominal) (Reference) | | Same Bore Type | Different Bore Type | Self-aligning ball bearings | Spherical roller bearings | Nut | Locking washer | Oil seal db side | Oil seal dc side | Locating ring Designations | Locating ring Q'ty | |
| 100 | 115 | 95 | 180 | 112 | 320 | 26 | 32 | 160 | 380 | 110 | 40 | 218 | 70.3 | M24 | M20 | 19 | **SN220** | **SN220C** | 1220 | — | AN20 | AW20X | GS26 | GS21 | SR180×18.1 | 2 | 39 |
| | | | | | | | | | | | | | | | | | | | 2220 | 22220EX | | | | | SR180×12.1 | 2 | 45 |
| | | | | | | | | | | | | | | | | | | | — | 23220E | | | | | SR180×10 | 1 | 52 |
| 110 | 125 | 105 | 200 | 125 | 350 | 26 | 32 | 175 | 410 | 120 | 45 | 240 | 80 | M24 | M20 | 20 | **SN222** | **SN222C** | 1222 | — | AN22 | AW22X | GS28 | GS23 | SR200×21 | 2 | 42 |
| | | | | | | | | | | | | | | | | | | | 2222 | 22222EX | | | | | SR200×13.5 | 2 | 50 |
| | | | | | | | | | | | | | | | | | | | — | 23222E | | | | | SR200×10 | 1 | 58 |
| 120 | 135 | 115 | 215 | 140 | 350 | 26 | 32 | 185 | 410 | 120 | 45 | 270 | 86 | M24 | M20 | 25 | **SN224** | **SN224C** | — | 22224EX | AN24 | AW24X | GS30 | GS26 | SR215×14 | 2 | 53 |
| | | | | | | | | | | | | | | | | | | | — | 23224E | | | | | SR215×10 | 1 | 62 |
| 130 | 145 | 125 | 230 | 150 | 380 | 28 | 36 | 190 | 445 | 130 | 50 | 290 | 90 | M24 | M24 | 30 | **SN226** | **SN226C** | — | 22226EX | AN26 | AW26 | GS33 | GS28 | SR230×13 | 2 | 57 |
| | | | | | | | | | | | | | | | | | | | — | 23226E | | | | | SR230×10 | 1 | 65 |
| 140 | 155 | 135 | 250 | 150 | 420 | 33 | 42 | 205 | 500 | 150 | 50 | 305 | 98 | M30 | M24 | 38 | **SN228** | **SN228C** | — | 22228EX | AN28 | AW28 | GS35 | GS30 | SR250×15 | 2 | 60 |
| | | | | | | | | | | | | | | | | | | | — | 23228E | | | | | SR250×10 | 1 | 70 |
| 150 | 165 | 145 | 270 | 160 | 450 | 33 | 42 | 220 | 530 | 160 | 60 | 325 | 106 | M30 | M24 | 46 | **SN230** | **SN230C** | — | 22230E | AN30 | AW30 | GS37 | GS33 | SR270×16.5 | 2 | 65 |
| | | | | | | | | | | | | | | | | | | | — | 23230E | | | | | SR270×10 | 1 | 76 |
| 160 | 175 | 150 | 290 | 170 | 470 | 33 | 42 | 235 | 550 | 160 | 60 | 345 | 114 | M30 | M24 | 50 | **SN232** | **SN232C** | — | 22232E | AN32 | AW32 | GS39 | GS34 | SR290×17 | 2 | 71 |
| | | | | | | | | | | | | | | | | | | | — | 23232E | | | | | SR290×10 | 1 | 83 |

Remarks: 1. Plummer block housings are housings with oil seals, a plug and a grease nipple only.
To make a complete unit, please order the corresponding bearing, adapter sleeve and locating rings shown in the table additionally.
2. The masses in the table do not include the bearing, nut and locating rings but the bolts.
3. H8, H13 and h13 in the table means tolerance classes specified in JIS B 0401.
4. The tolerance of locating ring O.D. is h12, and 0 ~ -0.2 for the width.
5. Plummer block housings SN224 and larger are provided with eye bolts.
6. The threads for plugs are PT1/8 for SN316F and smaller, and PT1/4 for the others.
7. When one locating ring is used for fixed-end, the offset (X dimension) of bearing center from the center of the plummer block housing is a half of the locating ring width.
8. ZF type oil seals are also available instead of GS type seals.
9. SNxxxC type housings for different shaft diameters db or dc from the dimensions shown above are also available.
10. The dimension Y indicates the distance from the bearing center to the outer side face of the nut.

# Plummer Block Housings

## Flat Bottom Type SN2F, SN3F Series for Bearing with Cylindrical Bore

Shaft Diameter: 25～55mm

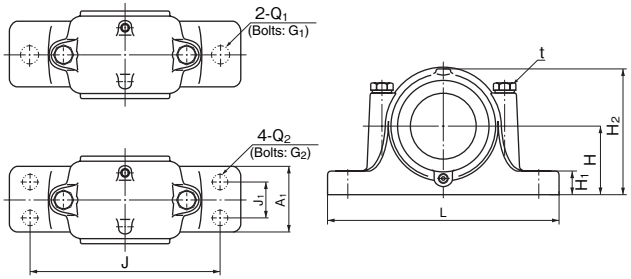


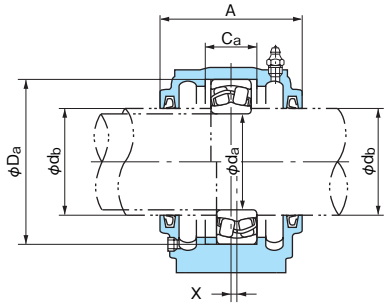


Same Bore Type

Free side

Fixed side

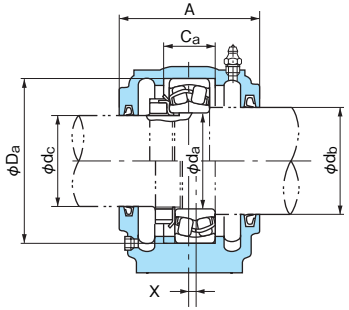


Different Bore Type

| Shaft dia. (mm) | | | Dimensions (mm) | | | | | | | | Bolt holes (Reference) | | | | | | t (Nominal) (Reference) | Mass (kg) (Reference) | Designations | | Applicable parts | | | | | | | | Y (Reference) |
|---|---|---|---|---|---|---|---|---|---|---|---|---|---|---|---|---|---|---|---|---|---|---|---|---|---|---|---|---|---|
| da | db | dc | Da (H8) | H (h13) | A | L | A1 | H1 | H2 | Ca (H13) | J | Q1 | G1 (Nominal) | J1 | Q2 | G2 (Nominal) | | | Same Bore Type | Different Bore Type | Self-aligning ball bearings | Spherical roller bearings | Nut | Locking washer | Oil seal db side | Oil seal dc side | Locating ring Designations | Locating ring Q'ty | |
| 25 | 30(1) | 20 | 52 | 40 | 67 | 165 | 46 | 22 | 75 | 25 | 130 | 15 | M12 | 25 | 10 | M 8 | M 8 | 1.7 | SN205F | SN205FC | 1205 | — | AN05 | AW05X | GS 7 | GS 5 | SR52×5 | 2 | 17 |
| | | | | | | | | | | | | | | | | | | | | | 2205 | 22205EX | | | | | SR52×7 | 1 | 19 |
| | | | 62 | 50 | 80 | 185 | 52 | 22 | 90 | 34 | 150 | 15 | M12 | 25 | 12 | M10 | M 8 | 2.4 | SN305F | SN305FC | 1305 | 21305E | AN05 | AW05X | GS 7 | GS 5 | SR62×8.5 | 2 | 18 |
| | | | | | | | | | | | | | | | | | | | | | 2305 | — | | | | | SR62×10 | 1 | 22 |
| 30 | 35(1) | 25 | 62 | 50 | 77 | 185 | 52 | 22 | 90 | 30 | 150 | 15 | M12 | 25 | 12 | M10 | M 8 | 2.5 | SN206F | SN206FC | 1206 | — | AN06 | AW06X | GS 8 | GS 6 | SR62×7 | 2 | 18 |
| | | | | | | | | | | | | | | | | | | | | | 2206 | 22206EX | | | | | SR62×10 | 1 | 20 |
| | | | 72 | 50 | 82 | 185 | 52 | 22 | 95 | 37 | 150 | 15 | M12 | 25 | 12 | M10 | M10 | 2.5 | SN306F | SN306FC | 1306 | 21306E | AN06 | AW06X | GS 8 | GS 6 | SR72×9 | 2 | 19 |
| | | | | | | | | | | | | | | | | | | | | | 2306 | — | | | | | SR72×10 | 1 | 23 |
| 35 | 45 | 30 | 72 | 50 | 82 | 185 | 52 | 22 | 95 | 33 | 150 | 15 | M12 | 25 | 12 | M10 | M10 | 2.6 | SN207F | SN207FC | 1207 | — | AN07 | AW07X | GS10 | GS 7 | SR72×8 | 2 | 19 |
| | | | | | | | | | | | | | | | | | | | | | 2207 | 22207EX | | | | | SR72×10 | 1 | 22 |
| | | | 80 | 60 | 90 | 205 | 60 | 25 | 110 | 41 | 170 | 15 | M12 | 30 | 12 | M10 | M10 | 3.8 | SN307F | SN307FC | 1307 | 21307E | AN07 | AW07X | GS10 | GS 7 | SR80×10 | 2 | 21 |
| | | | | | | | | | | | | | | | | | | | | | 2307 | — | | | | | SR80×10 | 1 | 26 |
| 40 | 50 | 35 | 80 | 60 | 85 | 205 | 60 | 25 | 110 | 33 | 170 | 15 | M12 | 30 | 12 | M10 | M10 | 4.0 | SN208F | SN208FC | 1208 | — | AN08 | AW08X | GS11 | GS 8 | SR80×7.5 | 2 | 21 |
| | | | | | | | | | | | | | | | | | | | | | 2208 | 22208EX | | | | | SR80×10 | 1 | 23 |
| | | | 90 | 60 | 95 | 205 | 60 | 25 | 115 | 43 | 170 | 15 | M12 | 30 | 12 | M10 | M10 | 4.0 | SN308F | SN308FC | 1308 | 21308E | AN08 | AW08X | GS11 | GS 8 | SR90×10 | 2 | 23 |
| | | | | | | | | | | | | | | | | | | | | | 2308 | 22308EX | | | | | SR90×10 | 1 | 28 |
| 45 | 55 | 40 | 85 | 60 | 85 | 205 | 60 | 25 | 112 | 31 | 170 | 15 | M12 | 30 | 12 | M10 | M10 | 4.4 | SN209F | SN209FC | 1209 | — | AN09 | AW09X | GS12 | GS 9 | SR85×6 | 2 | 22 |
| | | | | | | | | | | | | | | | | | | | | | 2209 | 22209EX | | | | | SR85×8 | 1 | 24 |
| | | | 100 | 70 | 105 | 255 | 70 | 28 | 130 | 46 | 210 | 19 | M16 | 35 | 15 | M12 | M12 | 6.0 | SN309F | SN309FC | 1309 | 21309E | AN09 | AW09X | GS12 | GS 9 | SR100×10.5 | 2 | 25 |
| | | | | | | | | | | | | | | | | | | | | | 2309 | 22309EX | | | | | SR100×10 | 1 | 31 |
| 50 | 60 | 45 | 90 | 60 | 90 | 205 | 60 | 25 | 115 | 33 | 170 | 15 | M12 | 30 | 12 | M10 | M10 | 4.7 | SN210F | SN210FC | 1210 | — | AN10 | AW10X | GS13 | GS10 | SR90×6.5 | 2 | 24 |
| | | | | | | | | | | | | | | | | | | | | | 2210 | 22210EX | | | | | SR90×10 | 1 | 25 |
| | | | 110 | 70 | 115 | 255 | 70 | 30 | 135 | 50 | 210 | 19 | M16 | 35 | 15 | M12 | M12 | 6.5 | SN310F | SN310FC | 1310 | 21310E | AN10 | AW10X | GS13 | GS10 | SR110×11.5 | 2 | 27 |
| | | | | | | | | | | | | | | | | | | | | | 2310 | 22310EX | | | | | SR110×10 | 1 | 34 |
| 55 | 65 | 50 | 100 | 70 | 95 | 255 | 70 | 28 | 130 | 33 | 210 | 19 | M16 | 35 | 15 | M12 | M12 | 6.3 | SN211F | SN211FC | 1211 | — | AN11 | AW11X | GS15 | GS11 | SR100×6 | 2 | 25 |
| | | | | | | | | | | | | | | | | | | | | | 2211 | 22211EX | | | | | SR100×8 | 1 | 27 |
| | | | 120 | 80 | 120 | 275 | 80 | 30 | 150 | 53 | 230 | 19 | M16 | 40 | 15 | M12 | M12 | 8.5 | SN311F | SN311FC | 1311 | 21311E | AN11 | AW11X | GS15 | GS11 | SR120×12 | 2 | 29 |
| | | | | | | | | | | | | | | | | | | | | | 2311 | 22311EX | | | | | SR120×10 | 1 | 36 |

Note: (1) When heavy axial load is applied, a spacer with large O.D. and small inner chamfer must be used between the bearing and shaft shoulder to obtain a sufficient contact area.

Remarks: 1. Plummer block housings are housings with oil seals, a plug and a grease nipple only.
To make a complete unit, please order the corresponding bearing, adapter sleeve and locating rings shown in the table additionally.
2. The masses in the table do not include the bearing, nut and locating rings but the bolts.
3. H8, H13 and h13 in the table means tolerance classes specified in JIS B 0401.
4. The tolerance of locating ring O.D. is h12, and 0 ~ -0.2 for the width.
5. The threads for plugs are PT1/8. SN205 does not have a drain holes.
6. When one locating ring is used for fixed-end, the offset (X dimension) of bearing center from the center of the plummer block housing is a half of the locating ring width.
7. ZF type oil seals are also available instead of GS type seals.
8. SNxxxC type housings for shaft diameters different from the dimensions db or dc shown in the table can be custom ordered.
9. Please specify number of bolt holes.
10. The dimension Y indicates the distance from the bearing center to the outer side face of the nut.

# Plummer Block Housings

## Flat Bottom Type SN2F, SN3F Series for Bearing with Cylindrical Bore

Shaft Diameter: 60～95mm

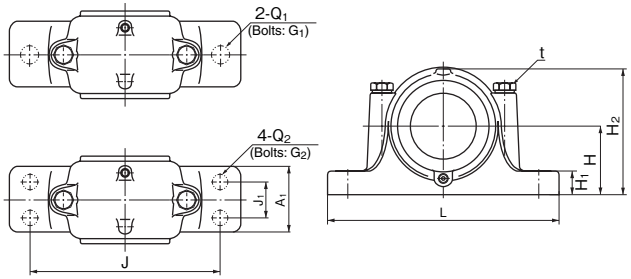


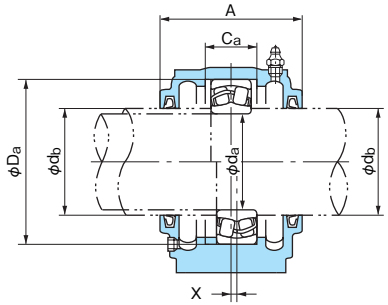


Same Bore Type

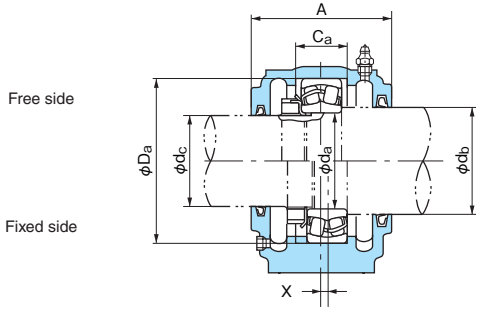


Different Bore Type

| Shaft dia. (mm) | | | Dimensions (mm) | | | | | | | | Bolt holes (Reference) | | | | | | t (Nominal) (Reference) | Mass (kg) (Reference) | Designations | | Applicable parts | | | | | | | | Y (Reference) |
|---|---|---|---|---|---|---|---|---|---|---|---|---|---|---|---|---|---|---|---|---|---|---|---|---|---|---|---|---|---|
| da | db | dc | Da (H8) | H (h13) | A | L | A1 | H1 | H2 | Ca (H13) | J | Q1 | G1 (Nominal) | J1 | Q2 | G2 (Nominal) | | | Same Bore Type | Different Bore Type | Self-aligning ball bearings | Spherical roller bearings | Nut | Locking washer | Oil seal db side | Oil seal dc side | Locating ring Designations | Locating ring Q'ty | |
| 60 | 70 | 55 | 110 | 70 | 105 | 255 | 70 | 30 | 135 | 38 | 210 | 19 | M16 | 35 | 15 | M12 | M12 | 6.9 | SN212F | SN212FC | 1212 | — | AN12 | AW12X | GS16 | GS12 | SR110×8 | 2 | 26 |
| | | | | | | | | | | | | | | | | | | | | | 2212 | 22212EX | | | | | SR110×10 | 1 | 29 |
| | 70(1) | 55 | 130 | 80 | 125 | 280 | 80 | 30 | 155 | 56 | 230 | 19 | M16 | 40 | 15 | M12 | M12 | 9.0 | SN312F | SN312FC | 1312 | 21312E | AN12 | AW12X | GS16 | GS12 | SR130×12.5 | 2 | 31 |
| | | | | | | | | | | | | | | | | | | | | | 2312 | 22312EX | | | | | SR130×10 | 1 | 39 |
| 65 | 75 | 60 | 120 | 80 | 110 | 275 | 80 | 30 | 150 | 43 | 230 | 19 | M16 | 40 | 15 | M12 | M12 | 7.0 | SN213F | SN213FC | 1213 | — | AN13 | AW13X | GS17 | GS13 | SR120×10 | 2 | 28 |
| | | | | | | | | | | | | | | | | | | | | | 2213 | 22213EX | | | | | SR120×12 | 1 | 32 |
| | 75(1) | 60 | 140 | 95 | 130 | 315 | 90 | 32 | 175 | 58 | 260 | 24 | M20 | 50 | 19 | M16 | M16 | 13 | SN313F | SN313FC | 1313 | 21313E | AN13 | AW13X | GS17 | GS13 | SR140×12.5 | 2 | 33 |
| | | | | | | | | | | | | | | | | | | | | | 2313 | 22313EX | | | | | SR140×10 | 1 | 40 |
| 70 | 80 | 65 | 125 | 80 | 115 | 275 | 80 | 30 | 155 | 44 | 230 | 19 | M16 | 40 | 15 | M12 | M12 | 7.6 | SN214F | SN214FC | 1214 | — | AN14 | AW14X | GS18 | GS15 | SR125×10 | 2 | 28 |
| | | | | | | | | | | | | | | | | | | | | | 2214 | 22214EX | | | | | SR125×13 | 1 | 32 |
| | 80(1) | 65 | 150 | 95 | 130 | 320 | 90 | 32 | 185 | 61 | 260 | 24 | M20 | 50 | 19 | M16 | M16 | 15 | SN314F | SN314FC | 1314 | 21314E | AN14 | AW14X | GS18 | GS15 | SR150×13 | 2 | 34 |
| | | | | | | | | | | | | | | | | | | | | | 2314 | 22314EX | | | | | SR150×10 | 1 | 42 |
| 75 | 85 | 70 | 130 | 80 | 115 | 280 | 80 | 30 | 155 | 41 | 230 | 19 | M16 | 40 | 15 | M12 | M12 | 8.8 | SN215F | SN215FC | 1215 | — | AN15 | AW15X | GS19 | GS16 | SR130×8 | 2 | 30 |
| | | | | | | | | | | | | | | | | | | | | | 2215 | 22215EX | | | | | SR130×10 | 1 | 33 |
| | 85(1) | 70 | 160 | 100 | 140 | 345 | 100 | 35 | 195 | 65 | 290 | 24 | M20 | 50 | 19 | M16 | M16 | 16 | SN315F | SN315FC | 1315 | 21315E | AN15 | AW15X | GS19 | GS16 | SR160×14 | 2 | 36 |
| | | | | | | | | | | | | | | | | | | | | | 2315 | 22315EX | | | | | SR160×10 | 1 | 45 |
| 80 | 90 | 75 | 140 | 95 | 120 | 315 | 90 | 32 | 175 | 43 | 260 | 24 | M20 | 50 | 19 | M16 | M16 | 13 | SN216F | SN216FC | 1216 | — | AN16 | AW16X | GS20 | GS17 | SR140×8.5 | 2 | 32 |
| | | | | | | | | | | | | | | | | | | | | | 2216 | 22216EX | | | | | SR140×10 | 1 | 36 |
| | 90(1) | 75 | 170 | 112 | 145 | 345 | 100 | 35 | 212 | 68 | 290 | 24 | M20 | 50 | 19 | M16 | M16 | 17 | SN316F | SN316FC | 1316 | 21316E | AN16 | AW16X | GS20 | GS17 | SR170×14.5 | 2 | 39 |
| | | | | | | | | | | | | | | | | | | | | | 2316 | 22316EX | | | | | SR170×10 | 1 | 48 |
| 85 | 95 | 80 | 150 | 95 | 125 | 320 | 90 | 32 | 185 | 46 | 260 | 24 | M20 | 50 | 19 | M16 | M16 | 14 | SN217F | SN217FC | 1217 | — | AN17 | AW17X | GS21 | GS18 | SR150×9 | 2 | 34 |
| | | | | | | | | | | | | | | | | | | | | | 2217 | 22217EX | | | | | SR150×10 | 1 | 38 |
| | 95(1) | 80 | 180 | 112 | 155 | 380 | 110 | 40 | 223 | 70 | 320 | 28 | M24 | 60 | 24 | M20 | M20 | 24 | SN317F | SN317FC | 1317 | 21317E | AN17 | AW17X | GS21 | GS18 | SR180×14.5 | 2 | 41 |
| | | | | | | | | | | | | | | | | | | | | | 2317 | 22317EX | | | | | SR180×10 | 1 | 50 |
| 90 | 100 | 85 | 160 | 100 | 145 | 345 | 100 | 35 | 195 | 62.4 | 290 | 24 | M20 | 50 | 19 | M16 | M16 | 18 | SN218F | SN218FC | 1218 | — | AN18 | AW18X | GS22 | GS19 | SR160×16.2 | 2 | 35 |
| | | | | | | | | | | | | | | | | | | | | | 2218 | 22218EX | | | | | SR160×11.2 | 2 | 40 |
| | | | | | | | | | | | | | | | | | | | | | — | 23218E | | | | | SR160×10 | 1 | 46 |
| 95 | 110 | 90 | 170 | 112 | 140 | 345 | 100 | 35 | 210 | 53 | 290 | 24 | M20 | 50 | 19 | M16 | M16 | 20 | SN219F | SN219FC | 1219 | — | AN19 | AW19X | GS24 | GS20 | SR170×10.5 | 2 | 37 |
| | | | | | | | | | | | | | | | | | | | | | 2219 | 22219EX | | | | | SR170×10 | 1 | 43 |

Note: (1) When heavy axial load is applied, a spacer with large O.D. and small inner chamfer must be used between the bearing and shaft shoulder to obtain a sufficient contact area.

Remarks: 1. Plummer block housings are housings with oil seals, a plug and a grease nipple only.
To make a complete unit, please order the corresponding bearing, adapter sleeve and locating rings shown in the table additionally.
2. The masses in the table do not include the bearing, nut and locating rings but the bolts.
3. H8, H13 and h13 in the table means tolerance classes specified in JIS B 0401.
4. The tolerance of locating ring O.D. is h12, and 0 ~ -0.2 for the width.
5. Plummer block housings SN224F and larger are provided with eye bolts.
6. The threads for plugs are PT1/8 for SN219F, SN316F and smaller, and PT1/4 for the others.
7. When one locating ring is used for fixed-end, the offset (X dimension) of bearing center from the center of the plummer block housing is a half of the locating ring width.
8. ZF type oil seals are also available instead of GS type seals.
9. SNxxxC type housings for shaft diameters different from the dimensions db or dc shown in the table can be custom ordered.
10. Please specify number of bolt holes.
11. The dimension Y indicates the distance from the bearing center to the outer side face of the nut.

# Plummer Block Housings

## Flat Bottom Type SN2F, SN3F Series for Bearing with Cylindrical Bore

Shaft Diameter: 100～160mm

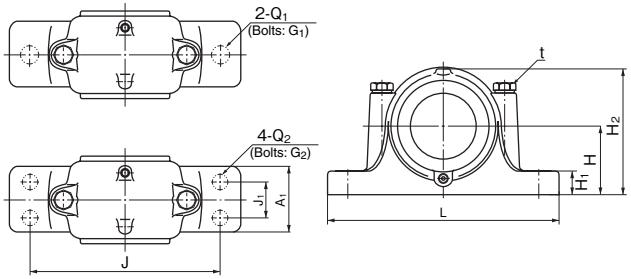


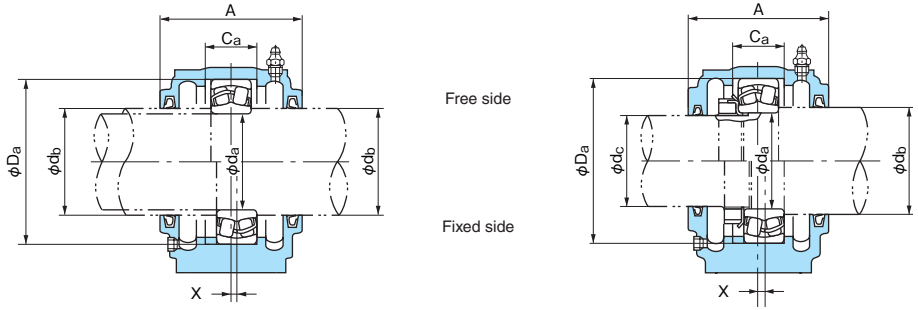


Same Bore Type

Different Bore Type

| Shaft dia. (mm) | | | Dimensions (mm) | | | | | | | | Bolt holes (Reference) | | | | | | t (Nominal) (Reference) | Mass (kg) (Reference) | Designations | | Applicable parts | | | | | | | | Y (Reference) |
|---|---|---|---|---|---|---|---|---|---|---|---|---|---|---|---|---|---|---|---|---|---|---|---|---|---|---|---|---|---|
| da | db | dc | Da (H8) | H (h13) | A | L | A1 | H1 | H2 | Ca (H13) | J | Q1 | G1 (Nominal) | J1 | Q2 | G2 (Nominal) | | | Same Bore Type | Different Bore Type | Self-aligning ball bearings | Spherical roller bearings | Nut | Locking washer | Oil seal db side | Oil seal dc side | Locating ring Designations | Locating ring Q'ty | |
| 100 | 115 | 95 | 180 | 112 | 160 | 380 | 110 | 40 | 218 | 70.3 | 320 | 28 | M24 | 60 | 24 | M20 | M20 | 26 | **SN220F** | **SN220FC** | 1220 | — | AN20 | AW20X | GS26 | GS21 | SR180×18.1 | 2 | 39 |
| | | | | | | | | | | | | | | | | | | | | | 2220 | 22220EX | | | | | SR180×12.1 | 2 | 45 |
| | | | | | | | | | | | | | | | | | | | | | — | 23220E | | | | | SR180×10 | 1 | 52 |
| 110 | 125 | 105 | 200 | 125 | 175 | 410 | 120 | 45 | 240 | 80 | 350 | 28 | M24 | 70 | 24 | M20 | M20 | 28 | **SN222F** | **SN222FC** | 1222 | — | AN22 | AW22X | GS28 | GS23 | SR200×21 | 2 | 42 |
| | | | | | | | | | | | | | | | | | | | | | 2222 | 22222EX | | | | | SR200×13.5 | 2 | 50 |
| | | | | | | | | | | | | | | | | | | | | | — | 23222E | | | | | SR200×10 | 1 | 58 |
| 120 | 135 | 115 | 215 | 140 | 185 | 410 | 120 | 45 | 270 | 86 | 350 | 28 | M24 | 70 | 24 | M20 | M20 | 35 | **SN224F** | **SN224FC** | — | 22224EX | AN24 | AW24X | GS30 | GS26 | SR215×14 | 2 | 53 |
| | | | | | | | | | | | | | | | | | | | | | — | 23224E | | | | | SR215×10 | 1 | 62 |
| 130 | 145 | 125 | 230 | 150 | 190 | 445 | 130 | 50 | 290 | 90 | 380 | 28 | M24 | 70 | 28 | M24 | M24 | 42 | **SN226F** | **SN226FC** | — | 22226EX | AN26 | AW26 | GS33 | GS28 | SR230×13 | 2 | 57 |
| | | | | | | | | | | | | | | | | | | | | | — | 23226E | | | | | SR230×10 | 1 | 65 |
| 140 | 155 | 135 | 250 | 150 | 205 | 500 | 150 | 50 | 305 | 98 | 420 | 35 | M30 | 80 | 28 | M24 | M24 | 52 | **SN228F** | **SN228FC** | — | 22228EX | AN28 | AW28 | GS35 | GS30 | SR250×15 | 2 | 60 |
| | | | | | | | | | | | | | | | | | | | | | — | 23228E | | | | | SR250×10 | 1 | 70 |
| 150 | 165 | 145 | 270 | 160 | 220 | 530 | 160 | 60 | 325 | 106 | 450 | 35 | M30 | 90 | 28 | M24 | M24 | 61 | **SN230F** | **SN230FC** | — | 22230E | AN30 | AW30 | GS37 | GS33 | SR270×16.5 | 2 | 65 |
| | | | | | | | | | | | | | | | | | | | | | — | 23230E | | | | | SR270×10 | 1 | 76 |
| 160 | 175 | 150 | 290 | 170 | 235 | 550 | 160 | 60 | 345 | 114 | 470 | 35 | M30 | 90 | 28 | M24 | M24 | 68 | **SN232F** | **SN232FC** | — | 22232E | AN32 | AW32 | GS39 | GS34 | SR290×17 | 2 | 71 |
| | | | | | | | | | | | | | | | | | | | | | — | 23232E | | | | | SR290×10 | 1 | 83 |

Remarks: 1. Plummer block housings are housings with oil seals, a plug and a grease nipple only.
To make a complete unit, please order the corresponding bearing, adapter sleeve and locating rings shown in the table additionally.
2. The masses in the table do not include the bearing, nut and locating rings but the bolts.
3. H8, H13 and h13 in the table means tolerance classes specified in JIS B 0401.
4. The tolerance of locating ring O.D. is h12, and 0 ~ -0.2 for the width.
5. Plummer block housings SN224F and larger are provided with eye bolts.
6. The threads for plugs are PT1/8 for SN219F, SN316F and smaller, and PT1/4 for the others.
7. When one locating ring is used for fixed-end, the offset (X dimension) of bearing center from the center of the plummer block housing is a half of the locating ring width.
8. ZF type oil seals are also available instead of GS type seals.
9. SNxxxC type housings for shaft diameters different from the dimensions db or dc shown in the table can be custom ordered.
10. Please specify number of bolt holes.
11. The dimension Y indicates the distance from the bearing center to the outer side face of the nut.

# Plummer Block Housings

## SD5, SD6, SD30, SD31 Series for Bearing with Adapter Sleeve

Shaft Diameter: 150～240mm

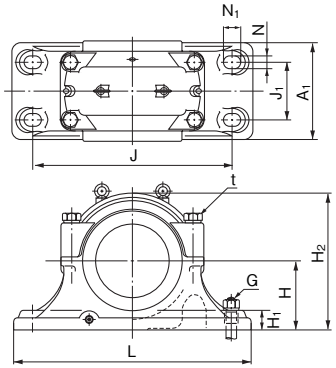


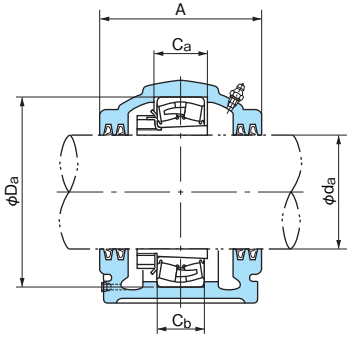


Through Shaft Type

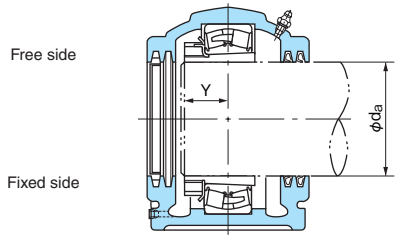


Shaft End Type

| Shaft dia. da (mm) | Dimensions (mm) | | | | | | | | | | | | | | | Mass (kg) (Reference) | Designations | | Applicable parts | | | Y (Reference) |
|---|---|---|---|---|---|---|---|---|---|---|---|---|---|---|---|---|---|---|---|---|---|---|
| | Da (H8) | H (h13) | J | J1 | N | N1 | A | L | A1 | H1 | H2 | Ca (H13) | Cb (H13) | G (Nominal) | t (Nominal) (Reference) | | Free side | Fixed side | Spherical roller bearings | Adapter sleeve | Oil seal | |
| 150 | 260 | 160 | 450 | 110 | 36 | 46 | 230 | 540 | 200 | 50 | 315 | 77 | 67 | M30 | M24 | 70 | **SD3034** | **SD3034G** | 23034EK | H3034 | GS34 | 66 |
| | 280 | 170 | 470 | 120 | 36 | 46 | 250 | 560 | 220 | 50 | 335 | 98 | 88 | M30 | M24 | 75 | **SD3134** | **SD3134G** | 23134EK | H3134 | GS34 | 76 |
| | 310 | 180 | 510 | 140 | 36 | 46 | 270 | 620 | 250 | 60 | 360 | 96 | 86 | M30 | M24 | 100 | **SD534** | **SD534G** | 22234EK | H3134 | GS34 | 75 |
| | 360 | 210 | 610 | 170 | 36 | 46 | 300 | 740 | 290 | 65 | 420 | 130 | 120 | M30 | M30 | 160 | **SD634** | **SD634G** | 22334EK | H2334 | GS34 | 92 |
| 160 | 280 | 170 | 470 | 120 | 36 | 46 | 250 | 560 | 220 | 50 | 335 | 84 | 74 | M30 | M24 | 79 | **SD3036** | **SD3036G** | 23036EK | H3036 | GS36 | 70 |
| | 300 | 180 | 520 | 140 | 36 | 46 | 270 | 630 | 250 | 55 | 355 | 106 | 96 | M30 | M24 | 94 | **SD3136** | **SD3136G** | 23136EK | H3136 | GS36 | 81 |
| | 320 | 190 | 540 | 150 | 36 | 46 | 280 | 650 | 260 | 60 | 380 | 96 | 86 | M30 | M24 | 110 | **SD536** | **SD536G** | 22236EK | H3136 | GS36 | 76 |
| | 380 | 225 | 640 | 180 | 43 | 59 | 320 | 780 | 310 | 70 | 450 | 136 | 126 | M36 | M30 | 195 | **SD636** | **SD636G** | 22336EK | H2336 | GS36 | 96 |
| 170 | 290 | 170 | 470 | 120 | 36 | 46 | 250 | 560 | 220 | 50 | 340 | 85 | 75 | M30 | M24 | 87 | **SD3038** | **SD3038G** | 23038EK | H3038 | GS38 | 72 |
| | 320 | 190 | 560 | 140 | 36 | 46 | 290 | 680 | 270 | 55 | 385 | 114 | 104 | M30 | M24 | 110 | **SD3138** | **SD3138G** | 23138EK | H3138 | GS38 | 86 |
| | 340 | 200 | 570 | 160 | 36 | 46 | 290 | 700 | 280 | 65 | 400 | 102 | 92 | M30 | M30 | 130 | **SD538** | **SD538G** | 22238EK | H3138 | GS38 | 80 |
| | 400 | 240 | 680 | 190 | 43 | 59 | 330 | 820 | 320 | 70 | 475 | 142 | 132 | M36 | M30 | 210 | **SD638** | **SD638G** | 22338EK | H2338 | GS38 | 100 |
| 180 | 310 | 180 | 510 | 140 | 36 | 46 | 270 | 620 | 250 | 60 | 360 | 92 | 82 | M30 | M24 | 100 | **SD3040** | **SD3040G** | 23040EK | H3040 | GS40 | 76 |
| | 340 | 200 | 570 | 160 | 36 | 46 | 310 | 700 | 280 | 65 | 400 | 122 | 112 | M30 | M30 | 130 | **SD3140** | **SD3140G** | 23140EK | H3140 | GS40 | 91 |
| | 360 | 210 | 610 | 170 | 36 | 46 | 300 | 740 | 290 | 65 | 420 | 108 | 98 | M30 | M30 | 155 | **SD540** | **SD540G** | 22240EK | H3140 | GS40 | 84 |
| | 420 | 250 | 710 | 200 | 43 | 59 | 350 | 860 | 340 | 85 | 500 | 148 | 138 | M36 | M36 | 240 | **SD640** | **SD640G** | 22340EK | H2340 | GS40 | 104 |
| 200 | 340 | 200 | 570 | 160 | 36 | 46 | 290 | 700 | 280 | 65 | 400 | 100 | 90 | M30 | M30 | 130 | **SD3044** | **SD3044G** | 23044EK | H3044 | GS44 | 79 |
| | 370 | 225 | 640 | 180 | 43 | 59 | 320 | 780 | 310 | 70 | 445 | 130 | 120 | M36 | M30 | 180 | **SD3144** | **SD3144G** | 23144EK | H3144 | GS44 | 96 |
| | 400 | 240 | 680 | 190 | 43 | 59 | 330 | 820 | 320 | 70 | 475 | 118 | 108 | M36 | M30 | 205 | **SD544** | **SD544G** | 22244EK | H3144 | GS44 | 90 |
| | 460 | 280 | 770 | 210 | 43 | 59 | 360 | 920 | 350 | 85 | 550 | 155 | 145 | M36 | M36 | 315 | **SD644** | **SD644G** | 22344EK | H2344 | GS44 | 109 |
| 220 | 360 | 210 | 610 | 170 | 36 | 46 | 300 | 740 | 290 | 65 | 420 | 102 | 92 | M30 | M30 | 160 | **SD3048** | **SD3048G** | 23048EK | H3048 | GS48 | 84 |
| | 400 | 240 | 680 | 190 | 43 | 59 | 330 | 820 | 320 | 70 | 475 | 138 | 128 | M36 | M30 | 210 | **SD3148** | **SD3148G** | 23148EK | H3148 | GS48 | 102 |
| | 440 | 260 | 740 | 200 | 43 | 59 | 340 | 880 | 330 | 85 | 515 | 130 | 120 | M36 | M36 | 240 | **SD548** | **SD548G** | 22248EK | H3148 | GS48 | 98 |
| | 500 | 300 | 830 | 230 | 50 | 67 | 390 | 990 | 380 | 100 | 590 | 165 | 155 | M42 | M36 | 405 | **SD648** | **SD648G** | 22348EK | H2348 | GS48 | 116 |
| 240 | 400 | 240 | 680 | 190 | 43 | 59 | 340 | 820 | 320 | 70 | 475 | 114 | 104 | M36 | M30 | 210 | **SD3052** | **SD3052G** | 23052EK | H3052 | GS52 | 90 |
| | 440 | 260 | 740 | 200 | 43 | 59 | 360 | 880 | 350 | 85 | 515 | 154 | 144 | M36 | M36 | 240 | **SD3152** | **SD3152G** | 23152EK | H3152 | GS52 | 112 |
| | 480 | 280 | 790 | 210 | 43 | 59 | 370 | 940 | 360 | 85 | 560 | 140 | 130 | M36 | M36 | 315 | **SD552** | **SD552G** | 22252EK | H3152 | GS52 | 105 |
| | 540 | 325 | 890 | 250 | 50 | 67 | 410 | 1060 | 400 | 100 | 640 | 175 | 165 | M42 | M36 | 480 | **SD652** | **SD652G** | 22352EK | H2352 | GS52 | 123 |

Remarks: 1. Plummer block housings are housings with oil seals, a plug and a grease nipple only.
To make a complete unit, please order the corresponding bearing, adapter sleeve and locating rings shown in the table additionally.
2. Dimension Ca is for the free side housings and dimension Cb for the fixed side housings. (Locating rings are not required in the fixed side housings.)
3. The masses in the table do not include the bearing and adapter sleeve but the bolts.
4. H8, H13 and h13 in the table means tolerance classes specified in JIS B 0401.
5. The thread for a grease nipple is PT1/4, and the threads for tow drain plugs are PT3/8.
6. Plummer block housings listed in the above table are provided with eye bolts.
7. Designations of shaft end type housings have suffix “E” at the end.
8. The dimension Y indicates the distance from the bearing center to the outer side face of the nut.

# Plummer Block Housings

## SD5, SD6, SD30, SD31 Series for Bearing with Adapter Sleeve

Shaft Diameter: 260～300mm

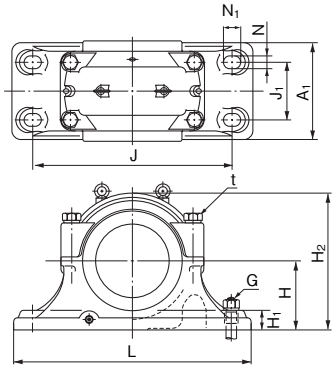


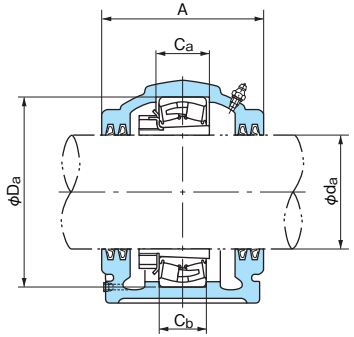


Through Shaft Type

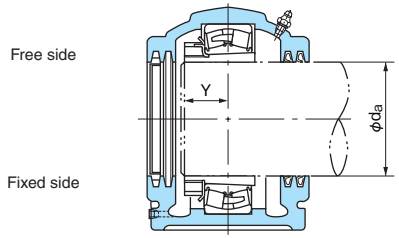


Shaft End Type

| Shaft dia. da (mm) | Dimensions (mm) | | | | | | | | | | | | | | | Mass (kg) (Reference) | Designations | | Applicable parts | | | Y (Reference) |
|---|---|---|---|---|---|---|---|---|---|---|---|---|---|---|---|---|---|---|---|---|---|---|
| | Da (H8) | H (h13) | J | J1 | N | N1 | A | L | A1 | H1 | H2 | Ca (H13) | Cb (H13) | G (Nominal) | t (Nominal) (Reference) | | Free side | Fixed side | Spherical roller bearings | Adapter sleeve | Oil seal | |
| 260 | 420 | 250 | 710 | 200 | 43 | 59 | 350 | 860 | 340 | 85 | 500 | 116 | 106 | M36 | M36 | 240 | **SD3056** | **SD3056G** | 23056EK | H3056 | GS56 | 95 |
| | 460 | 280 | 770 | 210 | 43 | 59 | 360 | 920 | 350 | 85 | 550 | 156 | 146 | M36 | M36 | 315 | **SD3156** | **SD3156G** | 23156EK | H3156 | GS56 | 115 |
| | 500 | 300 | 830 | 230 | 50 | 67 | 390 | 990 | 380 | 100 | 590 | 140 | 130 | M42 | M36 | 390 | **SD556** | **SD556G** | 22256EK | H3156 | GS56 | 107 |
| | 580 | 355 | 930 | 270 | 57 | 77 | 440 | 1110 | 430 | 110 | 690 | 185 | 175 | M48 | M42 | 610 | **SD656** | **SD656G** | 22356EK | H2356 | GS56 | 130 |
| 280 | 460 | 280 | 770 | 210 | 43 | 59 | 360 | 920 | 350 | 85 | 550 | 128 | 118 | M36 | M36 | 300 | **SD3060** | **SD3060G** | 23060EK | H3060 | GS60 | 105 |
| | 500 | 300 | 830 | 230 | 50 | 67 | 390 | 990 | 380 | 100 | 590 | 170 | 160 | M42 | M36 | 405 | **SD3160** | **SD3160G** | 23160EK | H3160 | GS60 | 124 |
| | 540 | 325 | 890 | 250 | 50 | 67 | 410 | 1060 | 400 | 100 | 640 | 150 | 140 | M42 | M36 | 465 | **SD560** | **SD560G** | 22260EK | H3160 | GS60 | 114 |
| 300 | 480 | 280 | 790 | 210 | 43 | 59 | 380 | 940 | 360 | 85 | 560 | 131 | 121 | M36 | M36 | 320 | **SD3064** | **SD3064G** | 23064EK | H3064 | GS64 | 108 |
| | 540 | 325 | 890 | 250 | 50 | 67 | 430 | 1060 | 400 | 100 | 640 | 186 | 176 | M42 | M36 | 480 | **SD3164** | **SD3164G** | 23164EK | H3164 | GS64 | 135 |
| | 580 | 355 | 930 | 270 | 57 | 77 | 440 | 1110 | 430 | 110 | 690 | 160 | 150 | M48 | M42 | 595 | **SD564** | **SD564G** | 22264EK | H3164 | GS64 | 122 |

Remarks: 1. Plummer block housings are housings with oil seals, a plug and a grease nipple only.
To make a complete unit, please order the corresponding bearing, adapter sleeve and locating rings shown in the table additionally.
2. Dimension Ca is for the free side housings and dimension Cb for the fixed side housings. (Locating rings are not required in the fixed side housings.)
3. The masses in the table do not include the bearing and adapter sleeve but the bolts.
4. H8, H13 and h13 in the table means tolerance classes specified in JIS B 0401.
5. The thread for a grease nipple is PT1/4, and the threads for tow drain plugs are PT3/8.
6. Plummer block housings listed in the above table are provided with eye bolts.
7. Designations of shaft end type housings have suffix "E" at the end.
8. The dimension Y indicates the distance from the bearing center to the outer side face of the nut.

# One piece type Plummer Block Housings

## V Series

## for Bearing with Adapter Sleeve

Shaft Diameter: 30～60mm

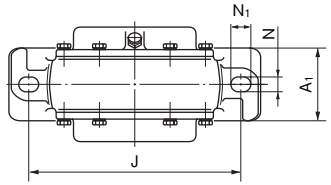


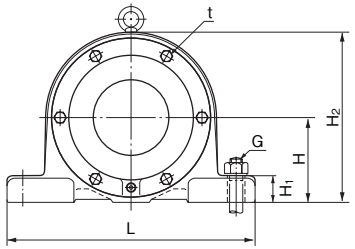


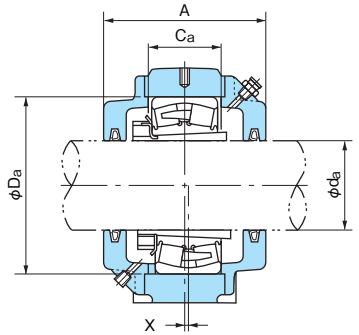


Through Shaft Type

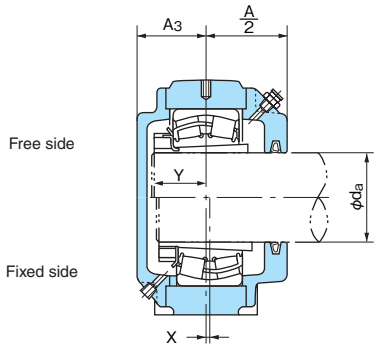


Shaft End Type

| Shaft dia. da (mm) | Dimensions (mm) | | | | | | | | | | | | | | Mass (kg) (Reference) | Designations | | Applicable parts | | | | | | Y (Reference) |
|---|---|---|---|---|---|---|---|---|---|---|---|---|---|---|---|---|---|---|---|---|---|---|---|---|
| | Da (H7) | H (h11) | J | N | N1 | A | L | A1 | A3 | H1 | H2 | Ca | G (Nominal) | t (Nominal) (Reference) | | Through Shaft Type | Shaft End Type | Self-aligning ball bearings | Spherical roller bearings | Adapter sleeve | Oil seal | Locating ring Designations | Locating ring Q'ty | |
| 30 | 80 | 60 | 170 | 16 | 20 | 95 | 205 | 60 | 40.5 | 25 | 118 | 37 | M14 | M6 | 4.8 | **V080C30-30** | **V080C30-0** | 1307K | 21307EK | H307X | GS 7 | SR80×8 | 2 | 21 |
| | | | | | | | | | | | | | | | | | | 2307K | — | H2307X | | SR80×6 | 1 | 26 |
| 35 | 80 | 60 | 170 | 16 | 20 | 95 | 205 | 60 | 40.5 | 25 | 118 | 37 | M14 | M6 | 4.3 | **V080C35-35** | **V080C35-0** | 1208K | — | H208X | GS 8 | SR80×9.5 | 2 | 21 |
| | | | | | | | | | | | | | | | | | | 2208K | 22208EXK | H308X | | SR80×7 | 2 | 23 |
| | 90 | 67 | 170 | 16 | 20 | 100 | 205 | 60 | 42.5 | 25 | 128 | 39 | M14 | M6 | 5.1 | **V090C35-35** | **V090C35-0** | 1308K | 21308EK | H308X | GS 8 | SR90×8 | 2 | 23 |
| | | | | | | | | | | | | | | | | | | 2308K | 22308EXK | H2308X | | SR90×6 | 1 | 28 |
| 40 | 85 | 63 | 170 | 16 | 20 | 98 | 205 | 60 | 42.5 | 25 | 125 | 39 | M14 | M6 | 4.7 | **V085C40-40** | **V085C40-0** | 1209K | — | H209X | GS 9 | SR85×10 | 2 | 22 |
| | | | | | | | | | | | | | | | | | | 2209K | 22209EXK | H309X | | SR85×8 | 2 | 24 |
| | 100 | 71 | 210 | 16 | 23 | 106 | 255 | 70 | 47 | 28 | 140 | 42 | M14 | M6 | 6.9 | **V100C40-40** | **V100C40-0** | 1309K | 21309EK | H309X | GS 9 | SR100×8.5 | 2 | 25 |
| | | | | | | | | | | | | | | | | | | 2309K | 22309EXK | H2309X | | SR100×6 | 1 | 31 |
| 45 | 90 | 67 | 170 | 16 | 20 | 100 | 205 | 60 | 42.5 | 25 | 128 | 39 | M14 | M6 | 4.6 | **V090C45-45** | **V090C45-0** | 1210K | — | H210X | GS10 | SR90×9.5 | 2 | 24 |
| | | | | | | | | | | | | | | | | | | 2210K | 22210EXK | H310X | | SR90×8 | 2 | 25 |
| | 110 | 80 | 210 | 21 | 25 | 112 | 255 | 70 | 47 | 30 | 155 | 46 | M18 | M6 | 8.9 | **V110C45-45** | **V110C45-0** | 1310K | 21310EK | H310X | GS10 | SR110×9.5 | 2 | 27 |
| | | | | | | | | | | | | | | | | | | 2310K | 22310EXK | H2310X | | SR110×6 | 1 | 34 |
| 50 | 100 | 71 | 210 | 16 | 23 | 106 | 255 | 70 | 47 | 28 | 140 | 42 | M14 | M6 | 6.4 | **V100C50-50** | **V100C50-0** | 1211K | — | H211X | GS11 | SR100×10.5 | 2 | 25 |
| | | | | | | | | | | | | | | | | | | 2211K | 22211EXK | H311X | | SR100×8.5 | 2 | 27 |
| | 120 | 85 | 230 | 21 | 25 | 118 | 275 | 80 | 50 | 30 | 165 | 49 | M18 | M6 | 11 | **V120C50-50** | **V120C50-0** | 1311K | 21311EK | H311X | GS11 | SR120×10 | 2 | 29 |
| | | | | | | | | | | | | | | | | | | 2311K | 22311EXK | H2311X | | SR120×6 | 1 | 36 |
| 55 | 110 | 80 | 210 | 21 | 25 | 112 | 255 | 70 | 47 | 30 | 155 | 46 | M18 | M6 | 8.0 | **V110C55-55** | **V110C55-0** | 1212K | — | H212X | GS12 | SR110×12 | 2 | 26 |
| | | | | | | | | | | | | | | | | | | 2212K | 22212EXK | H312X | | SR110×9 | 2 | 29 |
| | 130 | 90 | 230 | 21 | 25 | 118 | 280 | 80 | 50 | 30 | 175 | 50 | M18 | M6 | 12 | **V130C55-55** | **V130C55-0** | 1312K | 21312EK | H312X | GS12 | SR130×9.5 | 2 | 31 |
| | | | | | | | | | | | | | | | | | | 2312K | 22312EXK | H2312X | | SR130×4 | 1 | 39 |
| 60 | 120 | 85 | 230 | 21 | 25 | 118 | 275 | 80 | 50 | 30 | 165 | 49 | M18 | M6 | 10 | **V120C60-60** | **V120C60-0** | 1213K | — | H213X | GS13 | SR120×13 | 2 | 28 |
| | | | | | | | | | | | | | | | | | | 2213K | 22213EXK | H313X | | SR120×9 | 2 | 32 |
| | 125 | 90 | 230 | 21 | 25 | 118 | 280 | 80 | 50 | 30 | 175 | 50 | M18 | M6 | 11 | **V125C60-60** | **V125C60-0** | — | 22214EXK | H314X | GS13 | SR125×9.5 | 2 | 32 |
| | 140 | 100 | 260 | 25 | 30 | 136 | 315 | 90 | 58 | 32 | 195 | 56 | M22 | M8 | 18 | **V140C60-60** | **V140C60-0** | 1313K | 21313EK | H313X | GS13 | SR140×11.5 | 2 | 33 |
| | | | | | | | | | | | | | | | | | | 2313K | 22313EXK | H2313X | | SR140×8 | 1 | 40 |
| | 150 | 100 | 260 | 25 | 30 | 140 | 315 | 90 | 60 | 32 | 195 | 56 | M22 | M8 | 16 | **V150C60-60** | **V150C60-0** | — | 21314EK | H314X | GS13 | SR150×10.5 | 2 | 34 |
| | | | | | | | | | | | | | | | | | | — | 22314EXK | H2314X | | SR150×5 | 1 | 42 |

Remarks: 1. Plummer block housings are housings with oil seals, a plug and a grease nipple only.
To make a complete unit, please order the corresponding bearing, adapter sleeve and locating rings shown in the table additionally.
2. The masses in the table do not include the bearing, adapter sleeve and locating rings.
3. H7 and h11 in the table means tolerance classes specified in JIS B 0401.
4. The tolerance of locating ring O.D. is h12, and 0 ~ -0.2 for the width.
5. Plummer block housings V180 and larger are provided with eye bolts.
6. The threads for plugs and grease nipples are PT1/8 for V170 and smaller, and PT1/4 for V180 and larger.
7. When one locating ring is used for fixed-end, the offset (X dimension) of bearing center from the center of the housing is a half of the locating ring width.
8. ZF type oil seals are also available instead of GS type seals.
9. The dimension Y indicates the distance from the bearing center to the outer side face of the nut.

# One piece type Plummer Block Housings

## V Series

## for Bearing with Adapter Sleeve

Shaft dia.: 65～90mm

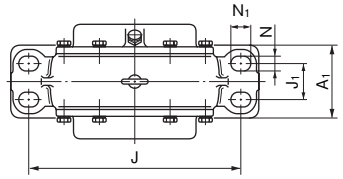


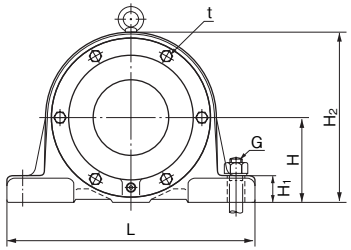


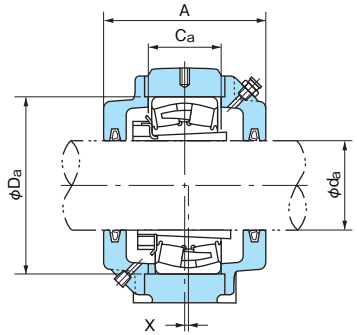


Through Shaft Type

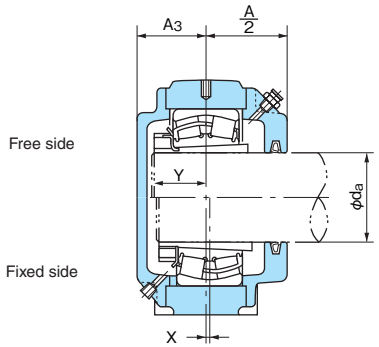


Shaft End Type

| Shaft dia. da (mm) | Dimensions (mm) | | | | | | | | | | | | | | | Mass (kg) (Reference) | Designations | | Applicable parts | | | | | | Y (Reference) |
|---|---|---|---|---|---|---|---|---|---|---|---|---|---|---|---|---|---|---|---|---|---|---|---|---|---|
| | Da (H7) | H (h11) | J | J1 | N | N1 | A | L | A1 | A3 | H1 | H2 | Ca | G (Nominal) | t (Nominal) (Reference) | | Through Shaft Type | Shaft End Type | Self-aligning ball bearings | Spherical roller bearings | Adapter sleeve | Oil seal | Locating ring Designations | Locating ring Q'ty | |
| 65 | 130 | 90 | 230 | — | 21 | 25 | 118 | 280 | 80 | 50 | 30 | 175 | 50 | M18 | M 6 | 11 | **V130C65-65** | **V130C65-0** | 1215K | — | H215X | GS15 | SR130×12.5 | 2 | 30 |
| | | | | | | | | | | | | | | | | | | | 2215K | 22215EXK | H315X | | SR130×9.5 | 2 | 33 |
| | 160 | 112 | 290 | — | 25 | 30 | 150 | 345 | 100 | 65 | 35 | 224 | 62 | M22 | M 8 | 24 | **V160C65-65** | **V160C65-0** | 1315K | 21315EK | H315X | GS15 | SR160×12.5 | 2 | 36 |
| | | | | | | | | | | | | | | | | | | | 2315K | 22315EXK | H2315X | | SR160×7 | 1 | 45 |
| 70 | 140 | 100 | 260 | — | 25 | 30 | 136 | 315 | 90 | 58 | 32 | 195 | 56 | M22 | M 8 | 17 | **V140C70-70** | **V140C70-0** | 1216K | — | H216X | GS16 | SR140×15 | 2 | 32 |
| | | | | | | | | | | | | | | | | | | | 2216K | 22216EXK | H316X | | SR140×11.5 | 2 | 36 |
| | 170 | 112 | 290 | — | 25 | 30 | 165 | 345 | 100 | 72.5 | 35 | 224 | 62 | M22 | M 8 | 22 | **V170C70-70** | **V170C70-0** | 1316K | 21316EK | H316X | GS16 | SR170×11.5 | 2 | 39 |
| | | | | | | | | | | | | | | | | | | | 2316K | 22316EXK | H2316X | | SR170×4 | 1 | 48 |
| 75 | 150 | 100 | 260 | — | 25 | 30 | 140 | 315 | 90 | 60 | 32 | 195 | 56 | M22 | M 8 | 16 | **V150C75-75** | **V150C75-0** | 1217K | — | H217X | GS17 | SR150×14 | 2 | 34 |
| | | | | | | | | | | | | | | | | | | | 2217K | 22217EXK | H317X | | SR150×10 | 2 | 38 |
| | 180 | 125 | 320 | 56 | 23 | 32 | 170 | 380 | 110 | 75 | 40 | 243 | 70 | M20 | M 8 | 29 | **V180C75-75** | **V180C75-0** | 1317K | 21317EK | H317X | GS17 | SR180×14.5 | 2 | 41 |
| | | | | | | | | | | | | | | | | | | | 2317K | 22317EXK | H2317X | | SR180×10 | 1 | 50 |
| 80 | 160 | 112 | 290 | — | 25 | 30 | 150 | 345 | 100 | 65 | 35 | 224 | 62 | M22 | M 8 | 24 | **V160C80-80** | **V160C80-0** | 1218K | — | H218X | GS18 | SR160×16 | 2 | 35 |
| | | | | | | | | | | | | | | | | | | | 2218K | 22218EXK | H318X | | SR160×11 | 2 | 40 |
| | 190 | 125 | 320 | 56 | 23 | 32 | 170 | 380 | 110 | 75 | 40 | 243 | 70 | M20 | M 8 | 26 | **V190C80-80** | **V190C80-0** | 1318K | 21318EK | H318X | GS18 | SR190×13.5 | 2 | 42 |
| | | | | | | | | | | | | | | | | | | | 2318K | 22318EXK | H2318X | | SR190×6 | 1 | 52 |
| 85 | 170 | 112 | 290 | — | 25 | 30 | 165 | 345 | 100 | 72.5 | 35 | 224 | 62 | M22 | M 8 | 22 | **V170C85-85** | **V170C85-0** | 1219K | — | H219X | GS19 | SR170×15 | 2 | 37 |
| | | | | | | | | | | | | | | | | | | | 2219K | 22219EXK | H319X | | SR170×9.5 | 2 | 43 |
| | 200 | 132 | 350 | 60 | 23 | 32 | 190 | 410 | 120 | 82 | 45 | 265 | 82 | M20 | M10 | 40 | **V200C85-85** | **V200C85-0** | 1319K | 21319EK | H319X | GS19 | SR200×18.5 | 2 | 44 |
| | | | | | | | | | | | | | | | | | | | 2319K | 22319EXK | H2319X | | SR200×15 | 1 | 55 |
| 90 | 180 | 125 | 320 | 56 | 23 | 32 | 170 | 380 | 110 | 75 | 40 | 243 | 70 | M20 | M 8 | 28 | **V180C90-90** | **V180C90-0** | 1220K | — | H220X | GS20 | SR180×18 | 2 | 39 |
| | | | | | | | | | | | | | | | | | | | 2220K | 22220EXK | H320X | | SR180×12 | 2 | 45 |
| | 215 | 140 | 350 | 60 | 23 | 32 | 190 | 410 | 120 | 82 | 45 | 280 | 82 | M20 | M10 | 42 | **V215C90-90** | **V215C90-0** | 1320K | 21320EK | H320X | GS20 | SR215×17.5 | 2 | 46 |
| | | | | | | | | | | | | | | | | | | | 2320K | 22320EXK | H2320X | | SR215×9 | 1 | 59 |

Remarks: 1. Plummer block housings are housings with oil seals, a plug and a grease nipple only.
To make a complete unit, please order the corresponding bearing, adapter sleeve and locating rings shown in the table additionally.
2. The masses in the table do not include the bearing, adapter sleeve and locating rings.
3. H7 and h11 in the table means tolerance classes specified in JIS B 0401.
4. The tolerance of locating ring O.D. is h12, and 0 ~ -0.2 for the width.
5. Plummer block housings V180 and larger are provided with eye bolts.
6. The threads for plugs and grease nipples are PT1/8 for V170 and smaller, and PT1/4 for V180 and larger.
7. When one locating ring is used for fixed-end, the offset (X dimension) of bearing center from the center of the housing is a half of the locating ring width.
8. ZF type oil seals are also available instead of GS type seals.
9. The dimension Y indicates the distance from the bearing center to the outer side face of the nut.

# One piece type Plummer Block Housings

## V Series

## for Bearing with Adapter Sleeve

Shaft Diameter: 100～135mm

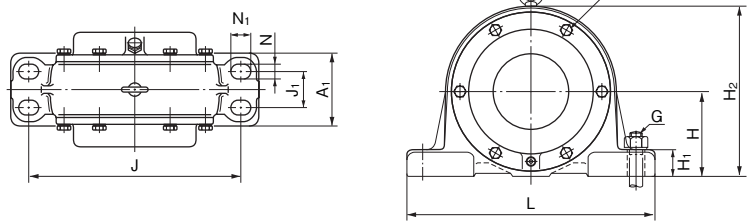


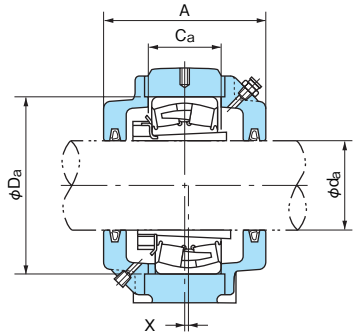


Through Shaft Type

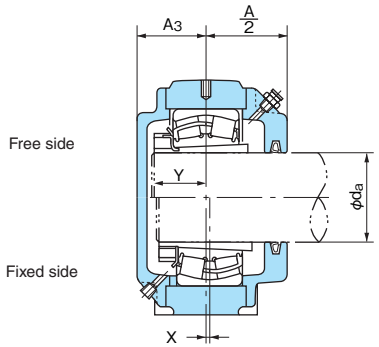


Shaft End Type

| Shaft dia. da (mm) | Dimensions (mm) | | | | | | | | | | | | | | | Mass (kg) (Reference) | Designations | | Applicable parts | | | | | | Y (Reference) |
|---|---|---|---|---|---|---|---|---|---|---|---|---|---|---|---|---|---|---|---|---|---|---|---|---|---|
| | Da (H7) | H (h11) | J | J1 | N | N1 | A | L | A1 | A3 | H1 | H2 | Ca | G (Nominal) | t (Nominal) (Reference) | | Through Shaft Type | Shaft End Type | Self-aligning ball bearings | Spherical roller bearings | Adapter sleeve | Oil seal | Locating ring Designations | Locating ring Q'ty | |
| 100 | 170 | 112 | 290 | — | 25 | 30 | 165 | 345 | 100 | 72.5 | 35 | 224 | 62 | M22 | M 8 | 20 | **V170C100-100** | **V170C100-0** | — | 23022EK | H322X | GS22 | SR170×8.5 | 2 | 46 |
| | 180 | 125 | 320 | 56 | 23 | 32 | 170 | 380 | 110 | 75 | 40 | 243 | 70 | M20 | M 8 | 26 | **V180C100-100** | **V180C100-0** | — | 23122EK | H3122X | GS22 | SR180×14 | 1 | 51 |
| | 200 | 132 | 350 | 60 | 23 | 32 | 190 | 410 | 120 | 82 | 45 | 265 | 82 | M20 | M10 | 39 | **V200C100-100** | **V200C100-0** | 1222K | — | H222X | GS22 | SR200×22 | 2 | 42 |
| | | | | | | | | | | | | | | | | | | | 2222K | 22222EXK | H322X | | SR200×14.5 | 2 | 50 |
| | | | | | | | | | | | | | | | | | | | — | 23222EK | H2322X | | SR200×12.2 | 1 | 58 |
| | 240 | 160 | 390 | 80 | 23 | 32 | 218 | 470 | 150 | 96 | 50 | 315 | 96 | M20 | M10 | 60 | **V240C100-100** | **V240C100-0** | 1322K | 21322EK | H322X | GS22 | SR240×23 | 2 | 48 |
| | | | | | | | | | | | | | | | | | | | 2322K | 22322EXK | H2322X | | SR240×16 | 1 | 63 |
| 110 | 180 | 125 | 320 | 56 | 23 | 32 | 170 | 380 | 110 | 75 | 40 | 243 | 70 | M20 | M 8 | 25 | **V180C110-110** | **V180C110-0** | — | 23024EK | H3024X | GS24 | SR180×12 | 2 | 47 |
| | 200 | 132 | 350 | 60 | 23 | 32 | 190 | 410 | 120 | 82 | 45 | 265 | 82 | M20 | M10 | 39 | **V200C110-110** | **V200C110-0** | — | 23124EK | H3124X | GS24 | SR200×20 | 1 | 55 |
| | 215 | 140 | 350 | 60 | 23 | 32 | 190 | 410 | 120 | 82 | 45 | 280 | 82 | M20 | M10 | 41 | **V215C110-110** | **V215C110-0** | — | 22224EXK | H3124X | GS24 | SR215×12 | 2 | 53 |
| | | | | | | | | | | | | | | | | | | | — | 23224EK | H2324X | | SR215×6 | 1 | 62 |
| | 260 | 170 | 450 | 92 | 29 | 42 | 236 | 540 | 160 | 105 | 60 | 335 | 103 | M24 | M10 | 72 | **V260C110-110** | **V260C110-0** | — | 22324EK | H2324X | GS24 | SR260×17 | 1 | 67 |
| 115 | 200 | 132 | 350 | 60 | 23 | 32 | 190 | 410 | 120 | 82 | 45 | 265 | 82 | M20 | M10 | 38 | **V200C115-115** | **V200C115-0** | — | 23026EK | H3026 | GS26 | SR200×15 | 2 | 51 |
| | 210 | 140 | 350 | 60 | 23 | 32 | 190 | 410 | 120 | 82 | 45 | 280 | 82 | M20 | M10 | 42 | **V210C115-115** | **V210C115-0** | — | 23126EK | H3126 | GS26 | SR210×18 | 1 | 57 |
| | 230 | 150 | 380 | 65 | 23 | 32 | 200 | 450 | 130 | 87 | 50 | 300 | 86 | M20 | M10 | 50 | **V230C115-115** | **V230C115-0** | — | 22226EXK | H3126 | GS26 | SR230×11 | 2 | 57 |
| | | | | | | | | | | | | | | | | | | | — | 23226EK | H2326 | | SR230×6 | 1 | 65 |
| | 280 | 180 | 470 | 92 | 29 | 42 | 243 | 560 | 160 | 108.5 | 60 | 355 | 108 | M24 | M10 | 82 | **V280C115-115** | **V280C115-0** | — | 22326EK | H2326 | GS26 | SR280×15 | 1 | 72 |
| 125 | 210 | 140 | 350 | 60 | 23 | 32 | 190 | 410 | 120 | 82 | 45 | 280 | 82 | M20 | M10 | 40 | **V210C125-125** | **V210C125-0** | — | 23028EK | H3028 | GS28 | SR210×14.5 | 2 | 53 |
| | 225 | 150 | 380 | 65 | 23 | 32 | 200 | 450 | 130 | 87 | 50 | 300 | 86 | M20 | M10 | 50 | **V225C125-125** | **V225C125-0** | — | 23128EK | H3128 | GS28 | SR225×18 | 1 | 60 |
| | 250 | 160 | 420 | 80 | 23 | 32 | 218 | 500 | 150 | 96 | 50 | 315 | 94 | M20 | M10 | 54 | **V250C125-125** | **V250C125-0** | — | 22228EXK | H3128 | GS28 | SR250×13 | 2 | 60 |
| | | | | | | | | | | | | | | | | | | | — | 23228EK | H2328 | | SR250×6 | 1 | 70 |
| | 300 | 190 | 520 | 92 | 29 | 50 | 250 | 610 | 170 | 112 | 65 | 375 | 113 | M24 | M12 | 97 | **V300C125-125** | **V300C125-0** | — | 22328EK | H2328 | GS28 | SR300×11 | 1 | 77 |
| 135 | 225 | 150 | 380 | 65 | 23 | 32 | 200 | 450 | 130 | 87 | 50 | 300 | 86 | M20 | M10 | 50 | **V225C135-135** | **V225C135-0** | — | 23030EK | H3030 | GS30 | SR225×15 | 2 | 56 |
| | 250 | 160 | 420 | 80 | 23 | 32 | 218 | 500 | 150 | 96 | 50 | 315 | 94 | M20 | M10 | 52 | **V250C135-135** | **V250C135-0** | — | 23130EK | H3130 | GS30 | SR250×14 | 1 | 68 |
| | 270 | 170 | 450 | 92 | 29 | 42 | 236 | 540 | 160 | 105 | 60 | 335 | 103 | M24 | M10 | 64 | **V270C135-135** | **V270C135-0** | — | 22230EK | H3130 | GS30 | SR270×15 | 2 | 65 |
| | | | | | | | | | | | | | | | | | | | — | 23230EK | H2330 | | SR270×7 | 1 | 76 |
| | 320 | 200 | 560 | 92 | 29 | 50 | 258 | 660 | 180 | 116 | 65 | 405 | 122 | M24 | M12 | 128 | **V320C135-135** | **V320C135-0** | — | 22330EK | H2330 | GS30 | SR320×14 | 1 | 82 |

Remarks: 1. Plummer block housings are housings with oil seals, a plug and a grease nipple only.
To make a complete unit, please order the corresponding bearing, adapter sleeve and locating rings shown in the table additionally.
2. The masses in the table do not include the bearing, adapter sleeve and locating rings.
3. H7 and h11 in the table means tolerance classes specified in JIS B 0401.
4. The tolerance of locating ring O.D. is h12, and 0 ~ -0.2 for the width.
5. Plummer block housings V180 and larger are provided with eye bolts.
6. The threads for plugs and grease nipples are PT1/8 for V170 and smaller, and PT1/4 for V180 and larger.
7. When one locating ring is used for fixed-end, the offset (X dimension) of bearing center from the center of the housing is a half of the locating ring width.
8. ZF type oil seals are also available instead of GS type seals.
9. The dimension Y indicates the distance from the bearing center to the outer side face of the nut.

# One piece type Plummer Block Housings

## V Series

## for Bearing with Adapter Sleeve

Shaft Diameter: 140～200mm

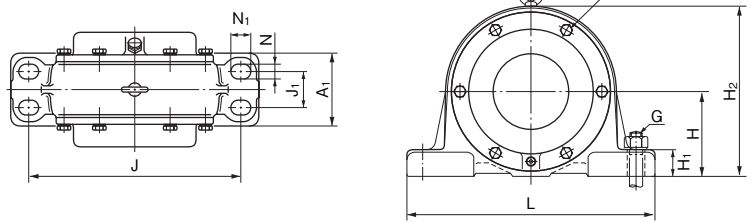


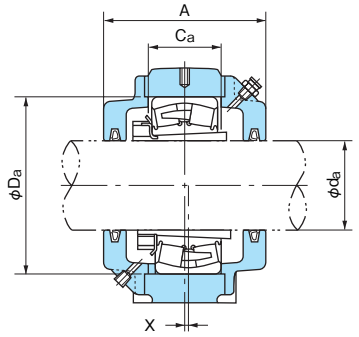


Through Shaft Type

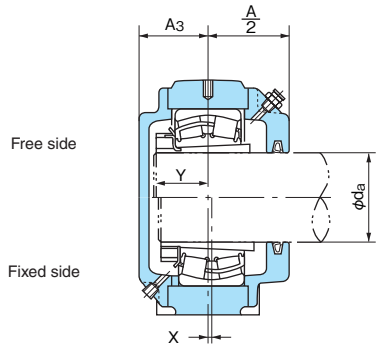


Shaft End Type

| Shaft dia. da (mm) | Dimensions (mm) | | | | | | | | | | | | | | | Mass (kg) (Reference) | Designations | | Applicable parts | | | | | Y (Reference) |
|---|---|---|---|---|---|---|---|---|---|---|---|---|---|---|---|---|---|---|---|---|---|---|---|---|
| | Da (H7) | H (h11) | J | J1 | N | N1 | A | L | A1 | A3 | H1 | H2 | Ca | G (Nominal) | t (Nominal) (Reference) | | Through Shaft Type | Shaft End Type | Spherical roller bearings | Adapter sleeve | Oil seal | Locating ring Designations | Locating ring Q'ty | |
| 140 | 240 | 160 | 390 | 80 | 23 | 32 | 218 | 470 | 150 | 96 | 50 | 315 | 96 | M20 | M10 | 57 | **V240C140-140** | **V240C140-0** | 23032EK | H3032 | GS32 | SR240×18 | 2 | 61 |
| | 270 | 170 | 450 | 92 | 29 | 42 | 236 | 540 | 160 | 105 | 60 | 335 | 103 | M24 | M10 | 60 | **V270C140-140** | **V270C140-0** | 23132EK | H3132 | GS32 | SR270×17 | 1 | 74 |
| | 290 | 190 | 470 | 92 | 29 | 50 | 250 | 560 | 170 | 112 | 60 | 375 | 113 | M24 | M12 | 100 | **V290C140-140** | **V290C140-0** | 22232EK | H3132 | GS32 | SR290×16.5 | 2 | 71 |
| | | | | | | | | | | | | | | | | | | | 23232EK | H2332 | | SR290×9 | 1 | 83 |
| | 340 | 212 | 580 | 104 | 33 | 54 | 300 | 680 | 190 | 137 | 65 | 425 | 130 | M27 | M12 | 143 | **V340C140-140** | **V340C140-0** | 22332EK | H2332 | GS32 | SR340×16 | 1 | 88 |
| 150 | 260 | 170 | 450 | 92 | 29 | 42 | 236 | 540 | 160 | 105 | 60 | 335 | 103 | M24 | M10 | 69 | **V260C150-150** | **V260C150-0** | 23034EK | H3034 | GS34 | SR260×18 | 2 | 66 |
| | 280 | 180 | 470 | 92 | 29 | 42 | 243 | 560 | 160 | 108.5 | 60 | 355 | 108 | M24 | M10 | 80 | **V280C150-150** | **V280C150-0** | 23134EK | H3134 | GS34 | SR280×20 | 1 | 76 |
| | 310 | 200 | 560 | 92 | 29 | 50 | 258 | 660 | 180 | 116 | 65 | 405 | 122 | M24 | M12 | 120 | **V310C150-150** | **V310C150-0** | 22234EK | H3134 | GS34 | SR310×18 | 2 | 75 |
| | | | | | | | | | | | | | | | | | | | 23234EK | H2334 | | SR310×12 | 1 | 87 |
| 160 | 280 | 180 | 470 | 92 | 29 | 42 | 243 | 560 | 160 | 108.5 | 60 | 355 | 108 | M24 | M10 | 79 | **V280C160-160** | **V280C160-0** | 23036EK | H3036 | GS36 | SR280×17 | 2 | 70 |
| | 300 | 190 | 520 | 92 | 29 | 50 | 250 | 610 | 170 | 112 | 65 | 375 | 113 | M24 | M12 | 95 | **V300C160-160** | **V300C160-0** | 23136EK | H3136 | GS36 | SR300×17 | 1 | 81 |
| | 320 | 200 | 560 | 92 | 29 | 50 | 258 | 660 | 180 | 116 | 65 | 405 | 122 | M24 | M12 | 115 | **V320C160-160** | **V320C160-0** | 22236EK | H3136 | GS36 | SR320×18 | 2 | 76 |
| | | | | | | | | | | | | | | | | | | | 23236EK | H2336 | | SR320×10 | 1 | 89 |
| 170 | 290 | 190 | 470 | 92 | 29 | 50 | 250 | 560 | 170 | 112 | 60 | 375 | 113 | M24 | M12 | 94 | **V290C170-170** | **V290C170-0** | 23038EK | H3038 | GS38 | SR290×19 | 2 | 72 |
| | 320 | 200 | 560 | 92 | 29 | 50 | 258 | 660 | 180 | 116 | 65 | 405 | 122 | M24 | M12 | 124 | **V320C170-170** | **V320C170-0** | 23138EK | H3138 | GS38 | SR320×18 | 1 | 86 |
| | 340 | 212 | 580 | 104 | 33 | 54 | 300 | 680 | 190 | 137 | 65 | 425 | 130 | M27 | M12 | 140 | **V340C170-170** | **V340C170-0** | 22238EK | H3138 | GS38 | SR340×19 | 2 | 80 |
| | | | | | | | | | | | | | | | | | | | 23238EK | H2338 | | SR340×10 | 1 | 94 |
| 180 | 310 | 200 | 560 | 92 | 29 | 50 | 258 | 660 | 180 | 116 | 65 | 405 | 122 | M24 | M12 | 117 | **V310C180-180** | **V310C180-0** | 23040EK | H3040 | GS40 | SR310×20 | 2 | 76 |
| | 340 | 212 | 580 | 104 | 33 | 54 | 300 | 680 | 190 | 137 | 65 | 425 | 130 | M27 | M12 | 138 | **V340C180-180** | **V340C180-0** | 23140EK | H3140 | GS40 | SR340×18 | 1 | 91 |
| 200 | 340 | 212 | 580 | 104 | 33 | 54 | 300 | 680 | 190 | 137 | 65 | 425 | 130 | M27 | M12 | 136 | **V340C200-200** | **V340C200-0** | 23044EK | H3044 | GS44 | SR340×20 | 2 | 79 |

Remarks: 1. Plummer block housings are housings with oil seals, a plug and a grease nipple only.
To make a complete unit, please order the corresponding bearing, adapter sleeve and locating rings shown in the table additionally.
2. The masses in the table do not include the bearing, adapter sleeve and locating rings.
3. H7 and h11 in the table means tolerance classes specified in JIS B 0401.
4. The tolerance of locating ring O.D. is h12, and 0 ~ -0.2 for the width.
5. Plummer block housings V180 and larger are provided with eye bolts.
6. The threads for plugs and grease nipples are PT1/8 for V170 and smaller, and PT1/4 for V180 and larger.
7. When one locating ring is used for fixed-end, the offset (X dimension) of bearing center from the center of the housing is a half of the locating ring width.
8. ZF type oil seals are also available instead of GS type seals.
9. The dimension Y indicates the distance from the bearing center to the outer side face of the nut.

# One piece type Plummer Block Housings

## V Series

## for Bearing with Cylindrical Bore

Shaft Diameter: 35～70mm

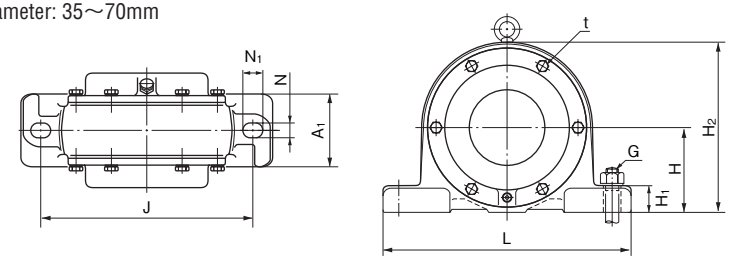


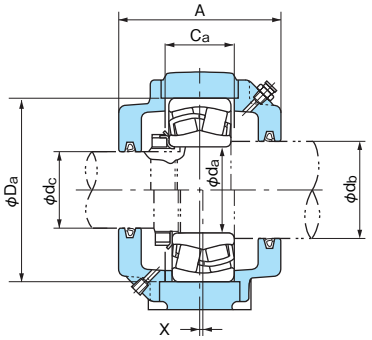


Through Shaft Type

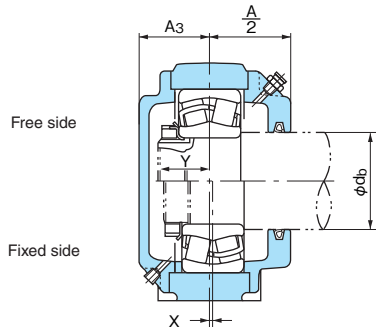


Shaft End Type

| Shaft dia. (mm) | | | Dimensions (mm) | | | | | | | | | | | | | | Mass (kg) (Reference) | Designations | | Applicable parts | | | | | | | | Y (Reference) |
|---|---|---|---|---|---|---|---|---|---|---|---|---|---|---|---|---|---|---|---|---|---|---|---|---|---|---|---|---|
| da | db | dc | Da (H7) | H (h11) | J | N | N1 | A | L | A1 | A3 | H1 | H2 | Ca | G (Nominal) | t (Nominal) (Reference) | | Through Shaft Type | Shaft End Type | Self-aligning ball bearings | Spherical roller bearings | Nut | Locking washer | Oil seal db side | Oil seal dc side | Locating ring Designations | Locating ring Q'ty | |
| 35 | 45 | 30 | 80 | 60 | 170 | 16 | 20 | 95 | 205 | 60 | 40.5 | 25 | 118 | 37 | M14 | M6 | 4.5 | V080C45-30 | V080C45-0 | 1307 | 21307E | AN07 | AW07X | GS10 | GS 7 | SR80×8 | 2 | 21 |
| | | | | | | | | | | | | | | | | | | | | 2307 | — | | | | | SR80×6 | 1 | 26 |
| 40 | 50 | 35 | 80 | 60 | 170 | 16 | 20 | 95 | 205 | 60 | 40.5 | 25 | 118 | 37 | M14 | M6 | 4.0 | V080C50-35 | V080C50-0 | 1208 | — | AN08 | AW08X | GS11 | GS 8 | SR80×9.5 | 2 | 21 |
| | | | | | | | | | | | | | | | | | | | | 2208 | 22208EX | | | | | SR80×7 | 2 | 23 |
| | | | 90 | 67 | 170 | 16 | 20 | 100 | 205 | 60 | 42.5 | 25 | 128 | 39 | M14 | M6 | 4.8 | V090C50-35 | V090C50-0 | 1308 | 21308E | AN08 | AW08X | GS11 | GS 8 | SR90×8 | 2 | 23 |
| | | | | | | | | | | | | | | | | | | | | 2308 | 22308EX | | | | | SR90×6 | 1 | 28 |
| 45 | 55 | 40 | 85 | 63 | 170 | 16 | 20 | 98 | 205 | 60 | 42.5 | 25 | 125 | 39 | M14 | M6 | 4.5 | V085C55-40 | V085C55-0 | 1209 | — | AN09 | AW09X | GS12 | GS 9 | SR85×10 | 2 | 22 |
| | | | | | | | | | | | | | | | | | | | | 2209 | 22209EX | | | | | SR85×8 | 2 | 24 |
| | | | 100 | 71 | 210 | 16 | 23 | 106 | 255 | 70 | 47 | 28 | 140 | 42 | M14 | M6 | 6.4 | V100C55-40 | V100C55-0 | 1309 | 21309E | AN09 | AW09X | GS12 | GS 9 | SR100×8.5 | 2 | 25 |
| | | | | | | | | | | | | | | | | | | | | 2309 | 22309EX | | | | | SR100×6 | 1 | 31 |
| 50 | 60 | 45 | 90 | 67 | 170 | 16 | 20 | 100 | 205 | 60 | 42.5 | 25 | 128 | 39 | M14 | M6 | 4.3 | V090C60-45 | V090C60-0 | 1210 | — | AN10 | AW10X | GS13 | GS10 | SR90×9.5 | 2 | 24 |
| | | | | | | | | | | | | | | | | | | | | 2210 | 22210EX | | | | | SR90×8 | 2 | 25 |
| | | | 110 | 80 | 210 | 21 | 25 | 112 | 255 | 70 | 47 | 30 | 155 | 46 | M18 | M6 | 7.8 | V110C60-45 | V110C60-0 | 1310 | 21310E | AN10 | AW10X | GS13 | GS10 | SR110×9.5 | 2 | 27 |
| | | | | | | | | | | | | | | | | | | | | 2310 | 22310EX | | | | | SR110×6 | 1 | 34 |
| 55 | 65 | 50 | 100 | 71 | 210 | 16 | 23 | 106 | 255 | 70 | 47 | 28 | 140 | 42 | M14 | M6 | 6.0 | V100C65-50 | V100C65-0 | 1211 | — | AN11 | AW11X | GS15 | GS11 | SR100×10.5 | 2 | 25 |
| | | | | | | | | | | | | | | | | | | | | 2211 | 22211EX | | | | | SR100×8.5 | 2 | 27 |
| | | | 120 | 85 | 230 | 21 | 25 | 118 | 275 | 80 | 50 | 30 | 165 | 49 | M18 | M6 | 10 | V120C65-50 | V120C65-0 | 1311 | 21311E | AN11 | AW11X | GS15 | GS11 | SR120×10 | 2 | 29 |
| | | | | | | | | | | | | | | | | | | | | 2311 | 22311EX | | | | | SR120×6 | 1 | 36 |
| 60 | 70 | 55 | 110 | 80 | 210 | 21 | 25 | 112 | 255 | 70 | 47 | 30 | 155 | 46 | M18 | M6 | 7.6 | V110C70-55 | V110C70-0 | 1212 | — | AN12 | AW12X | GS16 | GS12 | SR110×12 | 2 | 26 |
| | | | | | | | | | | | | | | | | | | | | 2212 | 22212EX | | | | | SR110×9 | 2 | 29 |
| | 70(1) | 55 | 130 | 90 | 230 | 21 | 25 | 118 | 280 | 80 | 50 | 30 | 175 | 50 | M18 | M6 | 11 | V130C70-55 | V130C70-0 | 1312 | 21312E | AN12 | AW12X | GS16 | GS12 | SR130×9.5 | 2 | 31 |
| | | | | | | | | | | | | | | | | | | | | 2312 | 22312EX | | | | | SR130×4 | 1 | 39 |
| 65 | 75 | 60 | 120 | 85 | 230 | 21 | 25 | 118 | 275 | 80 | 50 | 30 | 165 | 49 | M18 | M6 | 9.6 | V120C75-60 | V120C75-0 | 1213 | — | AN13 | AW13X | GS17 | GS13 | SR120×13 | 2 | 28 |
| | | | | | | | | | | | | | | | | | | | | 2213 | 22213EX | | | | | SR120×9 | 2 | 32 |
| | 75(1) | 60 | 140 | 100 | 260 | 25 | 30 | 136 | 315 | 90 | 58 | 32 | 195 | 56 | M22 | M8 | 17 | V140C75-60 | V140C75-0 | 1313 | 21313E | AN13 | AW13X | GS17 | GS13 | SR140×11.5 | 2 | 33 |
| | | | | | | | | | | | | | | | | | | | | 2313 | 22313EX | | | | | SR140×8 | 1 | 40 |
| 70 | 80 | 60 | 125 | 90 | 230 | 21 | 25 | 118 | 280 | 80 | 50 | 30 | 175 | 50 | M18 | M6 | 10 | V125C80-60 | V125C80-0 | 1214 | — | AN14 | AW14X | GS18 | GS13 | SR125×13 | 2 | 28 |
| | | | | | | | | | | | | | | | | | | | | 2214 | 22214EX | | | | | SR125×9.5 | 2 | 32 |
| | 80(1) | 60 | 150 | 100 | 260 | 25 | 30 | 140 | 315 | 90 | 60 | 32 | 195 | 56 | M22 | M8 | 16 | V150C80-60 | V150C80-0 | 1314 | 21314E | AN14 | AW14X | GS18 | GS13 | SR150×10.5 | 2 | 34 |
| | | | | | | | | | | | | | | | | | | | | 2314 | 22314EX | | | | | SR150×5 | 1 | 42 |

Note: (1) When heavy axial load is applied, a spacer with large O.D. and small inner chamfer must be used between the bearing and shaft shoulder to obtain a sufficient contact area.

Remarks: 1. Plummer block housings are housings with oil seals, a plug and a grease nipple only.
To make a complete unit, please order the corresponding bearing, nuts and locating rings shown in the table additionally.
2. The masses in the table do not include the bearing, nuts and locating rings.
3. H7 and h11 in the table means tolerance classes specified in JIS B 0401.
4. The tolerance of locating ring O.D. is h12, and 0 ~ -0.2 for the width.
5. Plummer block housings V180 and larger are provided with eye bolts.
6. The threads for plugs and grease nipples are PT1/8 for V170 and smaller, and PT1/4 for V180 and larger.
7. When one locating ring is used for fixed-end, the offset (X dimension) of bearing center from the center of the housing is a half of the locating ring width.
8. ZF type oil seals are also available instead of GS type seals.
9. The dimension Y indicates the distance from the bearing center to the outer side face of the nut.

# One piece type Plummer Block Housings

## V Series

## for Bearing with Cylindrical Bore

Shaft Diameter: 75～100mm

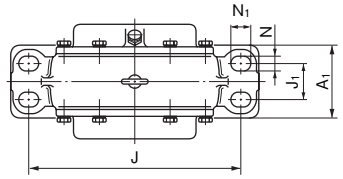


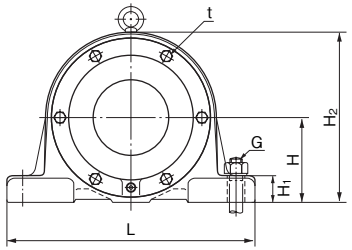


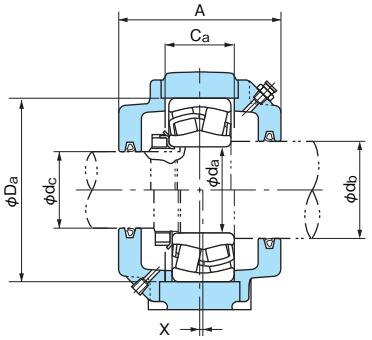


Through Shaft Type

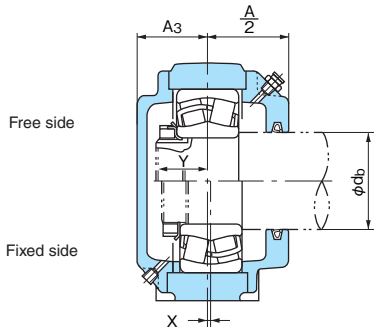


Shaft End Type

| Shaft dia. (mm) | | | Dimensions (mm) | | | | | | | | | | | | | | | Mass (kg) (Reference) | Designations | | Applicable parts | | | | | | | | Y (Reference) |
|---|---|---|---|---|---|---|---|---|---|---|---|---|---|---|---|---|---|---|---|---|---|---|---|---|---|---|---|---|---|
| da | db | dc | Da (H7) | H (h11) | J | J1 | N | N1 | A | L | A1 | A3 | H1 | H2 | Ca | G (Nominal) | t (Nominal) (Reference) | | Through Shaft Type | Shaft End Type | Self-aligning ball bearings | Spherical roller bearings | Nut | Locking washer | Oil seal db side | Oil seal dc side | Locating ring Designations | Locating ring Q'ty | |
| 75 | 85 | 65 | 130 | 90 | 230 | — | 21 | 25 | 118 | 280 | 80 | 50 | 30 | 175 | 50 | M18 | M 6 | 10 | V130C85-65 | V130C85-0 | 1215 | — | AN15 | AW15X | GS19 | GS15 | SR130×12.5 | 2 | 30 |
| | | | | | | — | | | | | | | | | | | | | | | 2215 | 22215EX | | | | | SR130×9.5 | 2 | 33 |
| | 85(1) | 65 | 160 | 112 | 290 | — | 25 | 30 | 150 | 345 | 100 | 65 | 35 | 224 | 62 | M22 | M 8 | 23 | V160C85-65 | V160C85-0 | 1315 | 21315E | AN15 | AW15X | GS19 | GS15 | SR160×12.5 | 2 | 36 |
| | | | | | | — | | | | | | | | | | | | | | | 2315 | 22315EX | | | | | SR160×7 | 1 | 45 |
| 80 | 90 | 70 | 140 | 100 | 260 | — | 25 | 30 | 136 | 315 | 90 | 58 | 32 | 195 | 56 | M22 | M 8 | 17 | V140C90-70 | V140C90-0 | 1216 | — | AN16 | AW16X | GS20 | GS16 | SR140×15 | 2 | 32 |
| | | | | | | — | | | | | | | | | | | | | | | 2216 | 22216EX | | | | | SR140×11.5 | 2 | 36 |
| | 90(1) | 70 | 170 | 112 | 290 | — | 25 | 30 | 165 | 345 | 100 | 72.5 | 35 | 224 | 62 | M22 | M 8 | 21 | V170C90-70 | V170C90-0 | 1316 | 21316E | AN16 | AW16X | GS20 | GS16 | SR170×11.5 | 2 | 39 |
| | | | | | | — | | | | | | | | | | | | | | | 2316 | 22316EX | | | | | SR170×4 | 1 | 48 |
| 85 | 95 | 75 | 150 | 100 | 260 | — | 25 | 30 | 140 | 315 | 90 | 60 | 32 | 195 | 56 | M22 | M 8 | 15 | V150C95-75 | V150C95-0 | 1217 | — | AN17 | AW17X | GS21 | GS17 | SR150×14 | 2 | 34 |
| | | | | | | | | | | | | | | | | | | | | | 2217 | 22217EX | | | | | SR150×10 | 2 | 38 |
| | 95(1) | 75 | 180 | 125 | 320 | 56 | 23 | 32 | 170 | 380 | 110 | 75 | 40 | 243 | 70 | M20 | M 8 | 28 | V180C95-75 | V180C95-0 | 1317 | 21317E | AN17 | AW17X | GS21 | GS17 | SR180×14.5 | 2 | 41 |
| | | | | | | | | | | | | | | | | | | | | | 2317 | 22317EX | | | | | SR180×10 | 1 | 50 |
| 90 | 100 | 80 | 160 | 112 | 290 | — | 25 | 30 | 150 | 345 | 100 | 65 | 35 | 224 | 62 | M22 | M 8 | 23 | V160C100-80 | V160C100-0 | 1218 | — | AN18 | AW18X | GS22 | GS18 | SR160×16 | 2 | 35 |
| | | | | | | | | | | | | | | | | | | | | | 2218 | 22218EX | | | | | SR160×11 | 2 | 40 |
| | 100(1) | 80 | 190 | 125 | 320 | 56 | 23 | 32 | 170 | 380 | 110 | 75 | 40 | 243 | 70 | M20 | M 8 | 25 | V190C100-80 | V190C100-0 | 1318 | 21318E | AN18 | AW18X | GS22 | GS18 | SR190×13.5 | 2 | 42 |
| | | | | | | | | | | | | | | | | | | | | | 2318 | 22318EX | | | | | SR190×6 | 1 | 52 |
| 95 | 110 | 85 | 170 | 112 | 290 | — | 25 | 30 | 165 | 345 | 100 | 72.5 | 35 | 224 | 62 | M22 | M 8 | 21 | V170C110-85 | V170C110-0 | 1219 | — | AN19 | AW19X | GS24 | GS19 | SR170×15 | 2 | 37 |
| | | | | | | | | | | | | | | | | | | | | | 2219 | 22219EX | | | | | SR170×9.5 | 2 | 43 |
| | | | 200 | 132 | 350 | 60 | 23 | 32 | 190 | 410 | 120 | 82 | 45 | 265 | 82 | M20 | M10 | 39 | V200C110-85 | V200C110-0 | 1319 | 21319E | AN19 | AW19X | GS24 | GS19 | SR200×18.5 | 2 | 44 |
| | | | | | | | | | | | | | | | | | | | | | 2319 | 22319EX | | | | | SR200×15 | 1 | 55 |
| 100 | 115 | 90 | 180 | 125 | 320 | 56 | 23 | 32 | 170 | 380 | 110 | 75 | 40 | 243 | 70 | M20 | M 8 | 27 | V180C115-90 | V180C115-0 | 1220 | — | AN20 | AW20X | GS26 | GS20 | SR180×18 | 2 | 39 |
| | | | | | | | | | | | | | | | | | | | | | 2220 | 22220EX | | | | | SR180×12 | 2 | 45 |
| | | | 215 | 140 | 350 | 60 | 23 | 32 | 190 | 410 | 120 | 82 | 45 | 280 | 82 | M20 | M10 | 40 | V215C115-90 | V215C115-0 | 1320 | 21320E | AN20 | AW20X | GS26 | GS20 | SR215×17.5 | 2 | 46 |
| | | | | | | | | | | | | | | | | | | | | | 2320 | 22320EX | | | | | SR215×9 | 1 | 59 |

Note: (1) When heavy axial load is applied, a spacer with large O.D. and small inner chamfer must be used between the bearing and shaft shoulder to obtain a sufficient contact area.

Remarks: 1. Plummer block housings are housings with oil seals, a plug and a grease nipple only.
To make a complete unit, please order the corresponding bearing, nuts and locating rings shown in the table additionally.
2. The masses in the table do not include the bearing, nuts and locating rings.
3. H7 and h11 in the table means tolerance classes specified in JIS B 0401.
4. The tolerance of locating ring O.D. is h12, and 0 ~ -0.2 for the width.
5. Plummer block housings V180 and larger are provided with eye bolts.
6. The threads for plugs and grease nipples are PT1/8 for V170 and smaller, and PT1/4 for V180 and larger.
7. When one locating ring is used for fixed-end, the offset (X dimension) of bearing center from the center of the housing is a half of the locating ring width.
8. ZF type oil seals are also available instead of GS type seals.
9. The dimension Y indicates the distance from the bearing center to the outer side face of the nut.

# One piece type Plummer Block Housings

## V Series

## for Bearing with Cylindrical Bore

Shaft Diameter: 110～160mm

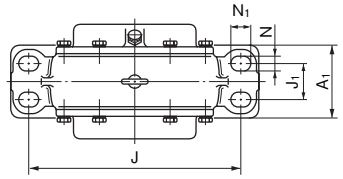


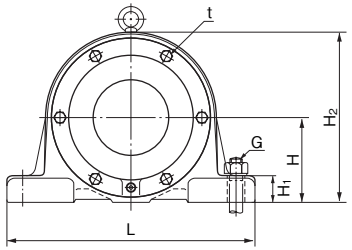


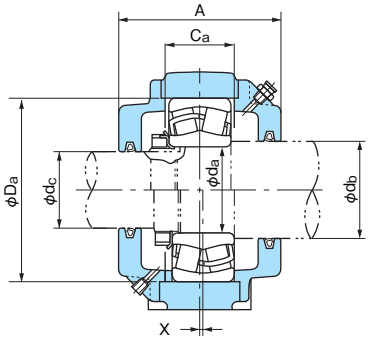


Through Shaft Type

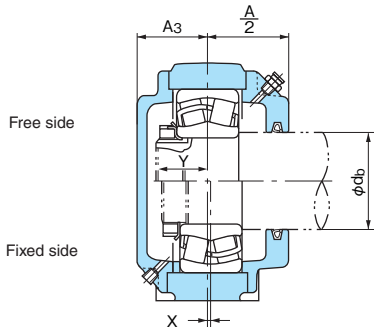


Shaft End Type

| Shaft dia. (mm) | | | Dimensions (mm) | | | | | | | | | | | | | | | Mass (kg) (Reference) | Designations | | Applicable parts | | | | | | | | Y (Reference) |
|---|---|---|---|---|---|---|---|---|---|---|---|---|---|---|---|---|---|---|---|---|---|---|---|---|---|---|---|---|---|
| da | db | dc | Da (H7) | H (h11) | J | J1 | N | N1 | A | L | A1 | A3 | H1 | H2 | Ca | G (Nominal) | t (Nominal) (Reference) | | Through Shaft Type | Shaft End Type | Self-aligning ball bearings | Spherical roller bearings | Nut | Locking washer | Oil seal | | Locating ring | | |
| | | | | | | | | | | | | | | | | | | | | | | | | | db side | dc side | Designations | Q'ty | |
| | 120 | 100 | 170 | 112 | 290 | — | 25 | 30 | 165 | 345 | 100 | 72.5 | 35 | 224 | 62 | M22 | M 8 | 19 | V170C120-100 | V170C120-0 | — | 23022E | AN22 | AW22X | GS27 | GS22 | SR170×8.5 | 2 | 46 |
| | | | 180 | 125 | 320 | 56 | 23 | 32 | 170 | 380 | 110 | 75 | 40 | 243 | 70 | M20 | M 8 | 25 | V180C120-100 | V180C120-0 | — | 23122E | AN22 | AW22X | GS27 | GS22 | SR180×14 | 1 | 51 |
| | 125 | 100 | 200 | 132 | 350 | 60 | 23 | 32 | 190 | 410 | 120 | 82 | 45 | 265 | 82 | M20 | M10 | 38 | V200C125-100 | V200C125-0 | 1222 | — | AN22 | AW22X | GS28 | GS22 | SR200×22 | 2 | 42 |
| 110 | | | | | | | | | | | | | | | | | | | | | 2222 | 22222EX | | | | | SR200×14.5 | 2 | 50 |
| | | | | | | | | | | | | | | | | | | | | | — | 23222E | | | | | SR200×12.2 | 1 | 58 |
| | | | 240 | 160 | 390 | 80 | 23 | 32 | 218 | 470 | 150 | 96 | 50 | 315 | 96 | M20 | M10 | 58 | V240C125-100 | V240C125-0 | 1322 | 21322E | AN22 | AW22X | GS28 | GS22 | SR240×23 | 2 | 48 |
| | | | | | | | | | | | | | | | | | | | | | 2322 | 22322EX | | | | | SR240×16 | 1 | 63 |
| | 130 | 110 | 180 | 125 | 320 | 56 | 23 | 32 | 170 | 380 | 110 | 75 | 40 | 243 | 70 | M20 | M 8 | 24 | V180C130-110 | V180C130-0 | — | 23024E | ANL24 | AWL24X | GS29 | GS24 | SR180×12 | 2 | 47 |
| | | | 200 | 132 | 350 | 60 | 23 | 32 | 190 | 410 | 120 | 82 | 45 | 265 | 82 | M20 | M10 | 37 | V200C130-110 | V200C130-0 | — | 23124E | AN24 | AW24X | GS29 | GS24 | SR200×20 | 1 | 55 |
| 120 | 135 | 110 | 215 | 140 | 350 | 60 | 23 | 32 | 190 | 410 | 120 | 82 | 45 | 280 | 82 | M20 | M10 | 40 | V215C135-110 | V215C135-0 | — | 22224EX | AN24 | AW24X | GS30 | GS24 | SR215×12 | 2 | 53 |
| | | | | | | | | | | | | | | | | | | | | | — | 23224E | | | | | SR215×6 | 1 | 62 |
| | | | 260 | 170 | 450 | 92 | 29 | 42 | 236 | 540 | 160 | 105 | 60 | 335 | 103 | M24 | M10 | 64 | V260C135-110 | V260C135-0 | — | 22324E | AN24 | AW24X | GS30 | GS24 | SR260×17 | 1 | 67 |
| | 140 | 115 | 200 | 132 | 350 | 60 | 23 | 32 | 190 | 410 | 120 | 82 | 45 | 265 | 82 | M20 | M10 | 36 | V200C140-115 | V200C140-0 | — | 23026E | ANL26 | AWL26 | GS32 | GS26 | SR200×15 | 2 | 51 |
| | | | 210 | 140 | 350 | 60 | 23 | 32 | 190 | 410 | 120 | 82 | 45 | 280 | 82 | M20 | M10 | 40 | V210C140-115 | V210C140-0 | — | 23126E | AN26 | AW26 | GS32 | GS26 | SR210×18 | 1 | 57 |
| 130 | 145 | 115 | 230 | 150 | 380 | 65 | 23 | 32 | 200 | 450 | 130 | 87 | 50 | 300 | 86 | M20 | M10 | 48 | V230C145-115 | V230C145-0 | — | 22226EX | AN26 | AW26 | GS33 | GS26 | SR230×11 | 2 | 57 |
| | | | | | | | | | | | | | | | | | | | | | — | 23226E | | | | | SR230×6 | 1 | 65 |
| | 150 | 115 | 280 | 180 | 470 | 92 | 29 | 42 | 243 | 560 | 160 | 108.5 | 60 | 355 | 108 | M24 | M10 | 80 | V280C150-115 | V280C150-0 | — | 22326E | AN26 | AW26 | GS34 | GS26 | SR280×15 | 1 | 72 |
| | 150 | 125 | 210 | 140 | 350 | 60 | 23 | 32 | 190 | 410 | 120 | 82 | 45 | 280 | 82 | M20 | M10 | 39 | V210C150-125 | V210C150-0 | — | 23028E | ANL28 | AWL28 | GS34 | GS28 | SR210×14.5 | 2 | 53 |
| | 155 | 125 | 225 | 150 | 380 | 65 | 23 | 32 | 200 | 450 | 130 | 87 | 50 | 300 | 86 | M20 | M10 | 48 | V225C155-125 | V225C155-0 | — | 23128E | AN28 | AW28 | GS35 | GS28 | SR225×18 | 1 | 60 |
| 140 | | | 250 | 160 | 420 | 80 | 23 | 32 | 218 | 500 | 150 | 96 | 50 | 315 | 94 | M20 | M10 | 53 | V250C155-125 | V250C155-0 | — | 22228EX | AN28 | AW28 | GS35 | GS28 | SR250×13 | 2 | 60 |
| | | | | | | | | | | | | | | | | | | | | | — | 23228E | | | | | SR250×6 | 1 | 70 |
| | 160 | 125 | 300 | 190 | 520 | 92 | 29 | 50 | 250 | 610 | 170 | 112 | 65 | 375 | 113 | M24 | M12 | 94 | V300C160-125 | V300C160-0 | — | 22328E | AN28 | AW28 | GS36 | GS28 | SR300×11 | 1 | 77 |
| | 160(1) | 135 | 225 | 150 | 380 | 65 | 23 | 32 | 200 | 450 | 130 | 87 | 50 | 300 | 86 | M20 | M10 | 48 | V225C160-135 | V225C160-0 | — | 23030E | ANL30 | AWL30 | GS36 | GS30 | SR225×15 | 2 | 56 |
| | 165 | 135 | 250 | 160 | 420 | 80 | 23 | 32 | 218 | 500 | 150 | 96 | 50 | 315 | 94 | M20 | M10 | 50 | V250C165-135 | V250C165-0 | — | 23130E | AN30 | AW30 | GS37 | GS30 | SR250×14 | 1 | 68 |
| 150 | | | 270 | 170 | 450 | 92 | 29 | 42 | 236 | 540 | 160 | 105 | 60 | 335 | 103 | M24 | M10 | 62 | V270C165-135 | V270C165-0 | — | 22230E | AN30 | AW30 | GS37 | GS30 | SR270×15 | 2 | 65 |
| | | | | | | | | | | | | | | | | | | | | | — | 23230E | | | | | SR270×7 | 1 | 76 |
| | 170 | 135 | 320 | 200 | 560 | 92 | 29 | 50 | 258 | 660 | 180 | 116 | 65 | 405 | 122 | M24 | M12 | 113 | V320C170-135 | V320C170-0 | — | 22330E | AN30 | AW30 | GS38 | GS30 | SR320×14 | 1 | 82 |
| | 170(1) | 140 | 240 | 160 | 390 | 80 | 23 | 32 | 218 | 470 | 150 | 96 | 50 | 315 | 96 | M20 | M10 | 55 | V240C170-140 | V240C170-0 | — | 23032E | ANL32 | AWL32 | GS38 | GS32 | SR240×18 | 2 | 61 |
| | 175 | 140 | 270 | 170 | 450 | 92 | 29 | 42 | 236 | 540 | 160 | 105 | 60 | 335 | 103 | M24 | M10 | 58 | V270C175-140 | V270C175-0 | — | 23132E | AN32 | AW32 | GS39 | GS32 | SR270×17 | 1 | 74 |
| 160 | | | 290 | 190 | 470 | 92 | 29 | 50 | 250 | 560 | 170 | 112 | 60 | 375 | 113 | M24 | M12 | 96 | V290C175-140 | V290C175-0 | — | 22232E | AN32 | AW32 | GS39 | GS32 | SR290×16.5 | 2 | 71 |
| | | | | | | | | | | | | | | | | | | | | | — | 23232E | | | | | SR290×9 | 1 | 83 |
| | 180 | 140 | 340 | 212 | 580 | 104 | 33 | 54 | 300 | 680 | 190 | 137 | 65 | 425 | 130 | M27 | M12 | 138 | V340C180-140 | V340C180-0 | — | 22332E | AN32 | AW32 | GS40 | GS32 | SR340×16 | 1 | 88 |

Note: (1) When heavy axial load is applied, a spacer with large O.D. and small inner chamfer must be used between the bearing and shaft shoulder to obtain a sufficient contact area.

Remarks: 1. Plummer block housings are housings with oil seals, a plug and a grease nipple only.
To make a complete unit, please order the corresponding bearing, nuts and locating rings shown in the table additionally.
2. The masses in the table do not include the bearing, nuts and locating rings.
3. H7 and h11 in the table means tolerance classes specified in JIS B 0401.
4. The tolerance of locating ring O.D. is h12, and 0 ~ -0.2 for the width.
5. Plummer block housings V180 and larger are provided with eye bolts.
6. The threads for plugs and grease nipples are PT1/8 for V170 and smaller, and PT1/4 for V180 and larger.
7. When one locating ring is used for fixed-end, the offset (X dimension) of bearing center from the center of the housing is a half of the locating ring width.
8. ZF type oil seals are also available instead of GS type seals.
9. The dimension Y indicates the distance from the bearing center to the outer side face of the nut.

# One piece type Plummer Block Housings

## V Series

## for Bearing with Cylindrical Bore

Shaft Diameter: 170～220mm

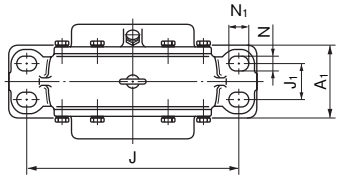


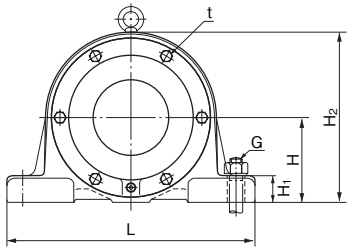


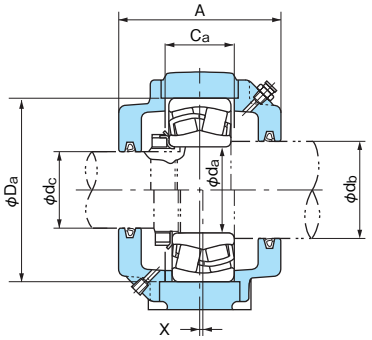


Through Shaft Type

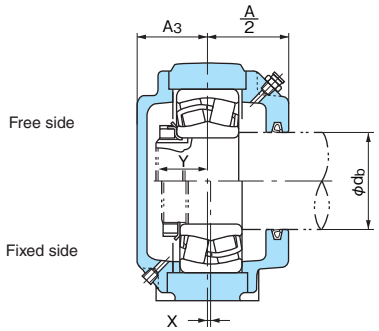


Shaft End Type

| Shaft dia. (mm) da | db | dc | Dimensions (mm) Da (H7) | H (h11) | J | J1 | N | N1 | A | L | A1 | A3 | H1 | H2 | Ca | G (Nominal) | t (Nominal) (Reference) | Mass (kg) (Reference) | Designations Through Shaft Type | Shaft End Type | Applicable parts Spherical roller bearings | Nut | Locking washer | Oil seal db side | dc side | Locating ring Designations | Q'ty | Y (Reference) |
|---|---|---|---|---|---|---|---|---|---|---|---|---|---|---|---|---|---|---|---|---|---|---|---|---|---|---|---|---|
| 170 | 180(1) | 150 | 260 | 170 | 450 | 92 | 29 | 42 | 236 | 540 | 160 | 105 | 60 | 335 | 103 | M24 | M10 | 66 | V260C180-150 | V260C180-0 | 23034E | ANL34 | AWL34 | GS40 | GS34 | SR260×18 | 2 | 66 |
| | 190 | 150 | 280 | 180 | 470 | 92 | 29 | 42 | 243 | 560 | 160 | 108.5 | 60 | 355 | 108 | M24 | M10 | 78 | V280C190-150 | V280C190-0 | 23134E | AN34 | AW34 | GS42 | GS34 | SR280×20 | 1 | 76 |
| | | | 310 | 200 | 560 | 92 | 29 | 50 | 258 | 660 | 180 | 116 | 65 | 405 | 122 | M24 | M12 | 115 | V310C190-150 | V310C190-0 | 22234E | AN34 | AW34 | GS42 | GS34 | SR310×18 | 2 | 75 |
| | | | | | | | | | | | | | | | | | | | | | 23234E | | | | | SR310×12 | 1 | 87 |
| 180 | 190(1) | 160 | 280 | 180 | 470 | 92 | 29 | 42 | 243 | 560 | 160 | 108.5 | 60 | 355 | 108 | M24 | M10 | 78 | V280C190-160 | V280C190-0 | 23036E | ANL36 | AWL36 | GS42 | GS36 | SR280×17 | 2 | 70 |
| | 200 | 160 | 300 | 190 | 520 | 92 | 29 | 50 | 250 | 610 | 170 | 112 | 65 | 375 | 113 | M24 | M12 | 92 | V300C200-160 | V300C200-0 | 23136E | AN36 | AW36 | GS44 | GS36 | SR300×17 | 1 | 81 |
| | | | 320 | 200 | 560 | 92 | 29 | 50 | 258 | 660 | 180 | 116 | 65 | 405 | 122 | M24 | M12 | 110 | V320C200-160 | V320C200-0 | 22236E | AN36 | AW36 | GS44 | GS36 | SR320×18 | 2 | 76 |
| | | | | | | | | | | | | | | | | | | | | | 23236E | | | | | SR320×10 | 1 | 89 |
| 190 | 200(1) | 170 | 290 | 190 | 470 | 92 | 29 | 50 | 250 | 560 | 170 | 112 | 60 | 375 | 113 | M24 | M12 | 91 | V290C200-170 | V290C200-0 | 23038E | ANL38 | AWL38 | GS44 | GS38 | SR290×19 | 2 | 72 |
| | 210 | 170 | 320 | 200 | 560 | 92 | 29 | 50 | 258 | 660 | 180 | 116 | 65 | 405 | 122 | M24 | M12 | 120 | V320C210-170 | V320C210-0 | 23138E | AN38 | AW38 | GS46 | GS38 | SR320×18 | 1 | 86 |
| | | | 340 | 212 | 580 | 104 | 33 | 54 | 300 | 680 | 190 | 137 | 65 | 425 | 130 | M27 | M12 | 135 | V340C210-170 | V340C210-0 | 22238E | AN38 | AW38 | GS46 | GS38 | SR340×19 | 2 | 80 |
| | | | | | | | | | | | | | | | | | | | | | 23238E | | | | | SR340×10 | 1 | 94 |
| 200 | 210(1) | 180 | 310 | 200 | 560 | 92 | 29 | 50 | 258 | 660 | 180 | 116 | 65 | 405 | 122 | M24 | M12 | 125 | V310C210-180 | V310C210-0 | 23040E | ANL40 | AWL40 | GS46 | GS40 | SR310×20 | 2 | 76 |
| | 220 | 180 | 340 | 212 | 580 | 104 | 33 | 54 | 300 | 680 | 190 | 137 | 65 | 425 | 130 | M27 | M12 | 135 | V340C220-180 | V340C220-0 | 23140E | AN40 | AW40 | GS48 | GS40 | SR340×18 | 1 | 91 |
| 220 | 230(1) | 200 | 340 | 212 | 580 | 104 | 33 | 54 | 300 | 680 | 190 | 137 | 65 | 425 | 130 | M27 | M12 | 132 | V340C230-200 | V340C230-0 | 23044E | ANL44 | ALL44 | GS50 | GS44 | SR340×20 | 2 | 79 |

Note: (1) When heavy axial load is applied, a spacer with large O.D. and small inner chamfer must be used between the bearing and shaft shoulder to obtain a sufficient contact area.

Remarks: 1. Plummer block housings are housings with oil seals, a plug and a grease nipple only.
To make a complete unit, please order the corresponding bearing, nuts and locating rings shown in the table additionally.
2. The masses in the table do not include the bearing, nuts and locating rings.
3. H7 and h11 in the table means tolerance classes specified in JIS B 0401.
4. The tolerance of locating ring O.D. is h12, and 0 ~ -0.2 for the width.
5. Plummer block housings V180 and larger are provided with eye bolts.
6. The threads for plugs and grease nipples are PT1/8 for V170 and smaller, and PT1/4 for V180 and larger.
7. When one locating ring is used for fixed-end, the offset (X dimension) of bearing center from the center of the housing is a half of the locating ring width.
8. ZF type oil seals are also available instead of GS type seals.
9. The dimension Y indicates the distance from the bearing center to the outer side face of the nut.

# Mounting Accessories

Adapter Assemblies
Withdrawal Sleeves
Locknuts
Lockwashers
Lock plates

### Adapter Assemblies and Applied Bearing Bore Numbers

| Bearing | | Adapter Assembly series | | | | | |
|---|---|---|---|---|---|---|---|
| | | H30 | H31 | H2 | H32 | H3 | H23 |
| Self-aligning Ball Bearings | 12 K | | | 04～22 | | | |
| | 22 K | | | | | 04～22 | |
| | 13 K | | | | | 04～22 | |
| | 23 K | | | | | | 04～22 |
| Spherical Roller Bearings | 230 K | 24～/500 | | | | | |
| | 231 K | | 22～/500 | | | | |
| | 222 K | | 24～64 | | | 05～22 | |
| | 232 K | | | | 60～/500 | | 18～56 |
| | 213 K | | | | | 05～22 | |
| | 223 K | | | | | | 08～56 |
| Ball Bearings for Bearing Units | UK2 | | | | | | 05～18 |
| | UKX | | | | | | 05～28 |
| | UK3 | | | | | | 05～20 |

### Withdrawal Sleeves and Applied Bearing Bore Numbers

| Bearing | | Withdrawal Sleeve series | | | | | | |
|---|---|---|---|---|---|---|---|---|
| | | AH30 | AH31 | AH2 | AH22 | AH32 | AH3 | AH23 |
| Self-aligning Ball Bearings | 12 K | | | 08～22 | | | | |
| | 22 K | | 22 | | | | | 08～20 |
| | 13 K | | | | | | 08～22 | |
| | 23 K | | | | | | | 08～22 |
| Spherical Roller Bearings | 230 K | 24～/500 | | | | | | |
| | 231 K | | 22～/500 | | | | | |
| | 222 K | | 22～34 | | 36～64 | | 08～20 | |
| | 232 K | | | | | 18～40<br>60～/500 | | 44～56 |
| | 213 K | | | | | | 08～22 | |
| | 223 K | | | | | | | 08～56 |

Note: In case of spherical roller bearings without outer rib on inner ring, locknut may have a larger bore than the outside diameter of the inner ring. Please check the dimensions.

# Adapter Assemblies
## Series H30 / HE30

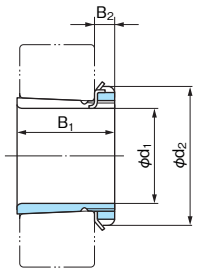


Adapter Ass'y with Lockwasher

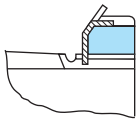

suffix X

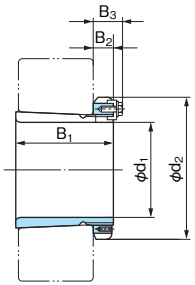


Adapter Ass'y with Lock Plate

| Bearing bore No. | Dimensions (mm) | | | | | | Mass(1) (kg) (reference) | Adapter Ass'y No. | | Part No. | | | |
|---|---|---|---|---|---|---|---|---|---|---|---|---|---|
| | d1 | | d2 | B1 | B2 | B3 | | | | | | | |
| | H | HE | | | | | | H | HE | Adapter(2) sleeve | Locknut | Lockwasher | Lock Plate |
| **24** | 110 | 107.95 | 145 | 72 | 22 | — | 1.96 | H3024X | HE3024X | A3024X | ANL 24 | AWL 24X | — |
| **26** | 115 | 114.30 | 155 | 80 | 23 | — | 2.85 | H3026 | HE3026 | A3026 | ANL 26 | AWL 26 | — |
| **28** | 125 | 127.00 | 165 | 82 | 24 | — | 3.18 | H3028 | HE3028 | A3028 | ANL 28 | AWL 28 | — |
| **30** | 135 | 133.35 | 180 | 87 | 26 | — | 3.90 | H3030 | HE3030 | A3030 | ANL 30 | AWL 30 | — |
| **32** | 140 | 139.70 | 190 | 93 | 28 | — | 5.20 | H3032 | HE3032 | A3032 | ANL 32 | AWL 32 | — |
| **34** | 150 | 152.40 | 200 | 101 | 29 | — | 6.00 | H3034 | HE3034 | A3034 | ANL 34 | AWL 34 | — |
| **36** | 160 | 165.10 | 210 | 109 | 30 | — | 6.85 | H3036 | HE3036 | A3036 | ANL 36 | AWL 36 | — |
| **38** | 170 | 171.45 | 220 | 112 | 31 | — | 7.45 | H3038 | HE3038 | A3038 | ANL 38 | AWL 38 | — |
| **40** | 180 | 177.80 | 240 | 120 | 32 | — | 9.20 | H3040 | HE3040 | A3040 | ANL 40 | AWL 40 | — |
| **44** | 200 | — | 260 | 128 | 30 | 41 | 10.3 | H3044 | — | A3044 | ANL 44 | — | ALL 44 |
| **48** | 220 | — | 290 | 133 | 34 | 46 | 13.4 | H3048 | — | A3048 | ANL 48 | — | ALL 48 |
| **52** | 240 | — | 310 | 145 | 34 | 46 | 15.6 | H3052 | — | A3052 | ANL 52 | — | ALL 48 |
| **56** | 260 | — | 330 | 152 | 38 | 50 | 17.7 | H3056 | — | A3056 | ANL 56 | — | ALL 56 |
| **60** | 280 | — | 360 | 168 | 42 | 54 | 22.8 | H3060 | — | A3060 | ANL 60 | — | ALL 60 |
| **64** | 300 | — | 380 | 171 | 42 | 55 | 24.6 | H3064 | — | A3064 | ANL 64 | — | ALL 64 |
| **68** | 320 | — | 400 | 187 | 45 | 58 | 28.6 | H3068 | — | A3068 | ANL 68 | — | ALL 64 |
| **72** | 340 | — | 420 | 188 | 45 | 58 | 30.6 | H3072 | — | A3072 | ANL 72 | — | ALL 72 |
| **76** | 360 | — | 450 | 193 | 48 | 62 | 35.8 | H3076 | — | A3076 | ANL 76 | — | ALL 76 |
| **80** | 380 | — | 470 | 210 | 52 | 66 | 42.1 | H3080 | — | A3080 | ANL 80 | — | ALL 76 |
| **84** | 400 | — | 490 | 212 | 52 | 66 | 44.3 | H3084 | — | A3084 | ANL 84 | — | ALL 84 |
| **88** | 410 | — | 520 | 228 | 60 | 77 | 67.0 | H3088 | — | A3088 | ANL 88 | — | ALL 88 |
| **92** | 430 | — | 540 | 234 | 60 | 77 | 71.5 | H3092 | — | A3092 | ANL 92 | — | ALL 88 |
| **96** | 450 | — | 560 | 237 | 60 | 77 | 75.2 | H3096 | — | A3096 | ANL 96 | — | ALL 96 |
| **/500** | 470 | — | 580 | 247 | 68 | 85 | 81.8 | H30/500 | — | A30/500 | ANL100 | — | ALL 96 |

Notes: (1) The masses in the table are for H series.
(2) The numbers in the table mean sleeves for H series.
Sleeves for HE series have prefix AE instead of A.
Remark: Suffix X means narrow axial slot type. For this type sleeves, only lockwashers with straight inner tab can be used.





# Adapter Assemblies
## Series H31 / HE31

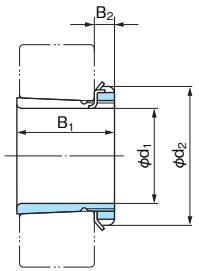


Adapter Ass'y with Lockwasher

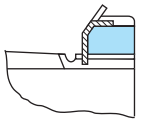

suffix X

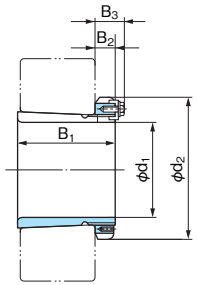


Adapter Ass'y with Lock Plate

| Bearing bore No. | Dimensions (mm) | | | | | | Mass(1) (kg) (reference) | Adapter Ass'y No. | | Part No. | | | |
|---|---|---|---|---|---|---|---|---|---|---|---|---|---|
| | d1 | | d2 | B1 | B2 | B3 | | | | | | | |
| | H | HE | | | | | | H | HE | Adapter(2) sleeve | Locknut | Lockwasher | Lock Plate |
| **22** | 100 | 101.60 | 145 | 81 | 21 | — | 2.25 | H3122X | HE3122X | A3122X | AN 22 | AW 22X | — |
| **24** | 110 | 107.95 | 155 | 88 | 22 | — | 2.64 | H3124X | HE3124X | A3124X | AN 24 | AW 24X | — |
| **26** | 115 | 114.30 | 165 | 92 | 23 | — | 3.66 | H3126 | HE3126 | A3126 | AN 26 | AW 26 | — |
| **28** | 125 | 127.00 | 180 | 97 | 24 | — | 4.34 | H3128 | HE3128 | A3128 | AN 28 | AW 28 | — |
| **30** | 135 | 133.35 | 195 | 111 | 26 | — | 5.54 | H3130 | HE3130 | A3130 | AN 30 | AW 30 | — |
| **32** | 140 | 139.70 | 210 | 119 | 28 | — | 7.70 | H3132 | HE3132 | A3132 | AN 32 | AW 32 | — |
| **34** | 150 | 152.40 | 220 | 122 | 29 | — | 8.40 | H3134 | HE3134 | A3134 | AN 34 | AW 34 | — |
| **36** | 160 | 165.10 | 230 | 131 | 30 | — | 9.50 | H3136 | HE3136 | A3136 | AN 36 | AW 36 | — |
| **38** | 170 | 171.45 | 240 | 141 | 31 | — | 10.8 | H3138 | HE3138 | A3138 | AN 38 | AW 38 | — |
| **40** | 180 | 177.80 | 250 | 150 | 32 | — | 12.1 | H3140 | HE3140 | A3140 | AN 40 | AW 40 | — |
| **44** | 200 | — | 280 | 158 | 32 | 44 | 14.7 | H3144 | — | A3144 | AN 44 | — | AL 44 |
| **48** | 220 | — | 300 | 169 | 34 | 46 | 17.3 | H3148 | — | A3148 | AN 48 | — | AL 44 |
| **52** | 240 | — | 330 | 187 | 36 | 49 | 22.0 | H3152 | — | A3152 | AN 52 | — | AL 52 |
| **56** | 260 | — | 350 | 192 | 38 | 51 | 24.5 | H3156 | — | A3156 | AN 56 | — | AL 52 |
| **60** | 280 | — | 380 | 208 | 40 | 53 | 30.3 | H3160 | — | A3160 | AN 60 | — | AL 60 |
| **64** | 300 | — | 400 | 226 | 42 | 56 | 35.0 | H3164 | — | A3164 | AN 64 | — | AL 64 |
| **68** | 320 | — | 440 | 254 | 55 | 72 | 49.5 | H3168 | — | A3168 | AN 68 | — | AL 68 |
| **72** | 340 | — | 460 | 259 | 58 | 75 | 54.5 | H3172 | — | A3172 | AN 72 | — | AL 68 |
| **76** | 360 | — | 490 | 264 | 60 | 77 | 61.6 | H3176 | — | A3176 | AN 76 | — | AL 76 |
| **80** | 380 | — | 520 | 272 | 62 | 82 | 70.1 | H3180 | — | A3180 | AN 80 | — | AL 80 |
| **84** | 400 | — | 540 | 304 | 70 | 90 | 84.0 | H3184 | — | A3184 | AN 84 | — | AL 80 |
| **88** | 410 | — | 560 | 307 | 70 | 90 | 103 | H3188 | — | A3188 | AN 88 | — | AL 88 |
| **92** | 430 | — | 580 | 326 | 75 | 95 | 116 | H3192 | — | A3192 | AN 92 | — | AL 88 |
| **96** | 450 | — | 620 | 335 | 75 | 95 | 133 | H3196 | — | A3196 | AN 96 | — | AL 96 |
| **/500** | 470 | — | 630 | 356 | 80 | 100 | 143 | H31/500 | — | A31/500 | AN100 | — | AL100 |

Notes: (1) The masses in the table are for H series.
(2) The numbers in the table mean sleeves for H series.
Sleeves for HE series have prefix AE instead of A.
Remark: Suffix X means narrow axial slot type. For this type sleeves, only lockwashers with straight inner tab can be used.

# Adapter Assemblies
## Series H2 / HE2 / HS2

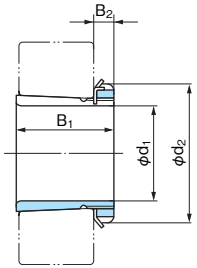


| Bearing bore No. | Dimensions (mm) | | | | | | Mass(1) (kg) (reference) | Adapter Ass'y No. | | | Part No. | | |
|---|---|---|---|---|---|---|---|---|---|---|---|---|---|
| | $d_1$ | | | $d_2$ | $B_1$ | $B_2$ | | | | | | | |
| | H | HE | HS | | | | | H | HE | HS | Adapter(2) sleeve | Locknut | Lockwasher |
| **04** | 17 | — | — | 32 | 24 | 7 | 0.041 | H204X | — | — | A204X | AN 04 | AW 04X |
| **05** | 20 | 19.050 | — | 38 | 26 | 8 | 0.070 | H205X | HE205X | — | A205X | AN 05 | AW 05X |
| **06** | 25 | 25.400 | 22.225 | 45 | 27 | 8 | 0.099 | H206X | HE206X | HS206X | A206X | AN 06 | AW 06X |
| **07** | 30 | — | 28.575 | 52 | 29 | 9 | 0.125 | H207X | — | HS207X | A207X | AN 07 | AW 07X |
| **08** | 35 | 31.750 | 34.925 | 58 | 31 | 10 | 0.174 | H208X | HE208X | HS208X | A208X | AN 08 | AW 08X |
| **09** | 40 | 38.100 | — | 65 | 33 | 11 | 0.226 | H209X | HE209X | — | A209X | AN 09 | AW 09X |
| **10** | 45 | 44.450 | 41.275 | 70 | 35 | 12 | 0.274 | H210X | HE210X | HS210X | A210X | AN 10 | AW 10X |
| **11** | 50 | 50.800 | 47.625 | 75 | 37 | 12 | 0.308 | H211X | HE211X | HS211X | A211X | AN 11 | AW 11X |
| **12** | 55 | — | 53.975 | 80 | 38 | 13 | 0.346 | H212X | — | HS212X | A212X | AN 12 | AW 12X |
| **13** | 60 | 57.150 | 60.325 | 85 | 40 | 14 | 0.401 | H213X | HE213X | HS213X | A213X | AN 13 | AW 13X |
| **14** | 60 | — | — | 92 | 41 | 14 | 0.550 | H214X | — | — | A214X | AN 14 | AW 14X |
| **15** | 65 | 63.500 | 66.675 | 98 | 43 | 15 | 0.708 | H215X | HE215X | HS215X | A215X | AN 15 | AW 15X |
| **16** | 70 | 69.850 | — | 105 | 46 | 17 | 0.881 | H216X | HE216X | — | A216X | AN 16 | AW 16X |
| **17** | 75 | 76.200 | 73.025 | 110 | 50 | 18 | 1.02 | H217X | HE217X | HS217X | A217X | AN 17 | AW 17X |
| **18** | 80 | — | 79.375 | 120 | 52 | 18 | 1.18 | H218X | — | HS218X | A218X | AN 18 | AW 18X |
| **19** | 85 | 82.550 | 85.725 | 125 | 55 | 19 | 1.37 | H219X | HE219X | HS219X | A219X | AN 19 | AW 19X |
| **20** | 90 | 88.900 | — | 130 | 58 | 20 | 1.49 | H220X | HE220X | — | A220X | AN 20 | AW 20X |
| **21** | 95 | — | — | 140 | 60 | 20 | 1.70 | H221X | — | — | A221X | AN 21 | AW 21X |
| **22** | 100 | 101.600 | — | 145 | 63 | 21 | 1.93 | H222X | HE222X | — | A222X | AN 22 | AW 22X |

Notes: (1) The masses in the table are for H series.
(2) The numbers in the table mean sleeves for H series.
Sleeves for HE or HS series have prefix AE or AS.
Remark: Suffix X means narrow axial slot type. For this type sleeves, only lockwashers with straight inner tab can be used.





# Adapter Assemblies
## Series H32

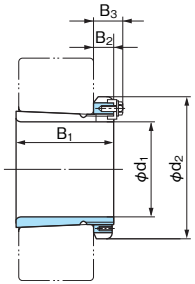


| Bearing bore No. | Dimensions (mm) | | | | | Mass (kg) (reference) | Adapter Ass'y No. | Part No. | | |
|---|---|---|---|---|---|---|---|---|---|---|
| | $d_1$ | $d_2$ | $B_1$ | $B_2$ | $B_3$ | | | Adapter sleeve | Locknut | Lockwasher |
| **60** | 280 | 380 | 240 | 40 | 53 | 34.0 | H3260 | A3260 | AN 60 | AL 60 |
| **64** | 300 | 400 | 258 | 42 | 56 | 39.4 | H3264 | A3264 | AN 64 | AL 64 |
| **68** | 320 | 440 | 288 | 55 | 72 | 54.6 | H3268 | A3268 | AN 68 | AL 68 |
| **72** | 340 | 460 | 299 | 58 | 75 | 60.2 | H3272 | A3272 | AN 72 | AL 68 |
| **76** | 360 | 490 | 310 | 60 | 77 | 69.6 | H3276 | A3276 | AN 76 | AL 76 |
| **80** | 380 | 520 | 328 | 62 | 82 | 80.9 | H3280 | A3280 | AN 80 | AL 80 |
| **84** | 400 | 540 | 352 | 70 | 90 | 94.6 | H3284 | A3284 | AN 84 | AL 80 |
| **88** | 410 | 560 | 361 | 70 | 90 | 118 | H3288 | A3288 | AN 88 | AL 88 |
| **92** | 430 | 580 | 382 | 75 | 95 | 133 | H3292 | A3292 | AN 92 | AL 88 |
| **96** | 450 | 620 | 397 | 75 | 95 | 153 | H3296 | A3296 | AN 96 | AL 96 |
| **/500** | 470 | 630 | 428 | 80 | 100 | 166 | H32/500 | A32/500 | AN100 | AL100 |

# Adapter Assemblies
## Series H3 / HE3 / HS3

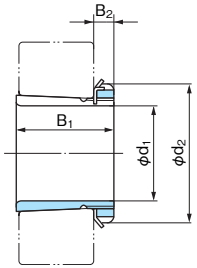


| Bearing bore No. | Dimensions (mm) | | | | | | Mass(1) (kg) (reference) | Adapter Ass'y No. | | | Part No. | | |
|---|---|---|---|---|---|---|---|---|---|---|---|---|---|
| | d1 | | | d2 | B1 | B2 | | | | | | | |
| | H | HE | HS | | | | | H | HE | HS | Adapter(2) sleeve | Locknut | Lockwasher |
| 04 | 17 | — | — | 32 | 28 | 7 | 0.045 | H304X | — | — | A304X | AN 04 | AW 04X |
| 05 | 20 | 19.050 | — | 38 | 29 | 8 | 0.075 | H305X | HE305X | — | A305X | AN 05 | AW 05X |
| 06 | 25 | 25.400 | 22.225 | 45 | 31 | 8 | 0.109 | H306X | HE306X | HS306X | A306X | AN 06 | AW 06X |
| 07 | 30 | — | 28.575 | 52 | 35 | 9 | 0.142 | H307X | — | HS307X | A307X | AN 07 | AW 07X |
| 08 | 35 | 31.750 | 34.925 | 58 | 36 | 10 | 0.189 | H308X | HE308X | HS308X | A308X | AN 08 | AW 08X |
| 09 | 40 | 38.100 | — | 65 | 39 | 11 | 0.248 | H309X | HE309X | — | A309X | AN 09 | AW 09X |
| 10 | 45 | 44.450 | 41.275 | 70 | 42 | 12 | 0.302 | H310X | HE310X | HS310X | A310X | AN 10 | AW 10X |
| 11 | 50 | 50.800 | 47.625 | 75 | 45 | 12 | 0.345 | H311X | HE311X | HS311X | A311X | AN 11 | AW 11X |
| 12 | 55 | — | 53.975 | 80 | 47 | 13 | 0.393 | H312X | — | HS312X | A312X | AN 12 | AW 12X |
| 13 | 60 | 57.150 | 60.325 | 85 | 50 | 14 | 0.459 | H313X | HE313X | HS313X | A313X | AN 13 | AW 13X |
| 14 | 60 | — | — | 92 | 52 | 14 | 0.723 | H314X | — | — | A314X | AN 14 | AW 14X |
| 15 | 65 | 63.500 | 66.675 | 98 | 55 | 15 | 0.830 | H315X | HE315X | HS315X | A315X | AN 15 | AW 15X |
| 16 | 70 | 69.850 | — | 105 | 59 | 17 | 1.03 | H316X | HE316X | — | A316X | AN 16 | AW 16X |
| 17 | 75 | 76.200 | 73.025 | 110 | 63 | 18 | 1.18 | H317X | HE317X | HS317X | A317X | AN 17 | AW 17X |
| 18 | 80 | — | 79.375 | 120 | 65 | 18 | 1.37 | H318X | — | HS318X | A318X | AN 18 | AW 18X |
| 19 | 85 | 82.550 | 85.725 | 125 | 68 | 19 | 1.56 | H319X | HE319X | HS319X | A319X | AN 19 | AW 19X |
| 20 | 90 | 88.900 | — | 130 | 71 | 20 | 1.69 | H320X | HE320X | — | A320X | AN 20 | AW 20X |
| 21 | 95 | — | — | 140 | 74 | 20 | 1.93 | H321X | — | — | A321X | AN 21 | AW 21X |
| 22 | 100 | 101.600 | — | 145 | 77 | 21 | 2.18 | H322X | HE322X | — | A322X | AN 22 | AW 22X |

Notes: (1) The masses in the table are for H series.
(2) The numbers in the table mean sleeves for H series.
Sleeves for HE or HS series have prefix AE or AS.
Remark: Suffix X means narrow axial slot type. For this type sleeves, only lockwashers with straight inner tab can be used.





# Adapter Assemblies
## Series H23 / HE23

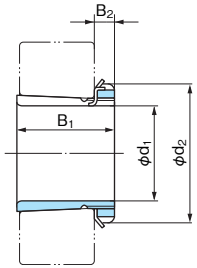


Adapter Ass'y with Lockwasher

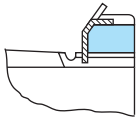

suffix X

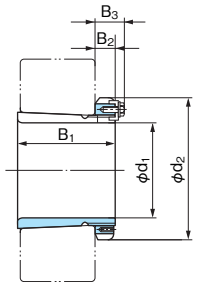


Adapter Ass'y with Lock Plate

| Bearing bore No. | Dimensions (mm) | | | | | | Mass(1) (kg) (reference) | Adapter Ass'y No. | | Part No. | | | |
|---|---|---|---|---|---|---|---|---|---|---|---|---|---|
| | d1 | | d2 | B1 | B2 | B3 | | | | | | | |
| | H | HE | | | | | | H | HE | Adapter(2) sleeve | Locknut | Lockwasher | Lock Plate |
| 04 | 17 | — | 32 | 31 | 7 | — | 0.049 | H2304X | — | A2304X | AN 04 | AW 04X | — |
| 05 | 20 | 19.05 | 38 | 35 | 8 | — | 0.087 | H2305X | HE2305X | A2305X | AN 05 | AW 05X | — |
| 06 | 25 | 25.40 | 45 | 38 | 8 | — | 0.126 | H2306X | HE2306X | A2306X | AN 06 | AW 06X | — |
| 07 | 30 | — | 52 | 43 | 9 | — | 0.165 | H2307X | — | A2307X | AN 07 | AW 07X | — |
| 08 | 35 | 31.75 | 58 | 46 | 10 | — | 0.224 | H2308X | HE2308X | A2308X | AN 08 | AW 08X | — |
| 09 | 40 | 38.10 | 65 | 50 | 11 | — | 0.280 | H2309X | HE2309X | A2309X | AN 09 | AW 09X | — |
| 10 | 45 | 44.45 | 70 | 55 | 12 | — | 0.362 | H2310X | HE2310X | A2310X | AN 10 | AW 10X | — |
| 11 | 50 | 50.80 | 75 | 59 | 12 | — | 0.420 | H2311X | HE2311X | A2311X | AN 11 | AW 11X | — |
| 12 | 55 | — | 80 | 62 | 13 | — | 0.480 | H2312X | — | A2312X | AN 12 | AW 12X | — |
| 13 | 60 | 57.15 | 85 | 65 | 14 | — | 0.556 | H2313X | HE2313X | A2313X | AN 13 | AW 13X | — |
| 14 | 60 | — | 92 | 68 | 14 | — | 0.897 | H2314X | — | A2314X | AN 14 | AW 14X | — |
| 15 | 65 | 63.50 | 98 | 73 | 15 | — | 1.05 | H2315X | HE2315X | A2315X | AN 15 | AW 15X | — |
| 16 | 70 | 69.85 | 105 | 78 | 17 | — | 1.28 | H2316X | HE2316X | A2316X | AN 16 | AW 16X | — |
| 17 | 75 | 76.20 | 110 | 82 | 18 | — | 1.45 | H2317X | HE2317X | A2317X | AN 17 | AW 17X | — |
| 18 | 80 | — | 120 | 86 | 18 | — | 1.70 | H2318X | — | A2318X | AN 18 | AW 18X | — |
| 19 | 85 | 82.55 | 125 | 90 | 19 | — | 1.94 | H2319X | HE2319X | A2319X | AN 19 | AW 19X | — |
| 20 | 90 | 88.90 | 130 | 97 | 20 | — | 2.15 | H2320X | HE2320X | A2320X | AN 20 | AW 20X | — |
| 21 | 95 | — | 140 | 101 | 20 | — | 2.45 | H2321X | — | A2321X | AN 21 | AW 21X | — |
| 22 | 100 | 101.60 | 145 | 105 | 21 | — | 2.74 | H2322X | HE2322X | A2322X | AN 22 | AW 22X | — |
| 24 | 110 | 107.95 | 155 | 112 | 22 | — | 3.20 | H2324X | HE2324X | A2324X | AN 24 | AW 24X | — |
| 26 | 115 | 114.30 | 165 | 121 | 23 | — | 4.60 | H2326 | HE2326 | A2326 | AN 26 | AW 26 | — |
| 28 | 125 | 127.00 | 180 | 131 | 24 | — | 5.52 | H2328 | HE2328 | A2328 | AN 28 | AW 28 | — |
| 30 | 135 | 133.35 | 195 | 139 | 26 | — | 6.60 | H2330 | HE2330 | A2330 | AN 30 | AW 30 | — |
| 32 | 140 | 139.70 | 210 | 147 | 28 | — | 9.15 | H2332 | HE2332 | A2332 | AN 32 | AW 32 | — |
| 34 | 150 | 152.40 | 220 | 154 | 29 | — | 10.4 | H2334 | HE2334 | A2334 | AN 34 | AW 34 | — |
| 36 | 160 | 165.10 | 230 | 161 | 30 | — | 11.3 | H2336 | HE2336 | A2336 | AN 36 | AW 36 | — |
| 38 | 170 | 171.45 | 240 | 169 | 31 | — | 12.6 | H2338 | HE2338 | A2338 | AN 38 | AW 38 | — |
| 40 | 180 | 177.80 | 250 | 176 | 32 | — | 13.9 | H2340 | HE2340 | A2340 | AN 40 | AW 40 | — |
| 44 | 200 | — | 280 | 183 | 32 | 44 | 16.6 | H2344 | — | A2344 | AN 44 | — | AL 44 |
| 48 | 220 | — | 300 | 196 | 34 | 46 | 19.7 | H2348 | — | A2348 | AN 48 | — | AL 44 |
| 52 | 240 | — | 330 | 208 | 36 | 49 | 24.2 | H2352 | — | A2352 | AN 52 | — | AL 52 |
| 56 | 260 | — | 350 | 221 | 38 | 51 | 27.8 | H2356 | — | A2356 | AN 56 | — | AL 52 |

Notes: (1) The masses in the table are for H series.
(2) The numbers in the table mean sleeves for H series.
Sleeves for HE series have prefix AE instead of A.
Remarks: 1. Suffix X means narrow axial slot type. For this type sleeves, only lockwashers with straight inner tab can be used.
2. Inch bore type HS series is also available.

# Withdrawal Sleeves
## Series AH30 / AHX30

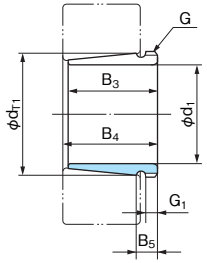


| Bearing bore No. | Thread Nominal G | Dimensions (mm) | | | | | | Mass (kg) (reference) | Withdrawal Sleeve No. | Locknut No. |
|---|---|---|---|---|---|---|---|---|---|---|
| | | $d_1$ | $B_3$ | $B_4$ | $dT_1$ | $B_5$ | $G_1$ | | | |
| **24** | M 130×2 | 115 | 60 | 64 | 124.00 | 16 | 13 | 0.75 | AHX3024 | AN 26 |
| **26** | M 140×2 | 125 | 67 | 71 | 134.50 | 17 | 14 | 0.93 | AHX3026 | AN 28 |
| **28** | M 150×2 | 135 | 68 | 73 | 144.67 | 17 | 14 | 1.01 | AHX3028 | AN 30 |
| **30** | M 160×3 | 145 | 72 | 77 | 154.92 | 18 | 15 | 1.15 | AHX3030 | AN 32 |
| **32** | M 170×3 | 150 | 77 | 82 | 165.25 | 19 | 16 | 2.10 | AH 3032 | AN 34 |
| **34** | M 180×3 | 160 | 85 | 90 | 175.83 | 20 | 17 | 2.50 | AH 3034 | AN 36 |
| **36** | M 190×3 | 170 | 92 | 98 | 186.08 | 25 | 17 | 2.90 | AH 3036 | AN 38 |
| **38** | Tr 205×4 | 180 | 96 | 102 | 196.50 | 24 | 18 | 3.40 | AH 3038 | HNL 41 |
| **40** | Tr 215×4 | 190 | 102 | 108 | 206.92 | 25 | 19 | 3.80 | AH 3040 | HNL 43 |
| **44** | Tr 235×4 | 200 | 111 | 117 | 227.58 | 26 | 20 | 7.40 | AH 3044 | HNL 47 |
| **48** | Tr 260×4 | 220 | 116 | 123 | 248.00 | 27 | 21 | 8.80 | AH 3048 | HNL 52 |
| **52** | Tr 280×4 | 240 | 128 | 135 | 268.83 | 29 | 23 | 10.7 | AH 3052 | HNL 56 |
| **56** | Tr 300×4 | 260 | 131 | 139 | 289.08 | 30 | 24 | 12.0 | AH 3056 | HNL 60 |
| **60** | Tr 320×5 | 280 | 145 | 153 | 310.08 | 32 | 26 | 14.4 | AH 3060 | HNL 64 |
| **64** | Tr 345×5 | 300 | 149 | 157 | 330.33 | 33 | 27 | 16.0 | AH 3064 | HNL 69 |
| **68** | Tr 365×5 | 320 | 162 | 171 | 351.42 | 34 | 28 | 19.5 | AH 3068 | HNL 73 |
| **72** | Tr 385×5 | 340 | 167 | 176 | 371.67 | 36 | 30 | 21.0 | AH 3072 | HNL 77 |
| **76** | Tr 410×5 | 360 | 170 | 180 | 391.92 | 37 | 31 | 23.5 | AH 3076 | HNL 82 |
| **80** | Tr 430×5 | 380 | 183 | 193 | 412.83 | 39 | 33 | 27.2 | AH 3080 | HNL 86 |
| **84** | Tr 450×5 | 400 | 186 | 196 | 433.00 | 40 | 34 | 29.1 | AH 3084 | HNL 90 |
| **88** | Tr 470×5 | 420 | 194 | 205 | 453.67 | 41 | 35 | 32.1 | AHX3088 | HNL 94 |
| **92** | Tr 490×5 | 440 | 202 | 213 | 474.17 | 43 | 37 | 35.3 | AHX3092 | HNL 98 |
| **96** | Tr 520×6 | 460 | 205 | 217 | 494.42 | 44 | 38 | 40.0 | AHX3096 | HNL104 |
| **/500** | Tr 540×6 | 480 | 209 | 221 | 514.58 | 46 | 40 | 42.5 | AHX30/500 | HNL108 |





# Withdrawal Sleeves
## Series AH30 / AHX30

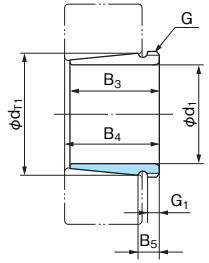


| Bearing bore No. | Thread Nominal G | Dimensions (mm) | | | | | | Mass (kg) (reference) | Withdrawal Sleeve No. | Locknut No. |
|---|---|---|---|---|---|---|---|---|---|---|
| | | $d_1$ | $B_3$ | $B_4$ | $dT_1$ | $B_5$ | $G_1$ | | | |
| **22** | M 120×2 | 105 | 68 | 72 | 114.83 | 14 | 11 | 0.76 | AHX3122 | AN 24 |
| **24** | M 130×2 | 115 | 75 | 79 | 125.33 | 15 | 12 | 0.95 | AHX3124 | AN 26 |
| **26** | M 140×2 | 125 | 78 | 82 | 135.58 | 15 | 12 | 1.08 | AHX3126 | AN 28 |
| **28** | M 150×2 | 135 | 83 | 88 | 145.92 | 17 | 14 | 1.28 | AHX3128 | AN 30 |
| **30** | M 165×3 | 145 | 96 | 101 | 156.92 | 18 | 15 | 1.79 | AHX3130 | AN 33 |
| **32** | M 180×3 | 150 | 103 | 108 | 167.42 | 19 | 16 | 3.20 | AH 3132 | AN 36 |
| **34** | M 190×3 | 160 | 104 | 109 | 177.50 | 19 | 16 | 3.50 | AH 3134 | AN 38 |
| **36** | M 200×3 | 170 | 116 | 122 | 188.33 | 22 | 19 | 4.20 | AH 3136 | AN 40 |
| **38** | Tr 210×4 | 180 | 125 | 131 | 198.75 | 26 | 20 | 4.90 | AH 3138 | HN 42 |
| **40** | Tr 220×4 | 190 | 134 | 140 | 209.42 | 27 | 21 | 5.60 | AH 3140 | HN 44 |
| **44** | Tr 240×4 | 200 | 145 | 151 | 230.17 | 29 | 23 | 10.4 | AH 3144 | HN 48 |
| **48** | Tr 260×4 | 220 | 154 | 161 | 250.83 | 31 | 25 | 12.1 | AH 3148 | HN 52 |
| **52** | Tr 290×4 | 240 | 172 | 179 | 272.25 | 32 | 26 | 16.2 | AH 3152 | HN 58 |
| **56** | Tr 310×5 | 260 | 175 | 183 | 292.42 | 34 | 28 | 17.6 | AH 3156 | HN 62 |
| **60** | Tr 330×5 | 280 | 192 | 200 | 313.67 | 36 | 30 | 21.0 | AH 3160 | HN 66 |
| **64** | Tr 350×5 | 300 | 209 | 217 | 335.00 | 37 | 31 | 24.7 | AH 3164 | HN 70 |
| **68** | Tr 370×5 | 320 | 225 | 234 | 356.25 | 39 | 33 | 29.0 | AH 3168 | HN 74 |
| **72** | Tr 400×5 | 340 | 229 | 238 | 376.42 | 41 | 35 | 33.1 | AH 3172 | HN 80 |
| **76** | Tr 420×5 | 360 | 232 | 242 | 396.67 | 42 | 36 | 35.8 | AH 3176 | HN 84 |
| **80** | Tr 440×5 | 380 | 240 | 250 | 417.17 | 44 | 38 | 38.9 | AH 3180 | HN 88 |
| **84** | Tr 460×5 | 400 | 266 | 276 | 439.17 | 46 | 40 | 46.0 | AH 3184 | HN 92 |
| **88** | Tr 480×5 | 420 | 270 | 281 | 459.42 | 48 | 42 | 49.2 | AHX3188 | HN 96 |
| **92** | Tr 510×6 | 440 | 285 | 296 | 480.58 | 49 | 43 | 57.7 | AHX3192 | HN102 |
| **96** | Tr 530×6 | 460 | 295 | 307 | 501.33 | 51 | 45 | 63.1 | AHX3196 | HN106 |
| **/500** | Tr 550×6 | 480 | 313 | 325 | 522.67 | 53 | 47 | 70.9 | AHX31/500 | HN110 |

# Withdrawal Sleeves
## Series AH2

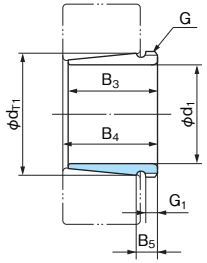


| Bearing bore No. | Thread Nominal G | Dimensions (mm) | | | | | | Mass (kg) (reference) | Withdrawal Sleeve No. | Locknut No. |
|---|---|---|---|---|---|---|---|---|---|---|
| | | $d_1$ | $B_3$ | $B_4$ | $dT_1$ | $B_5$ | $G_1$ (reference) | | | |
| 08 | M 45×1.5 | 35 | 25 | 27 | 41.50 | 9 | 6 | 0.094 | AH 208 | AN 09 |
| 09 | M 50×1.5 | 40 | 26 | 29 | 46.67 | 9 | 6 | 0.104 | AH 209 | AN 10 |
| 10 | M 55×2 | 45 | 28 | 31 | 51.15 | 10 | 7 | 0.130 | AH 210 | AN 11 |
| 11 | M 60×2 | 50 | 29 | 32 | 56.83 | 10 | 7 | 0.167 | AH 211 | AN 12 |
| 12 | M 65×2 | 55 | 32 | 35 | 62.00 | 11 | 8 | 0.175 | AH 212 | AN 13 |
| 13 | M 75×2 | 60 | 32.5 | 36 | 67.08 | 11 | 8 | 0.242 | AH 213 | AN 15 |
| 14 | M 80×2 | 65 | 33.5 | 37 | 72.17 | 11 | 8 | 0.255 | AH 214 | AN 16 |
| 15 | M 85×2 | 70 | 34.5 | 38 | 77.25 | 11 | 8 | 0.280 | AH 215 | AN 17 |
| 16 | M 90×2 | 75 | 35.5 | 39 | 82.33 | 11 | 8 | 0.306 | AH 216 | AN 18 |
| 17 | M 95×2 | 80 | 38.5 | 42 | 87.50 | 12 | 9 | 0.353 | AH 217 | AN 19 |
| 18 | M 100×2 | 85 | 40 | 44 | 92.67 | 12 | 9 | 0.427 | AH 218 | AN 20 |
| 19 | M 105×2 | 90 | 43 | 47 | 97.83 | 13 | 10 | 0.486 | AH 219 | AN 21 |
| 20 | M 110×2 | 95 | 45 | 49 | 103.00 | 13 | 10 | 0.525 | AH 220 | AN 22 |
| 21 | M 115×2 | 100 | 47 | 51 | 108.08 | 14 | 11 | 0.580 | AH 221 | AN 23 |
| 22 | M 120×2 | 105 | 50 | 54 | 113.33 | 14 | 11 | 0.647 | AH 222 | AN 24 |
| 24 | M 130×2 | 115 | 53 | 57 | 123.50 | 15 | 12 | 0.755 | AH 224 | AN 26 |
| 26 | M 140×2 | 125 | 53 | 57 | 133.50 | 15 | 12 | 0.815 | AH 226 | AN 28 |
| 28 | M 150×2 | 135 | 56 | 61 | 143.75 | 16 | 13 | 1.00 | AH 228 | AN 30 |
| 30 | M 160×3 | 145 | 60 | 65 | 154.00 | 17 | 14 | 1.16 | AH 230 | AN 32 |
| 32 | M 170×3 | 150 | 64 | 69 | 164.25 | 18 | 15 | 1.91 | AH 232 | AN 34 |
| 34 | M 180×3 | 160 | 69 | 74 | 174.58 | 19 | 16 | 2.21 | AH 234 | AN 36 |
| 36 | M 190×3 | 170 | 69 | 74 | 184.58 | 19 | 16 | 2.34 | AH 236 | AN 38 |
| 38 | Tr 205×4 | 180 | 73 | 78 | 194.58 | 23 | 17 | 2.94 | AH 238 | HNL41 |
| 40 | Tr 215×4 | 190 | 77 | 82 | 204.83 | 24 | 18 | 3.12 | AH 240 | HNL43 |
| 44 | Tr 235×4 | 200 | 85 | 91 | 225.58 | 24 | 18 | 6.10 | AH 244 | HNL47 |
| 48 | Tr 260×4 | 220 | 96 | 102 | 246.17 | 28 | 22 | 8.16 | AH 248 | HNL52 |
| 52 | Tr 280×4 | 240 | 105 | 111 | 266.83 | 29 | 23 | 9.89 | AH 252 | HNL56 |
| 56 | Tr 300×4 | 260 | 105 | 113 | 287.00 | 29 | 23 | 10.4 | AH 256 | HNL60 |





# Withdrawal Sleeves
## Series AH22 / AH32 / AHX32

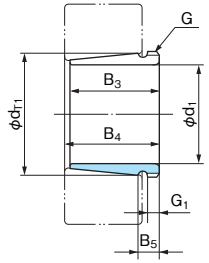


| Bearing bore No. | Thread Nominal G | Dimensions (mm) | | | | | | Mass (kg) (reference) | Withdrawal Sleeve No. | Locknut No. |
|---|---|---|---|---|---|---|---|---|---|---|
| | | $d_1$ | $B_3$ | $B_4$ | $dT_1$ | $B_5$ | $G_1$ (reference) | | | |
| 36 | M 200×3 | 170 | 105 | 110 | 187.50 | 20 | 17 | 3.70 | AH 2236 | AN 40 |
| 38 | Tr 210×4 | 180 | 112 | 117 | 197.75 | 24 | 18 | 4.30 | AH 2238 | HN 42 |
| 40 | Tr 220×4 | 190 | 118 | 123 | 208.17 | 25 | 19 | 4.70 | AH 2240 | HN 44 |
| 44 | Tr 240×4 | 200 | 130 | 136 | 229.17 | 26 | 20 | 9.20 | AH 2244 | HN 48 |
| 48 | Tr 260×4 | 220 | 144 | 150 | 250.25 | 27 | 21 | 11.1 | AH 2248 | HN 52 |
| 52 | Tr 290×4 | 240 | 155 | 161 | 271.00 | 29 | 23 | 14.0 | AH 2252 | HN 58 |
| 56 | Tr 310×5 | 260 | 155 | 163 | 291.08 | 30 | 24 | 15.2 | AH 2256 | HN 62 |
| 60 | Tr 330×5 | 280 | 170 | 178 | 312.17 | 32 | 26 | 18.1 | AH 2260 | HN 66 |
| 64 | Tr 350×5 | 300 | 180 | 190 | 333.08 | 33 | 27 | 20.2 | AH 2264 | HN 70 |
| 18 | M 100×2 | 85 | 63 | 67 | 94.50 | 13 | 10 | 0.576 | AHX3218 | AN 20 |
| 19 | M 105×2 | 90 | 67 | 71 | 99.75 | 14 | 11 | 0.680 | AH 3219 | AN 21 |
| 20 | M 110×2 | 95 | 73 | 77 | 105.25 | 14 | 11 | 0.767 | AHX3220 | AN 22 |
| 21 | M 115×2 | 100 | 78 | 82 | 110.67 | 14 | 11 | 0.890 | AH 3221 | AN 23 |
| 22 | M 125×2 | 105 | 82 | 86 | 116.00 | 14 | 11 | 1.04 | AHX3222 | AN 25 |
| 24 | M 135×2 | 115 | 90 | 94 | 126.50 | 16 | 13 | 1.30 | AHX3224 | AN 27 |
| 26 | M 145×2 | 125 | 98 | 102 | 137.00 | 18 | 15 | 1.60 | AHX3226 | AN 29 |
| 28 | M 155×3 | 135 | 104 | 109 | 147.58 | 18 | 15 | 1.90 | AHX3228 | AN 31 |
| 30 | M 165×3 | 145 | 114 | 119 | 158.25 | 20 | 17 | 2.30 | AHX3230 | AN 33 |
| 32 | M 180×3 | 150 | 124 | 130 | 168.92 | 23 | 20 | 4.09 | AH 3232 | AN 36 |
| 34 | M 190×3 | 160 | 134 | 140 | 179.42 | 27 | 24 | 4.81 | AH 3234 | AN 38 |
| 36 | M 200×3 | 170 | 140 | 146 | 189.92 | 27 | 24 | 5.31 | AH 3236 | AN 40 |
| 38 | Tr 210×4 | 180 | 145 | 152 | 200.08 | 31 | 25 | 5.90 | AH 3238 | AN 42 |
| 40 | Tr 220×4 | 190 | 153 | 160 | 210.75 | 31 | 25 | 6.67 | AH 3240 | AN 44 |
| 60 | Tr 330×5 | 280 | 228 | 236 | 316.33 | 40 | 34 | 26.0 | AH 3260 | HN 66 |
| 64 | Tr 350×5 | 300 | 246 | 254 | 337.67 | 42 | 36 | 30.6 | AH 3264 | HN 70 |
| 68 | Tr 370×5 | 320 | 264 | 273 | 359.08 | 44 | 38 | 35.8 | AH 3268 | HN 74 |
| 72 | Tr 400×5 | 340 | 274 | 283 | 379.75 | 46 | 40 | 41.6 | AH 3272 | HN 80 |
| 76 | Tr 420×5 | 360 | 284 | 294 | 400.50 | 48 | 42 | 46.3 | AH 3276 | HN 84 |
| 80 | Tr 440×5 | 380 | 302 | 312 | 421.83 | 50 | 44 | 52.5 | AH 3280 | HN 88 |
| 84 | Tr 460×5 | 400 | 321 | 331 | 443.25 | 52 | 46 | 59.4 | AH 3284 | HN 92 |
| 88 | Tr 480×5 | 420 | 330 | 341 | 463.92 | 54 | 48 | 64.7 | AHX3288 | HN 96 |
| 92 | Tr 510×6 | 440 | 349 | 360 | 485.33 | 56 | 50 | 75.6 | AHX3292 | HN102 |
| 96 | Tr 530×6 | 460 | 364 | 376 | 506.50 | 58 | 52 | 83.6 | AHX3296 | HN106 |
| /500 | Tr 550×6 | 480 | 393 | 405 | 528.75 | 60 | 54 | 94.7 | AHX32/500 | HN110 |

# Withdrawal Sleeves
## Series AH3 / AHX30

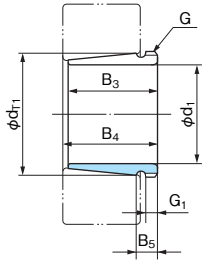


| Bearing bore No. | Thread Nominal G | Dimensions (mm) | | | | | | Mass (kg) (reference) | Withdrawal Sleeve No. | Locknut No. |
|---|---|---|---|---|---|---|---|---|---|---|
| | | $d_1$ | $B_3$ | $B_4$ | $dT_1$ | $B_5$ | $G_1$ (reference) | | | |
| **08** | M 45×1.5 | 35 | 29 | 32 | 41.92 | 9 | 6 | 0.096 | AH 308 | AN 09 |
| **09** | M 50×1.5 | 40 | 31 | 34 | 47.08 | 9 | 6 | 0.109 | AH 309 | AN 10 |
| **10** | M 55×2 | 45 | 35 | 38 | 52.33 | 10 | 7 | 0.137 | AHX310 | AN 11 |
| **11** | M 60×2 | 50 | 37 | 40 | 57.38 | 11.5 | 7 | 0.161 | AHX311 | AN 12 |
| **12** | M 65×2 | 55 | 40 | 43 | 62.38 | 14.5 | 8 | 0.189 | AHX312 | AN 13 |
| **13** | M 75×2 | 60 | 42 | 45 | 67.83 | 11 | 8 | 0.253 | AH 313 | AN 15 |
| **14** | M 80×2 | 65 | 43 | 47 | 73.00 | 11 | 8 | 0.280 | AH 314 | AN 16 |
| **15** | M 85×2 | 70 | 45 | 49 | 78.17 | 11 | 8 | 0.313 | AH 315 | AN 17 |
| **16** | M 90×2 | 75 | 48 | 52 | 83.42 | 11 | 8 | 0.365 | AH 316 | AN 18 |
| **17** | M 95×2 | 80 | 52 | 56 | 88.67 | 12 | 9 | 0.429 | AHX317 | AN 19 |
| **18** | M 100×2 | 85 | 53 | 57 | 93.75 | 12 | 9 | 0.461 | AHX318 | AN 20 |
| **19** | M 105×2 | 90 | 57 | 61 | 99.00 | 13 | 10 | 0.532 | AHX319 | AN 21 |
| **20** | M 110×2 | 95 | 59 | 63 | 104.17 | 13 | 10 | 0.582 | AHX320 | AN 22 |
| **21** | M 115×2 | 100 | 62 | 66 | 109.25 | 15 | 12 | 0.600 | AHX321 | AN 23 |
| **22** | M 120×2 | 105 | 63 | 67 | 114.33 | 15 | 12 | 0.663 | AHX322 | AN 24 |
| **24** | M 130×2 | 115 | 69 | 73 | 124.75 | 16 | 13 | 0.875 | AHX324 | AN 26 |
| **26** | M 140×2 | 125 | 74 | 78 | 135.08 | 17 | 14 | 1.03 | AHX326 | AN 28 |
| **28** | M 150×2 | 135 | 77 | 82 | 145.42 | 17 | 14 | 1.15 | AHX328 | AN 30 |
| **30** | M 165×3 | 145 | 83 | 88 | 155.83 | 18 | 15 | 1.55 | AHX330 | AN 33 |
| **32** | M 180×3 | 150 | 88 | 93 | 166.17 | 19 | 16 | 2.73 | AH 332 | AN 36 |
| **34** | M 190×3 | 160 | 93 | 98 | 176.50 | 20 | 17 | 3.19 | AH 334 | AN 38 |





# Withdrawal Sleeves
## Series AH23 / AHX23

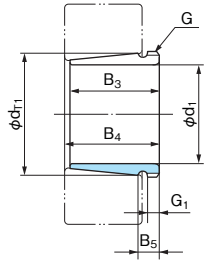


| Bearing bore No. | Thread Nominal G | Dimensions (mm) | | | | | | Mass (kg) (reference) | Withdrawal Sleeve No. | Locknut No. |
|---|---|---|---|---|---|---|---|---|---|---|
| | | $d_1$ | $B_3$ | $B_4$ | $dT_1$ | $B_5$ | $G_1$ (reference) | | | |
| **08** | M 45×1.5 | 35 | 40 | 43 | 42.75 | 10 | 7 | 0.128 | AH 2308 | AN 09 |
| **09** | M 50×1.5 | 40 | 44 | 47 | 48.00 | 11 | 7 | 0.164 | AH 2309 | AN 10 |
| **10** | M 55×2 | 45 | 50 | 53 | 53.17 | 15 | 9 | 0.209 | AHX2310 | AN 11 |
| **11** | M 60×2 | 50 | 54 | 57 | 58.42 | 16 | 10 | 0.253 | AHX2311 | AN 12 |
| **12** | M 65×2 | 55 | 58 | 61 | 63.63 | 17.5 | 11 | 0.297 | AHX2312 | AN 13 |
| **13** | M 75×2 | 60 | 61 | 64 | 69.08 | 15 | 12 | 0.395 | AH 2313 | AN 15 |
| **14** | M 80×2 | 65 | 64 | 68 | 74.42 | 15 | 12 | 0.466 | AHX2314 | AN 16 |
| **15** | M 85×2 | 70 | 68 | 72 | 79.75 | 15 | 12 | 0.534 | AHX2315 | AN 17 |
| **16** | M 90×2 | 75 | 71 | 75 | 85.00 | 15 | 12 | 0.597 | AHX2316 | AN 18 |
| **17** | M 95×2 | 80 | 74 | 78 | 90.17 | 16 | 13 | 0.670 | AHX2317 | AN 19 |
| **18** | M 100×2 | 85 | 79 | 83 | 95.50 | 17 | 14 | 0.779 | AHX2318 | AN 20 |
| **19** | M 105×2 | 90 | 85 | 89 | 100.83 | 19 | 16 | 0.886 | AHX2319 | AN 21 |
| **20** | M 110×2 | 95 | 90 | 94 | 106.25 | 19 | 16 | 0.988 | AHX2320 | AN 22 |
| **21** | — | — | — | — | — | — | — | — | — | — |
| **22** | M 125×2 | 105 | 98 | 102 | 116.92 | 19 | 16 | 1.35 | AHX2322 | AN 25 |
| **24** | M 135×2 | 115 | 105 | 109 | 127.42 | 20 | 17 | 1.60 | AHX2324 | AN 27 |
| **26** | M 145×2 | 125 | 115 | 119 | 138.08 | 22 | 19 | 2.00 | AHX2326 | AN 29 |
| **28** | M 155×3 | 135 | 125 | 130 | 148.92 | 23 | 20 | 2.33 | AHX2328 | AN 31 |
| **30** | M 165×3 | 145 | 135 | 140 | 159.42 | 27 | 24 | 2.82 | AHX2330 | AN 33 |
| **32** | M 180×3 | 150 | 140 | 146 | 169.92 | 27 | 24 | 4.70 | AH 2332 | AN 36 |
| **34** | M 190×3 | 160 | 146 | 152 | 180.42 | 27 | 24 | 5.30 | AH 2334 | AN 38 |
| **36** | M 200×3 | 170 | 154 | 160 | 190.92 | 29 | 26 | 5.90 | AH 2336 | AN 40 |
| **38** | Tr 210×4 | 180 | 160 | 167 | 201.25 | 32 | 26 | 6.50 | AH 2338 | HN 42 |
| **40** | Tr 220×4 | 190 | 170 | 177 | 211.75 | 36 | 30 | 7.50 | AH 2340 | HN 44 |
| **44** | Tr 240×4 | 200 | 181 | 189 | 232.75 | 36 | 30 | 13.4 | AH 2344 | HN 48 |
| **48** | Tr 260×4 | 220 | 189 | 197 | 253.42 | 36 | 30 | 15.5 | AH 2348 | HN 52 |
| **52** | Tr 290×4 | 240 | 205 | 213 | 274.75 | 36 | 30 | 20.0 | AH 2352 | HN 58 |
| **56** | Tr 310×5 | 260 | 212 | 220 | 295.33 | 36 | 30 | 21.5 | AH 2356 | HN 62 |

# Locknuts
## Series AN / ANL

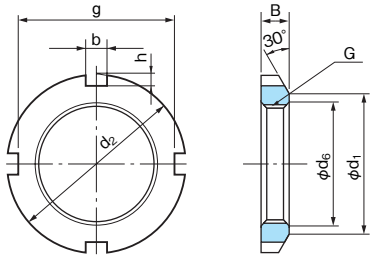


| No. | Thread Nominal G | Dimensions (mm) | | | | | | | Mass (kg) (reference) | Lockwasher No. |
|---|---|---|---|---|---|---|---|---|---|---|
| | | $d_1$ | $d_2$ | B | b | h | g | $d_6$ | | |
| **AN 02** | M 15×1 | 21 | 25 | 5 | 4 | 2 | 21 | 15.5 | 0.010 | AW 02 |
| **AN 03** | M 17×1 | 24 | 28 | 5 | 4 | 2 | 24 | 17.5 | 0.013 | AW 03 |
| **AN 04** | M 20×1 | 26 | 32 | 6 | 4 | 2 | 28 | 20.5 | 0.019 | AW 04 |
| **AN 05** | M 25×1.5 | 32 | 38 | 7 | 5 | 2 | 34 | 25.8 | 0.025 | AW 05 |
| **AN 06** | M 30×1.5 | 38 | 45 | 7 | 5 | 2 | 41 | 30.8 | 0.043 | AW 06 |
| **AN 07** | M 35×1.5 | 44 | 52 | 8 | 5 | 2 | 48 | 35.8 | 0.053 | AW 07 |
| **AN 08** | M 40×1.5 | 50 | 58 | 9 | 6 | 2.5 | 53 | 40.8 | 0.085 | AW 08 |
| **AN 09** | M 45×1.5 | 56 | 65 | 10 | 6 | 2.5 | 60 | 45.8 | 0.119 | AW 09 |
| **AN 10** | M 50×1.5 | 61 | 70 | 11 | 6 | 2.5 | 65 | 50.8 | 0.148 | AW 10 |
| **AN 11** | M 55×2 | 67 | 75 | 11 | 7 | 3 | 69 | 56 | 0.158 | AW 11 |
| **AN 12** | M 60×2 | 73 | 80 | 11 | 7 | 3 | 74 | 61 | 0.174 | AW 12 |
| **AN 13** | M 65×2 | 79 | 85 | 12 | 7 | 3 | 79 | 66 | 0.203 | AW 13 |
| **AN 14** | M 70×2 | 85 | 92 | 12 | 8 | 3.5 | 85 | 71 | 0.242 | AW 14 |
| **AN 15** | M 75×2 | 90 | 98 | 13 | 8 | 3.5 | 91 | 76 | 0.287 | AW 15 |
| **AN 16** | M 80×2 | 95 | 105 | 15 | 8 | 3.5 | 98 | 81 | 0.397 | AW 16 |
| **AN 17** | M 85×2 | 102 | 110 | 16 | 8 | 3.5 | 103 | 86 | 0.451 | AW 17 |
| **AN 18** | M 90×2 | 108 | 120 | 16 | 10 | 4 | 112 | 91 | 0.556 | AW 18 |
| **AN 19** | M 95×2 | 113 | 125 | 17 | 10 | 4 | 117 | 96 | 0.658 | AW 19 |
| **AN 20** | M 100×2 | 120 | 130 | 18 | 10 | 4 | 122 | 101 | 0.698 | AW 20 |
| **AN 21** | M 105×2 | 126 | 140 | 18 | 12 | 5 | 130 | 106 | 0.845 | AW 21 |
| **AN 22** | M 110×2 | 133 | 145 | 19 | 12 | 5 | 135 | 111 | 0.965 | AW 22 |
| **AN 23** | M 115×2 | 137 | 150 | 19 | 12 | 5 | 140 | 116 | 1.01 | AW 23 |
| **AN 24** | M 120×2 | 138 | 155 | 20 | 12 | 5 | 145 | 121 | 1.08 | AW 24 |
| **AN 25** | M 125×2 | 148 | 160 | 21 | 12 | 5 | 150 | 126 | 1.19 | AW 25 |
| **AN 26** | M 130×2 | 149 | 165 | 21 | 12 | 5 | 155 | 131 | 1.25 | AW 26 |
| **AN 27** | M 135×2 | 160 | 175 | 22 | 14 | 6 | 163 | 136 | 1.55 | AW 27 |
| **AN 28** | M 140×2 | 160 | 180 | 22 | 14 | 6 | 168 | 141 | 1.56 | AW 28 |
| **AN 29** | M 145×2 | 171 | 190 | 24 | 14 | 6 | 178 | 146 | 2.00 | AW 29 |
| **AN 30** | M 150×2 | 171 | 195 | 24 | 14 | 6 | 183 | 151 | 2.03 | AW 30 |
| **AN 31** | M 155×3 | 182 | 200 | 25 | 16 | 7 | 186 | 156.5 | 2.21 | AW 31 |
| **AN 32** | M 160×3 | 182 | 210 | 25 | 16 | 7 | 196 | 161.5 | 2.59 | AW 32 |
| **AN 33** | M 165×3 | 193 | 210 | 26 | 16 | 7 | 196 | 166.5 | 2.43 | AW 33 |
| **AN 34** | M 170×3 | 193 | 220 | 26 | 16 | 7 | 206 | 171.5 | 2.80 | AW 34 |
| **AN 36** | M 180×3 | 203 | 230 | 27 | 18 | 8 | 214 | 181.5 | 3.07 | AW 36 |
| **AN 38** | M 190×3 | 214 | 240 | 28 | 18 | 8 | 224 | 191.5 | 3.39 | AW 38 |
| **AN 40** | M 200×3 | 226 | 250 | 29 | 18 | 8 | 234 | 201.5 | 3.69 | AW 40 |





| No. | Thread Nominal G | Dimensions (mm) | | | | | | | Mass (kg) (reference) | Lockwasher No. |
|---|---|---|---|---|---|---|---|---|---|---|
| | | $d_1$ | $d_2$ | B | b | h | g | $d_6$ | | |
| **ANL 24** | M 120×2 | 133 | 145 | 20 | 12 | 5 | 135 | 121 | 0.780 | AWL24 |
| **ANL 26** | M 130×2 | 143 | 155 | 21 | 12 | 5 | 145 | 131 | 0.880 | AWL26 |
| **ANL 28** | M 140×2 | 151 | 165 | 22 | 14 | 6 | 153 | 141 | 0.990 | AWL28 |
| **ANL 30** | M 150×2 | 164 | 180 | 24 | 14 | 6 | 168 | 151 | 1.38 | AWL30 |
| **ANL 32** | M 160×3 | 174 | 190 | 25 | 16 | 7 | 176 | 161.5 | 1.56 | AWL32 |
| **ANL 34** | M 170×3 | 184 | 200 | 26 | 16 | 7 | 186 | 171.5 | 1.72 | AWL34 |
| **ANL 36** | M 180×3 | 192 | 210 | 27 | 18 | 8 | 194 | 181.5 | 1.95 | AWL36 |
| **ANL 38** | M 190×3 | 202 | 220 | 28 | 18 | 8 | 204 | 191.5 | 2.08 | AWL38 |
| **ANL 40** | M 200×3 | 218 | 240 | 29 | 18 | 8 | 224 | 201.5 | 2.98 | AWL40 |

# Locknuts
## Series AN / ANL

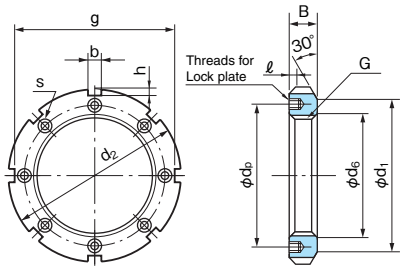


| No. | Thread Nominal G | Dimensions (mm) | | | | | | | | | | Mass (kg) (reference) | Lockwasher No. |
|---|---|---|---|---|---|---|---|---|---|---|---|---|---|
| | | $d_1$ | $d_2$ | B | b | h | g | $d_6$ | ℓ | s | $d_p$ | | |
| AN 44 | Tr 220×4 | 250 | 280 | 32 | 20 | 10 | 260 | 222 | 15 | M 8×1.25 | 238 | 5.20 | AL 44 |
| AN 48 | Tr 240×4 | 270 | 300 | 34 | 20 | 10 | 280 | 242 | 15 | M 8×1.25 | 258 | 5.95 | AL 44 |
| AN 52 | Tr 260×4 | 300 | 330 | 36 | 24 | 12 | 306 | 262 | 18 | M 10×1.5 | 281 | 8.05 | AL 52 |
| AN 56 | Tr 280×4 | 320 | 350 | 38 | 24 | 12 | 326 | 282 | 18 | M 10×1.5 | 301 | 9.05 | AL 52 |
| AN 60 | Tr 300×4 | 340 | 380 | 40 | 24 | 12 | 356 | 302 | 18 | M 10×1.5 | 326 | 11.8 | AL 60 |
| AN 64 | Tr 320×5 | 360 | 400 | 42 | 24 | 12 | 376 | 322.5 | 18 | M 10×1.5 | 345 | 13.1 | AL 64 |
| AN 68 | Tr 340×5 | 400 | 440 | 55 | 28 | 15 | 410 | 342.5 | 21 | M 12×1.75 | 372 | 23.1 | AL 68 |
| AN 72 | Tr 360×5 | 420 | 460 | 58 | 28 | 15 | 430 | 362.5 | 21 | M 12×1.75 | 392 | 25.1 | AL 68 |
| AN 76 | Tr 380×5 | 450 | 490 | 60 | 32 | 18 | 454 | 382.5 | 21 | M 12×1.75 | 414 | 30.9 | AL 76 |
| AN 80 | Tr 400×5 | 470 | 520 | 62 | 32 | 18 | 484 | 402.5 | 27 | M 16×2 | 439 | 36.9 | AL 80 |
| AN 84 | Tr 420×5 | 490 | 540 | 70 | 32 | 18 | 504 | 422.5 | 27 | M 16×2 | 459 | 43.5 | AL 80 |
| AN 88 | Tr 440×5 | 510 | 560 | 70 | 36 | 20 | 520 | 442.5 | 27 | M 16×2 | 477 | 45.3 | AL 88 |
| AN 92 | Tr 460×5 | 540 | 580 | 75 | 36 | 20 | 540 | 462.5 | 27 | M 16×2 | 497 | 50.4 | AL 88 |
| AN 96 | Tr 480×5 | 560 | 620 | 75 | 36 | 20 | 580 | 482.5 | 27 | M 16×2 | 527 | 62.2 | AL 96 |
| AN 100 | Tr 500×5 | 580 | 630 | 80 | 40 | 23 | 584 | 502.5 | 27 | M 16×2 | 539 | 63.3 | AL 100 |
| ANL 44 | Tr 220×4 | 242 | 260 | 30 | 20 | 9 | 242 | 222 | 12 | M 6×1 | 229 | 3.09 | ALL 44 |
| ANL 48 | Tr 240×4 | 270 | 290 | 34 | 20 | 10 | 270 | 242 | 15 | M 8×1.25 | 253 | 5.16 | ALL 48 |
| ANL 52 | Tr 260×4 | 290 | 310 | 34 | 20 | 10 | 290 | 262 | 15 | M 8×1.25 | 273 | 5.67 | ALL 48 |
| ANL 56 | Tr 280×4 | 310 | 330 | 38 | 24 | 10 | 310 | 282 | 15 | M 8×1.25 | 293 | 6.78 | ALL 56 |
| ANL 60 | Tr 300×4 | 336 | 360 | 42 | 24 | 12 | 336 | 302 | 15 | M 8×1.25 | 316 | 9.62 | ALL 60 |
| ANL 64 | Tr 320×5 | 356 | 380 | 42 | 24 | 12 | 356 | 322.5 | 15 | M 8×1.25 | 335 | 9.94 | ALL 64 |
| ANL 68 | Tr 340×5 | 376 | 400 | 45 | 24 | 12 | 376 | 342.5 | 15 | M 8×1.25 | 355 | 11.7 | ALL 64 |
| ANL 72 | Tr 360×5 | 394 | 420 | 45 | 28 | 13 | 394 | 362.5 | 15 | M 8×1.25 | 374 | 12.0 | ALL 72 |
| ANL 76 | Tr 380×5 | 422 | 450 | 48 | 28 | 14 | 422 | 382.5 | 18 | M 10×1.5 | 398 | 14.9 | ALL 76 |
| ANL 80 | Tr 400×5 | 442 | 470 | 52 | 28 | 14 | 442 | 402.5 | 18 | M 10×1.5 | 418 | 16.9 | ALL 76 |
| ANL 84 | Tr 420×5 | 462 | 490 | 52 | 32 | 14 | 462 | 422.5 | 18 | M 10×1.5 | 438 | 17.4 | ALL 84 |
| ANL 88 | Tr 440×5 | 490 | 520 | 60 | 32 | 15 | 490 | 442.5 | 21 | M 12×1.75 | 462 | 26.2 | ALL 88 |
| ANL 92 | Tr 460×5 | 510 | 540 | 60 | 32 | 15 | 510 | 462.5 | 21 | M 12×1.75 | 482 | 29.6 | ALL 88 |
| ANL 96 | Tr 480×5 | 530 | 560 | 60 | 36 | 15 | 530 | 482.5 | 21 | M 12×1.75 | 502 | 28.3 | ALL 96 |
| ANL100 | Tr 500×5 | 550 | 580 | 68 | 36 | 15 | 550 | 502.5 | 21 | M 12×1.75 | 522 | 33.6 | ALL 96 |





# Nuts for withdrawal sleeves
## Series HN / HNL

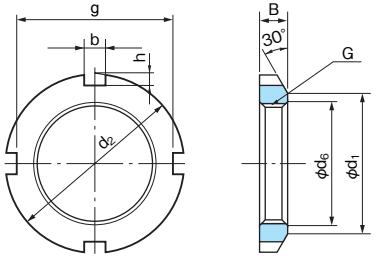


| No. | Thread Nominal G | Dimensions (mm) | | | | | | | Mass (kg) (reference) |
|---|---|---|---|---|---|---|---|---|---|
| | | $d_1$ | $d_2$ | B | b | h | g | $d_6$ | |
| HN 42 | Tr 210×4 | 238 | 270 | 30 | 20 | 10 | 250 | 212 | 4.75 |
| HN 44 | Tr 220×4 | 250 | 280 | 32 | 20 | 10 | 260 | 222 | 5.35 |
| HN 48 | Tr 240×4 | 270 | 300 | 34 | 20 | 10 | 280 | 242 | 6.20 |
| HN 52 | Tr 260×4 | 300 | 330 | 36 | 24 | 12 | 306 | 262 | 8.55 |
| HN 58 | Tr 290×4 | 330 | 370 | 40 | 24 | 12 | 346 | 292 | 11.8 |
| HN 62 | Tr 310×5 | 350 | 390 | 42 | 24 | 12 | 366 | 312.5 | 13.4 |
| HN 66 | Tr 330×5 | 380 | 420 | 52 | 28 | 15 | 390 | 332.5 | 20.4 |
| HN 70 | Tr 350×5 | 410 | 450 | 55 | 28 | 15 | 420 | 352.5 | 25.2 |
| HN 74 | Tr 370×5 | 430 | 470 | 58 | 28 | 15 | 440 | 372.5 | 28.2 |
| HN 80 | Tr 400×5 | 470 | 520 | 62 | 32 | 18 | 484 | 402.5 | 40.0 |
| HN 84 | Tr 420×5 | 490 | 540 | 70 | 32 | 18 | 504 | 422.5 | 46.9 |
| HN 88 | Tr 440×5 | 510 | 560 | 70 | 36 | 20 | 520 | 442.5 | 48.5 |
| HN 92 | Tr 460×5 | 540 | 580 | 75 | 36 | 20 | 540 | 462.5 | 55.0 |
| HN 96 | Tr 480×5 | 560 | 620 | 75 | 36 | 20 | 580 | 482.5 | 67.0 |
| HN 102 | Tr 510×6 | 590 | 650 | 80 | 40 | 23 | 604 | 513 | 69.0 |
| HN 106 | Tr 530×6 | 610 | 670 | 80 | 40 | 23 | 624 | 533 | 78.0 |
| HN 110 | Tr 550×6 | 640 | 700 | 80 | 40 | 23 | 654 | 553 | 92.5 |
| HNL 41 | Tr 205×4 | 232 | 250 | 30 | 18 | 8 | 234 | 207 | 3.43 |
| HNL 43 | Tr 215×4 | 242 | 260 | 30 | 20 | 9 | 242 | 217 | 3.72 |
| HNL 47 | Tr 235×4 | 262 | 280 | 34 | 20 | 9 | 262 | 237 | 4.60 |
| HNL 52 | Tr 260×4 | 290 | 310 | 34 | 20 | 10 | 290 | 262 | 5.80 |
| HNL 56 | Tr 280×4 | 310 | 330 | 38 | 24 | 10 | 310 | 282 | 6.72 |
| HNL 60 | Tr 300×4 | 336 | 360 | 42 | 24 | 12 | 336 | 302 | 9.60 |
| HNL 64 | Tr 320×5 | 356 | 380 | 42 | 24 | 12 | 356 | 322.5 | 10.3 |
| HNL 69 | Tr 345×5 | 384 | 410 | 45 | 28 | 13 | 384 | 347.5 | 11.5 |
| HNL 73 | Tr 365×5 | 404 | 430 | 48 | 28 | 13 | 404 | 367.5 | 14.2 |
| HNL 77 | Tr 385×5 | 422 | 450 | 48 | 28 | 14 | 422 | 387.5 | 15.0 |
| HNL 82 | Tr 410×5 | 452 | 480 | 52 | 32 | 14 | 452 | 412.5 | 19.0 |
| HNL 86 | Tr 430×5 | 472 | 500 | 52 | 32 | 14 | 472 | 432.5 | 19.8 |
| HNL 90 | Tr 450×5 | 490 | 520 | 60 | 32 | 15 | 490 | 452.5 | 23.8 |
| HNL 94 | Tr 470×5 | 510 | 540 | 60 | 32 | 15 | 510 | 472.5 | 25.0 |
| HNL 98 | Tr 490×5 | 550 | 580 | 60 | 36 | 15 | 550 | 492.5 | 34.0 |
| HNL104 | Tr 520×6 | 570 | 600 | 68 | 36 | 15 | 570 | 523 | 37.0 |
| HNL108 | Tr 540×6 | 590 | 630 | 68 | 40 | 20 | 590 | 543 | 43.5 |

# Lockwashers
## Series AW / AWL

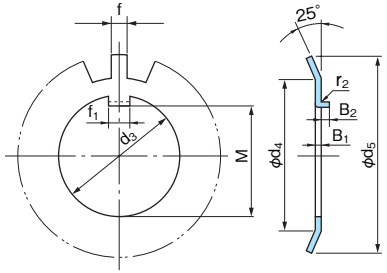


Bended inner tab type

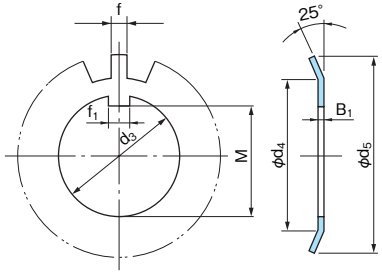


Straight inner tab type

| No. | | Dimensions (mm) | | | | | | | | | No. of Teeth | Mass (kg/100pcs) (reference) | Locknut No. |
|---|---|---|---|---|---|---|---|---|---|---|---|---|---|
| Bended inner tab | Straight inner tab | $d_3$ | $d_4$ | $d_5$ | $f_1$ | M | $B_1$ | Bended inner tab $B_2$ | Bended inner tab $r_2$ | f | | | |
| AW 02 | AW 02X | 15 | 21 | 28 | 4 | 13.5 | 1 | 2.5 | 1 | 4 | 13 | 0.253 | AN 02 |
| AW 03 | AW 03X | 17 | 24 | 32 | 4 | 15.5 | 1 | 2.5 | 1 | 4 | 13 | 0.313 | AN 03 |
| AW 04 | AW 04X | 20 | 26 | 36 | 4 | 18.5 | 1 | 2.5 | 1 | 4 | 13 | 0.350 | AN 04 |
| AW 05 | AW 05X | 25 | 32 | 42 | 5 | 23 | 1.2 | 2.5 | 1 | 5 | 13 | 0.640 | AN 05 |
| AW 06 | AW 06X | 30 | 38 | 49 | 5 | 27.5 | 1.2 | 2.5 | 1 | 5 | 13 | 0.780 | AN 06 |
| AW 07 | AW 07X | 35 | 44 | 57 | 6 | 32.5 | 1.2 | 2.5 | 1 | 5 | 15 | 1.04 | AN 07 |
| AW 08 | AW 08X | 40 | 50 | 62 | 6 | 37.5 | 1.2 | 2.5 | 1 | 6 | 15 | 1.23 | AN 08 |
| AW 09 | AW 09X | 45 | 56 | 69 | 6 | 42.5 | 1.2 | 2.5 | 1 | 6 | 17 | 1.52 | AN 09 |
| AW 10 | AW 10X | 50 | 61 | 74 | 6 | 47.5 | 1.2 | 2.5 | 1 | 6 | 17 | 1.60 | AN 10 |
| AW 11 | AW 11X | 55 | 67 | 81 | 8 | 52.5 | 1.2 | 4 | 1 | 7 | 17 | 1.96 | AN 11 |
| AW 12 | AW 12X | 60 | 73 | 86 | 8 | 57.5 | 1.5 | 4 | 1.2 | 7 | 17 | 2.53 | AN 12 |
| AW 13 | AW 13X | 65 | 79 | 92 | 8 | 62.5 | 1.5 | 4 | 1.2 | 7 | 19 | 2.90 | AN 13 |
| AW 14 | AW 14X | 70 | 85 | 98 | 8 | 66.5 | 1.5 | 4 | 1.2 | 8 | 19 | 3.34 | AN 14 |
| AW 15 | AW 15X | 75 | 90 | 104 | 8 | 71.5 | 1.5 | 4 | 1.2 | 8 | 19 | 3.56 | AN 15 |
| AW 16 | AW 16X | 80 | 95 | 112 | 10 | 76.5 | 1.8 | 4 | 1.2 | 8 | 19 | 4.64 | AN 16 |
| AW 17 | AW 17X | 85 | 102 | 119 | 10 | 81.5 | 1.8 | 4 | 1.2 | 8 | 19 | 5.24 | AN 17 |
| AW 18 | AW 18X | 90 | 108 | 126 | 10 | 86.5 | 1.8 | 4 | 1.2 | 10 | 19 | 6.23 | AN 18 |
| AW 19 | AW 19X | 95 | 113 | 133 | 10 | 91.5 | 1.8 | 4 | 1.2 | 10 | 19 | 6.70 | AN 19 |
| AW 20 | AW 20X | 100 | 120 | 142 | 12 | 96.5 | 1.8 | 6 | 1.2 | 10 | 19 | 7.65 | AN 20 |
| AW 21 | AW 21X | 105 | 126 | 145 | 12 | 100.5 | 1.8 | 6 | 1.2 | 12 | 19 | 8.26 | AN 21 |
| AW 22 | AW 22X | 110 | 133 | 154 | 12 | 105.5 | 1.8 | 6 | 1.2 | 12 | 19 | 9.40 | AN 22 |
| AW 23 | AW 23X | 115 | 137 | 159 | 12 | 110.5 | 2 | 6 | 1.5 | 12 | 19 | 10.8 | AN 23 |
| AW 24 | AW 24X | 120 | 138 | 164 | 14 | 115 | 2 | 6 | 1.5 | 12 | 19 | 10.5 | AN 24 |
| AW 25 | AW 25X | 125 | 148 | 170 | 14 | 120 | 2 | 6 | 1.5 | 12 | 19 | 11.8 | AN 25 |
| AW 26 | AW 26X | 130 | 149 | 175 | 14 | 125 | 2 | 6 | 1.5 | 12 | 19 | 11.3 | AN 26 |
| AW 27 | AW 27X | 135 | 160 | 185 | 14 | 130 | 2 | 6 | 1.5 | 14 | 19 | 14.4 | AN 27 |
| AW 28 | AW 28X | 140 | 160 | 192 | 16 | 135 | 2 | 8 | 1.5 | 14 | 19 | 14.2 | AN 28 |
| AW 29 | AW 29X | 145 | 171 | 202 | 16 | 140 | 2 | 8 | 1.5 | 14 | 19 | 16.8 | AN 29 |
| AW 30 | AW 30X | 150 | 171 | 205 | 16 | 145 | 2 | 8 | 1.5 | 14 | 19 | 15.5 | AN 30 |
| AW 31 | AW 31X | 155 | 182 | 212 | 16 | 147.5 | 2.5 | 8 | 1.5 | 16 | 19 | 20.9 | AN 31 |
| AW 32 | AW 32X | 160 | 182 | 217 | 18 | 154 | 2.5 | 8 | 1.5 | 16 | 19 | 22.2 | AN 32 |
| AW 33 | AW 33X | 165 | 193 | 222 | 18 | 157.5 | 2.5 | 8 | 1.5 | 16 | 19 | 24.1 | AN 33 |
| AW 34 | AW 34X | 170 | 193 | 232 | 18 | 164 | 2.5 | 8 | 1.5 | 16 | 19 | 24.7 | AN 34 |
| AW 36 | AW 36X | 180 | 203 | 242 | 20 | 174 | 2.5 | 8 | 1.5 | 18 | 19 | 26.8 | AN 36 |
| AW 38 | AW 38X | 190 | 214 | 252 | 20 | 184 | 2.5 | 8 | 1.5 | 18 | 19 | 27.8 | AN 38 |
| AW 40 | AW 40X | 200 | 226 | 262 | 20 | 194 | 2.5 | 8 | 1.5 | 18 | 19 | 29.3 | AN 40 |





| No. | | Dimensions (mm) | | | | | | | | | No. of Teeth | Mass (kg/100pcs) (reference) | Locknut No. |
|---|---|---|---|---|---|---|---|---|---|---|---|---|---|
| Bended inner tab | Straight inner tab | $d_3$ | $d_4$ | $d_5$ | $f_1$ | M | $B_1$ | Bended inner tab $B_2$ | Bended inner tab $r_2$ | f | | | |
| AWL 24 | AWL 24X | 120 | 133 | 155 | 14 | 115 | 2 | 6 | 1.5 | 12 | 19 | 7.70 | ANL 24 |
| AWL 26 | AWL 26X | 130 | 143 | 165 | 14 | 125 | 2 | 6 | 1.5 | 12 | 19 | 8.70 | ANL 26 |
| AWL 28 | AWL 28X | 140 | 151 | 175 | 16 | 135 | 2 | 8 | 1.5 | 14 | 19 | 10.9 | ANL 28 |
| AWL 30 | AWL 30X | 150 | 164 | 190 | 16 | 145 | 2 | 8 | 1.5 | 14 | 19 | 11.3 | ANL 30 |
| AWL 32 | AWL 32X | 160 | 174 | 200 | 18 | 154 | 2.5 | 8 | 1.5 | 16 | 19 | 16.2 | ANL 32 |
| AWL 34 | AWL 34X | 170 | 184 | 210 | 18 | 164 | 2.5 | 8 | 1.5 | 16 | 19 | 19.0 | ANL 34 |
| AWL 36 | AWL 36X | 180 | 192 | 220 | 20 | 174 | 2.5 | 8 | 1.5 | 18 | 19 | 18.0 | ANL 36 |
| AWL 38 | AWL 38X | 190 | 202 | 230 | 20 | 184 | 2.5 | 8 | 1.5 | 18 | 19 | 20.5 | ANL 38 |
| AWL 40 | AWL 40X | 200 | 218 | 250 | 20 | 194 | 2.5 | 8 | 1.5 | 18 | 19 | 21.4 | ANL 40 |

Remark: Narrow slot adapters with part numbers with an X suffix in the series H2, H3 and H23 use straight type inner tabs. Wide slot adapters with part numbers with an X suffix can use either bended or straight inner tabs.

# Lock Plates

## Series AL / ALL

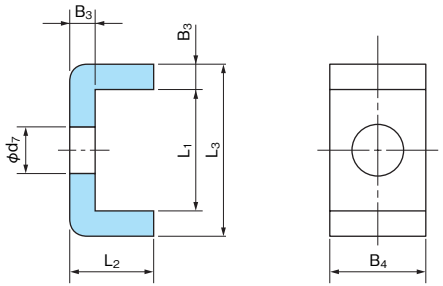


| No. | Dimensions (mm) | | | | | | Mass (kg/100pcs) (reference) | Nut No. |
|---|---|---|---|---|---|---|---|---|
| | $B_3$ | $B_4$ | $L_2$ | $d_7$ | $L_1$ | $L_3$ | | |
| **AL 44** | 4 | 20 | 12 | 9 | 22.5 | 30.5 | 2.60 | AN44 , AN48 |
| **AL 52** | 4 | 24 | 12 | 12 | 25.5 | 33.5 | 3.39 | AN52 , AN56 |
| **AL 60** | 4 | 24 | 12 | 12 | 30.5 | 38.5 | 3.79 | AN60 |
| **AL 64** | 5 | 24 | 15 | 12 | 31 | 41 | 5.35 | AN64 |
| **AL 68** | 5 | 28 | 15 | 14 | 38 | 48 | 6.65 | AN68 , AN72 |
| **AL 76** | 5 | 32 | 15 | 14 | 40 | 50 | 7.96 | AN76 |
| **AL 80** | 5 | 32 | 15 | 18 | 45 | 55 | 8.20 | AN80 , AN84 |
| **AL 88** | 5 | 36 | 15 | 18 | 43 | 53 | 9.00 | AN88 , AN92 |
| **AL 96** | 5 | 36 | 15 | 18 | 53 | 63 | 10.4 | AN96 |
| **AL 100** | 5 | 40 | 15 | 18 | 45 | 55 | 10.5 | AN100 |
| **ALL 44** | 4 | 20 | 12 | 7 | 13.5 | 21.5 | 2.12 | ANL44 |
| **ALL 48** | 4 | 20 | 12 | 9 | 17.5 | 25.5 | 2.29 | ANL48, ANL52 |
| **ALL 56** | 4 | 24 | 12 | 9 | 17.5 | 25.5 | 2.92 | ANL56 |
| **ALL 60** | 4 | 24 | 12 | 9 | 20.5 | 28.5 | 3.16 | ANL60 |
| **ALL 64** | 5 | 24 | 15 | 9 | 21 | 31 | 4.56 | ANL64, ANL68 |
| **ALL 72** | 5 | 28 | 15 | 9 | 20 | 30 | 5.03 | ANL72 |
| **ALL 76** | 5 | 28 | 15 | 12 | 24 | 34 | 5.28 | ANL76, ANL80 |
| **ALL 84** | 5 | 32 | 15 | 12 | 24 | 34 | 6.11 | ANL84 |
| **ALL 88** | 5 | 32 | 15 | 14 | 28 | 38 | 6.45 | ANL88, ANL92 |
| **ALL 96** | 5 | 36 | 15 | 14 | 28 | 38 | 7.29 | ANL96, ANL100 |



NACHI

# Dish Spring for Bearings

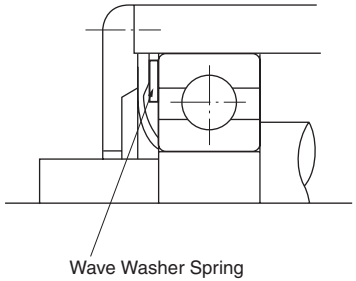


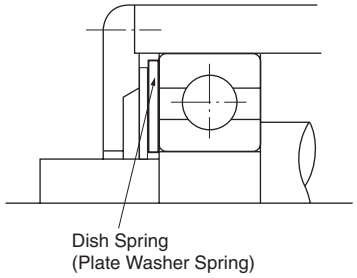

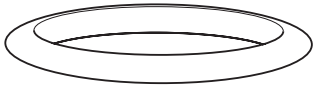

The application for electrical motors may sometimes require that the bearings be provided with appropriate preload when assembled.
In case of motors the residual clearance 0 after mounting is best for low noise.
Preload has the following various purposes and effects.

<Purpose of Preload>

(1) Enhances rotating accuracy of shaft. Minimizes axial movements and helps to prevent vibration and decrease noise.
(2) Prevents fretting caused by external vibration.
(3) Increases rigidity of a shaft (that is, preloading can help to decrease the deflection of shafting).

<Preloading method>

Use of springs (wave washer spring or dish spring) “Constantpressure” preloading.
The preload for electrical motor bearings may be calculated by using the following equations.
Tp=Preload Force (kgf) d=Inner Ring Bore Diameter(mm)

Tp=(0.4～0.8)d or Tp=0.6d-3





## Preload by Dish Springs for Bearings

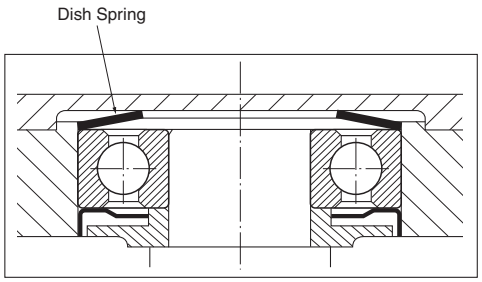


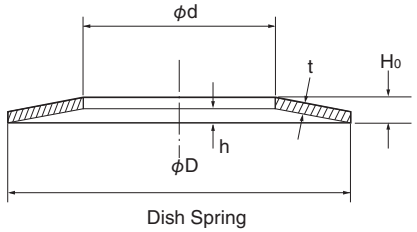


| Bearing No. | Bearing I.D (dmm) | Spring No. | Target Preload (Tp N) | | Recommended Preload (N) | Flexure (dmm) | Spring Hgt (Ho mm) |
|---|---|---|---|---|---|---|---|
| | | | Tp=(0.4～0.8)d Range | Tp=0.6d-3 | | | |
| 6001 | 12 | HDS-28 | 47.0～94.1 | 41.2 | 88.7 | 0.25 | 0.75 |
| 6002 | 15 | HDS-32 | 58.8～117.6 | 58.8 | 100.0 | 0.41 | 0.64 |
| 6003 | 17 | HDS-35b | 66.6～133.3 | 70.6 | 110.0 | 0.28 | 0.87 |
| 6004 | 20 | HDS-42 | 78.4～156.8 | 88.2 | 116.0 | 0.38 | 0.97 |
| 6005 | 25 | HDS-47 | 98.0～196.0 | 117.6 | 145.0 | 0.38 | 1.07 |
| 6006 | 30 | HDS-55 | 117.6～235.2 | 147.0 | 163.0 | 0.56 | 0.89 |
| 6007 | 35 | HDS-62 | 137.2～274.4 | 176.4 | 168.0 | 0.48 | 1.27 |
| 6008 | 40 | HDS-68 | 156.8～313.6 | 205.8 | 183.0 | 0.64 | 1.01 |
| 6009 | 45 | HDS-75 | 176.4～352.8 | 235.2 | 236.0 | 0.56 | 1.19 |
| 6010 | 50 | HDS-80b | 196.0～392.0 | 264.6 | 256.0 | 0.58 | 1.57 |
| 6011 | 55 | HDS-90b | 215.6～431.2 | 294.0 | 321.0 | 0.55 | 1.75 |
| 6200 | 10 | HDS-30 | 39.2～78.4 | 29.4 | 84.2 | 0.28 | 0.77 |
| 6201 | 12 | HDS-32 | 47.0～94.1 | 41.2 | 82.6 | 0.28 | 0.77 |
| 6202 | 15 | HDS-35b | 58.8～117.6 | 58.8 | 110.0 | 0.28 | 0.87 |
| 6203 | 17 | HDS-40 | 66.6～133.3 | 70.6 | 107.0 | 0.33 | 0.92 |
| 6204 | 20 | HDS-47 | 78.4～156.8 | 88.2 | 145.0 | 0.38 | 1.07 |
| 6205 | 25 | HDS-52 | 98.0～196.0 | 117.6 | 128.0 | 0.38 | 1.07 |
| 6206 | 30 | HDS-62 | 117.6～235.2 | 147.0 | 168.0 | 0.48 | 1.27 |
| 6207 | 35 | HDS-72b | 137.2～274.4 | 176.4 | 219.0 | 0.45 | 1.45 |
| 6208 | 40 | HDS-80b | 156.8～313.6 | 205.8 | 256.0 | 0.58 | 1.57 |
| 6209 | 45 | HDS-85 | 176.4～352.8 | 235.2 | 344.0 | 0.55 | 1.75 |
| 6210 | 50 | HDS-90b | 196.0～392.0 | 264.6 | 321.0 | 0.55 | 1.75 |
| 6300 | 10 | HDS-35a | 39.2～78.4 | 29.4 | 62.0 | 0.28 | 0.77 |
| 6301 | 12 | HDS-37 | 47.0～94.1 | 41.2 | 108.0 | 0.33 | 0.92 |
| 6302 | 15 | HDS-42 | 58.8～117.6 | 58.8 | 116.0 | 0.38 | 0.97 |
| 6303 | 17 | HDS-47 | 66.6～133.3 | 70.6 | 145.0 | 0.38 | 1.07 |
| 6304 | 20 | HDS-52 | 78.4～156.8 | 88.2 | 128.0 | 0.38 | 1.07 |
| 6305 | 25 | HDS-62 | 98.0～196.0 | 117.6 | 168.0 | 0.48 | 1.27 |
| 6306 | 30 | HDS-72a | 117.6～235.2 | 147.0 | 253.0 | 0.55 | 1.55 |
| 6307 | 35 | HDS-80a | 137.2～274.4 | 176.4 | 221.0 | 0.58 | 1.57 |
| 6308 | 40 | HDS-90a | 156.8～313.6 | 205.8 | 276.0 | 0.55 | 1.75 |
| 6309 | 45 | HDS-100a | 176.4～352.8 | 235.2 | 266.0 | 0.63 | 1.82 |
| 6310 | 50 | HDS-110a | 196.0～392.0 | 264.6 | 304.0 | 0.78 | 1.97 |

# Dish Spring List for Bearings

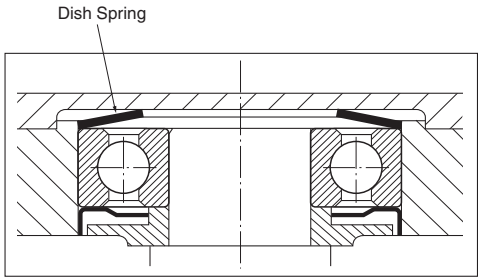


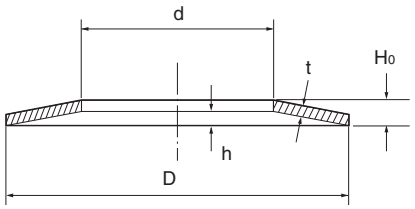


Dish Spring

Unit (mm)

| Size | Applicable Bearing No. | Dish Spring Size (mm) | | | | | Spring Load (N) | | | |
|---|---|---|---|---|---|---|---|---|---|---|
| | | | | | | | Flexure 0.5h | | Flexure 0.75h | |
| | | D | d | t | h | Ho | P | δ | P | δ |
| HDS-10 | EL3 623 | 9.8 | 6.2 | 0.20 | 0.20 | 0.40 | 18.40 | 0.10 | 23.20 | 0.15 |
| HDS-13 | EL4 624 | 12.8 | 7.2 | 0.25 | 0.25 | 0.50 | 23.90 | 0.13 | 29.70 | 0.19 |
| HDS-16 | R4 EL5 625 634 | 15.8 | 8.2 | | 0.30 | 0.55 | 19.40 | 0.15 | 23.40 | 0.23 |
| HDS-19a | R5 EL6 626 635 | 18.8 | 9.2 | 0.30 | 0.35 | 0.65 | 26.60 | 0.18 | 31.50 | 0.26 |
| HDS-19b | EL7 607 | | 10.2 | 0.35 | | 0.70 | 41.20 | | 50.80 | |
| HDS-22 | R7 EL8 608 627 636 | 21.8 | 12.3 | | 0.40 | 0.75 | 38.40 | 0.20 | 46.60 | 0.30 |
| HDS-24 | EL9 609 628 | 23.7 | 14.3 | 0.40 | 0.50 | 0.90 | 68.80 | 0.25 | 81.30 | 0.38 |
| HDS-26 | R9 6000 629 637 | 25.7 | | | | | 54.30 | | 64.10 | |
| HDS-28 | 6001 638 | 27.7 | 17.3 | 0.50 | | 1.00 | 88.70 | | 113.00 | |
| HDS-30 | 6200 | 29.7 | | | 0.55 | 1.05 | 84.20 | 0.28 | 102.00 | 0.41 |
| HDS-32 | 6002 6201 | 31.7 | 20.4 | | | | 82.60 | | 100.00 | |
| HDS-35a | 6300 | 34.6 | | | | | 62.70 | | 76.00 | |
| HDS-35b | 6003 6202 | | 22.4 | 0.60 | | 1.15 | 110.00 | | 139.00 | |
| HDS-37 | 6301 | 36.6 | 20.4 | | 0.65 | 1.25 | 108.00 | 0.33 | 132.00 | 0.49 |
| HDS-40 | 6203 | 39.6 | 25.5 | | | | 107.00 | | 131.00 | |
| HDS-42 | 6004 6302 | 41.6 | | | 0.75 | 1.35 | 116.00 | 0.38 | 135.00 | 0.56 |
| HDS-47 | 6005 6204 6303 | 46.5 | 30.5 | 0.70 | | 1.45 | 145.00 | | 177.00 | |
| HDS-52 | 6205 6304 | 51.5 | 35.5 | | | | 128.00 | | 156.00 | |
| HDS-55 | 6006 | 54.5 | 40.5 | | | | 133.00 | | 163.00 | |
| HDS-62 | 6007 6206 6305 | 61.5 | | 0.80 | 0.95 | 1.75 | 168.00 | 0.48 | 200.00 | 0.71 |
| HDS-68 | 6008 | 67.5 | 50.5 | | 0.85 | 1.65 | 148.00 | 0.43 | 183.00 | 0.64 |
| HDS-72a | 6306 | 71.5 | 45.5 | 1.00 | 1.10 | 2.10 | 253.00 | 0.55 | 312.00 | 0.83 |
| HDS-72b | 6207 | | 50.5 | | 0.90 | 1.90 | 219.00 | 0.45 | 286.00 | 0.68 |
| HDS-75 | 6009 | 74.5 | 55.5 | | 0.75 | 1.75 | 177.00 | 0.38 | 236.00 | 0.56 |
| HDS-80a | 6307 | 79.5 | 50.5 | | 1.15 | 2.15 | 221.00 | 0.58 | 266.00 | 0.86 |
| HDS-80b | 6010 6208 | | 55.5 | | | | 256.00 | | 308.00 | |
| HDS-85 | 6209 | 84.5 | 60.5 | 1.20 | 1.10 | 2.30 | 344.00 | 0.55 | 445.00 | 0.83 |
| HDS-90a | 6308 | 89.5 | | | | | 276.00 | | 357.00 | |
| HDS-90b | 6011 6210 | | 65.5 | | | | 321.00 | | 416.00 | |
| HDS-95 | 6012 | 94.5 | 75.5 | | 0.85 | 2.05 | 260.00 | 0.43 | 351.00 | 0.64 |
| HDS-100a | 6309 | 99.0 | 65.5 | | 1.25 | 2.45 | 266.00 | 0.63 | 331.00 | 0.94 |
| HDS-100b | 6013 6211 | | 70.5 | | | | 303.00 | | 376.00 | |
| HDS-110a | 6310 | 109.0 | | | 1.55 | 2.75 | 304.00 | 0.78 | 353.00 | 1.16 |
| HDS-110b | 6014 6212 | | 75.5 | | | | 339.00 | | 393.00 | |
| HDS-115 | 6015 | 114.0 | 90.5 | | 1.30 | 2.50 | 321.00 | 0.65 | 396.00 | 0.98 |
| HDS-120a | 6311 | 119.0 | 75.5 | | 1.55 | 2.75 | 249.00 | 0.78 | 289.00 | 1.16 |





Unit (mm)

| Size | Applicable Bearing No. | Dish Spring Size (mm) | | | | | Spring Load (N) | | | |
|---|---|---|---|---|---|---|---|---|---|---|
| | | | | | | | Flexure 0.5h | | Flexure 0.75h | |
| | | D | d | t | h | Ho | P | δ | P | δ |
| HDS-120b | 6213 | 119.0 | 85.5 | 1.20 | 1.55 | 2.75 | 305.00 | 0.78 | 354.00 | 1.16 |
| HDS-125 | 6016 6214 | 124.0 | 90.5 | | | | 291.00 | | 337.00 | |
| HDS-130a | 6312 | 129.0 | 85.5 | 1.50 | 1.70 | 3.20 | 438.00 | 0.85 | 533.00 | 1.28 |
| HDS-130b | 6017 6215 | | 95.5 | | | | 540.00 | | 657.00 | |
| HDS-140a | 6313 | 139.0 | 90.5 | | | | 368.00 | | 448.00 | |
| HDS-140b | 6018 6216 | | 101.0 | | 1.75 | 3.25 | 469.00 | 0.88 | 563.00 | 1.31 |
| HDS-150a | 6314 | 149.0 | 95.5 | | 1.70 | 3.20 | 313.00 | 0.85 | 381.00 | 1.28 |
| HDS-150b | 6217 | | 106.0 | | | | 371.00 | | 452.00 | |
| HDS-160a | 6315 | 159.0 | 101.0 | 1.60 | 1.85 | 3.45 | 365.00 | 0.93 | 440.00 | 1.39 |
| HDS-160b | 6218 | | 111.0 | | | | 422.00 | | 508.00 | |
| HDS-170a | 6316 | 169.0 | | | 2.05 | 3.65 | 403.00 | 1.03 | 469.00 | 1.54 |
| HDS-170b | 6219 | | 121.0 | | | | 467.00 | | 544.00 | |
| HDS-180a | 6317 | 179.0 | | 2.00 | 2.20 | 4.20 | 706.00 | 1.10 | 866.00 | 1.65 |
| HDS-180b | 6220 | | 126.0 | | | | 758.00 | | 930.00 | |
| HDS-190a | 6318 | 189.0 | 121.0 | | 2.30 | 4.30 | 629.00 | 1.15 | 762.00 | 1.73 |
| HDS-190b | 6221 | | 131.0 | | | | 711.00 | | 861.00 | |
| HDS-200a | 6319 | 198.0 | | | 2.50 | 4.50 | 692.00 | 1.25 | 815.00 | 1.88 |
| HDS-200b | 6222 | | 141.0 | | | | 786.00 | | 925.00 | |
| HDS-215a | 6320 | 213.0 | 151.0 | 2.30 | 2.20 | | 772.00 | 1.10 | 986.00 | 1.65 |
| HDS-225 | 6321 | 223.0 | 161.0 | | 2.30 | 4.60 | 783.00 | 1.15 | 989.00 | 1.73 |
| HDS-230 | 6226 | 228.0 | | | 2.60 | 4.90 | 870.00 | 1.30 | 1060.00 | 1.95 |
| HDS-240 | 6322 | 238.0 | | | 2.85 | 5.15 | 864.00 | 1.43 | 1020.00 | 2.14 |
| HDS-250 | 6228 | 248.0 | 171.0 | 2.50 | 2.50 | 5.00 | 819.00 | 1.25 | 1030.00 | 1.88 |
| HDS-260 | 6324 | 258.0 | | | 3.00 | 5.50 | 951.00 | 1.50 | 113.000 | 2.25 |
| HDS-270 | 6230 | 268.0 | 181.0 | | 3.10 | 5.60 | 960.00 | 1.55 | | 2.33 |
| HDS-280 | 6326 | 278.0 | | | 3.25 | 5.75 | 917.00 | 1.63 | 1060.00 | 2.44 |
| HDS-290 | 6232 | 288.0 | 193.0 | | | | 892.00 | | 1030.00 | |
| HDS-300 | 6328 | 298.0 | | | | | 791.00 | | 917.00 | |
| HDS-310 | 6234 | 308.0 | 202.0 | 3.00 | 3.10 | 6.10 | 1070.00 | 1.55 | 1330.00 | 2.33 |
| HDS-320a | 6330 | 318.0 | 212.0 | | 3.20 | 6.20 | 1080.00 | 1.60 | 1340.00 | 2.40 |
| HDS-340a | 6332 | 338.0 | 232.0 | | 3.60 | 6.60 | 1220.00 | 1.80 | 1450.00 | 2.70 |
| HDS-360a | 6334 | 358.0 | 242.0 | | 3.90 | 6.90 | 1210.00 | 1.95 | 1410.00 | 2.93 |
| HDS-380 | 6336 | 378.0 | 252.0 | | | | 1060.00 | | 1230.00 | |
| HDS-400 | 6338 | 398.0 | 262.0 | 3.50 | 4.20 | 7.70 | 1520.00 | 2.10 | 1810.00 | 3.15 |
| HDS-420 | 6340 | 418.0 | 272.0 | 4.00 | 3.80 | 7.80 | 159.00 | 1.90 | 2030.00 | 2.85 |

Material: Carbon spring steel between S65CM and S75CM (JIS)
Hardness: between HRC38 and HRC45

NACHI

## Wave Springs for Bearings (Reference)

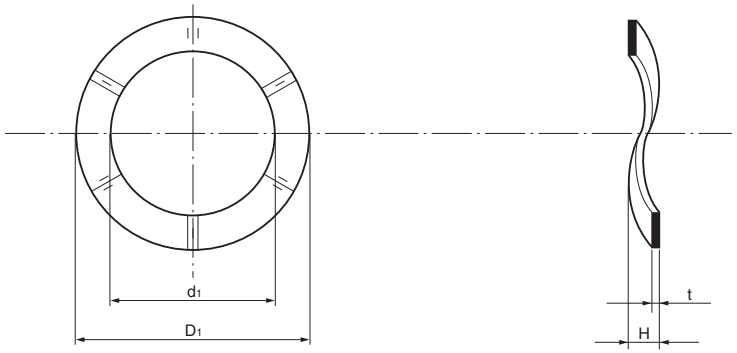


W=0.6d-3 W: Preload(Kgf)/d: Bore diameter
L=(1.94×dm3×W/(E×b×t3×N)(mm)
L: elastic displacement (mm)
dm=(d1+D1)/2 (mm) b=(D1-d1)/2 (mm)
t: thickness of sheet (mm)
E=20000 (kgf/mm2)
N: wave number

| Spring No. | Outside Diameter of Bearing (mm) | $d_1$: Bore Diameter of Spring (mm) | $D_1$: Outside Diameter of Spring (mm) | H: Height of Spring (mm) | t: Thickness of Sheet (mm) | | Wave Number | Spring Constant (mm/kgf) | Applied Bearing No. | | | | |
|---|---|---|---|---|---|---|---|---|---|---|---|---|---|
| W22 | 22 | 14.5 | 21 | 2.4 | 0.2 | | 3 | 0.2576 | 6900 | | | | |
| W26 | 26 | 19.5 | 24.8 | 3.2 | 0.2 | | 3 | 0.9139 | | 6000 | | | |
| W28 | 28 | 20.9 | 26.9 | 3 | 0.25 | | 3 | 0.3488 | 6902 | 6001 | | | |
| W30 | 30 | 22 | 28.5 | 4.1 | 0.25 | | 3 | 0.3796 | 6903 | | 6200 | | |
| W32 | 32 | 23.5 | 30.5 | 4 | 0.25 | | 3 | 0.4310 | | 6002 | 6201 | | |
| W35 | 35 | 26.4 | 33.9 | 3.5 | 0.3 | | 3 | 0.3242 | | 6003 | 6202 | 6300 | |
| W40 | 40 | 29.8 | 38.3 | 5 | 0.3 | | 3 | 0.4120 | | 6203 | | | |
| W42 | 42 | 30.1 | 40.6 | 4.5 | 0.3 | | 3 | 0.3732 | 6905 | 6004 | | 6302 | |
| W47 | 47 | 33.7 | 45.5 | 5 | 0.3 | | 3 | 0.4688 | 6906 | 6005 | 6204 | 6303 | |
| W52 | 52 | 38.5 | 50 | 7.2 | 0.3 | | 3 | 0.6683 | | 6205 | 6304 | | |
| W62 | 62 | 47.2 | 60.2 | 6.5 | 0.4 | | 3 | 0.4458 | 6908 | 6007 | 6206 | 6305 | 6403 |
| W72 | 72 | 55 | 70.5 | 7 | 0.45 | | 3 | 0.4190 | 6910 | | 6207 | 6306 | 6404 |
| W80 | 80 | 61.3 | 77.8 | 8.5 | 0.45 | | 3 | 0.5359 | 6911 | 6010 | 6208 | 6307 | 6405 |
| W90 | 90 | 69 | 88.5 | 7 | 0.6 | | 3 | 0.2777 | 6913 | 6011 | 6210 | 6308 | 6406 |
| W100 | 100 | 79.3 | 98.8 | 6.5 | 0.7 | | 3 | 0.2529 | 6914 | 6013 | 6211 | 6309 | 6407 |
| W110 | 110 | 88.9 | 108.9 | 8 | 0.8 | | 3 | 0.2263 | 6916 | 6014 | 6212 | 6310 | 6408 |
| W120 | 120 | 95.8 | 118.9 | 8.5 | 0.8 | | 3 | 0.2505 | 6917 | | 6213 | 6311 | 6409 |
| W130 | 130 | 108.3 | 128.3 | 11 | 0.8 | | 3 | 0.3872 | 6919 | 6017 | 6215 | 6312 | 6410 |
| W140 | 140 | 112.4 | 138.4 | 11 | 0.8 | | 3 | 0.3548 | 6920 | 6018 | 6216 | 6313 | 6411 |

Material: Spring Steel (JIS G3311/JIS G3506)/HARDNESS: HRc40-50/SURFACE TREATMENT PHOSPHATE COATING
Notes: 1. 't' means thickness of raw sheet.
2. '$d_1$' means inscribed circle and '$D_1$' means circumscribed circle.
3. 'H' means the height of spring of which the tops of 3 waves indicate same height first of all when it is compressed between 2 parallel plates

# Convenient Locking Nuts for Bearings

## ● Dimension Table for Fine U-NUT

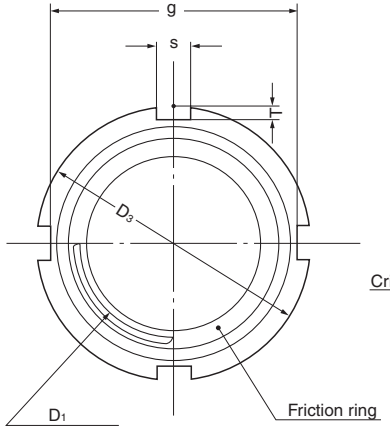


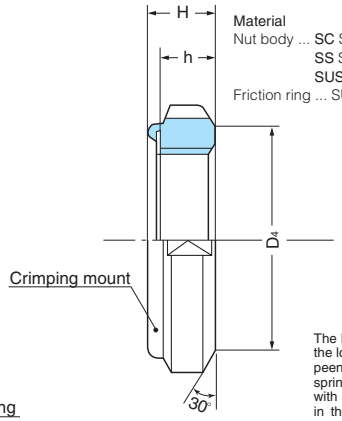


Material
Nut body ... SC SERIES (S45C-H or equivalent)
SS SERIES (SS400 or equivalent)
SUS SERIES (SUS304)
Friction ring ... SUS301

Construction and function

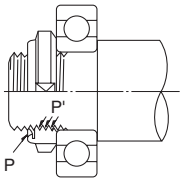


The FINE U-NUT is a one piece item where the locking function is performed by a spring peened into the top of the nut. In use the spring bears on the flank of the shaft thread with force (P) generating reaction force (P') in the screw threads with a resulting high friction torque (prevailing torque). The nut therefore remains locked in position

Thread accuracy: ISO6H(JIS CLASS2) Unit: mm

| SC Series | SS Series | SUS Series | Designation of thread $D_1$ | $D_3$ | | $D_4$ | | g | | T | S | | h | H | | Perpendicularity of bearing surface |
|---|---|---|---|---|---|---|---|---|---|---|---|---|---|---|---|---|
| FU00SC | FU00SS | FU00SUS | M10×0.75 | 18 | | 13.5 | | 14.4 | | 1.8 | 3 | | 4 | 5.2 | ± 0.3 | |
| FU01SC | FU01SS | FU01SUS | M12×1.0 | 22 | | 17 | | 18.4 | | 1.8 | 3 | | 4 | 5.4 | | |
| FU02SC | FU02SS | FU02SUS | M15×1.0 | 25 | | 21 | | 21.4 | | 1.8 | 4 | | 5 | 6.5 | ± 0.5 | |
| FU03SC | FU03SS | FU03SUS | M17×1.0 | 28 | | 24 | | 24.2 | | 1.9 | 4 | | 5 | 6.4 | | |
| FU04SC | FU04SS | FU04SUS | M20×1.0 | 32 | | 26 | | 28.4 | | 1.8 | 4 | | 6 | 7.7 | | |
| FU05SC | FU05SS | FU05SUS | M25×1.5 | 38 | | 32 | | 34 | | 2 | 5 | | 7 | 9.1 | | 0.05 |
| FU06SC | FU06SS | FU06SUS | M30×1.5 | 45 | | 38 | | 41 | | 2 | 5 | | 7 | 9.1 | ± 0.8 | |
| FU07SC | FU07SS | FU07SUS | M35×1.5 | 52 | | 44 | | 48 | | 2 | 5 | | 8 | 10.2 | | |
| FU08SC | FU08SS | FU08SUS | M40×1.5 | 58 | | 50 | 0 −0.5 | 53 | | 2.5 | 6 | ± 0.2 | 9 | 11.2 | | |
| FU09SC | FU09SS | FU09SUS | M45×1.5 | 65 | | 56 | | 60 | | 2.5 | 6 | | 10 | 12.5 | ± 1.0 | |
| FU10SC | FU10SS | FU10SUS | M50×1.5 | 70 | | 61 | | 65 | | 2.5 | 6 | | 11 | 13.5 | | |
| FU11SC | FU11SS | FU11SUS | M55×2.0 | 75 | | 67 | | 69 | | 3 | 7 | | 11 | 13.5 | | |
| FU12SC | FU12SS | FU12SUS | M60×2.0 | 80 | | 73 | | 74 | | 3 | 7 | | 11 | 13.5 | | |
| FU13SC | FU13SS | FU13SUS | M65×2.0 | 85 | | 79 | | 79 | | 3 | 7 | | 12 | 15 | ± 1.5 | |
| FU14SC | FU14SS | FU14SUS | M70×2.0 | 92 | | 85 | | 85 | | 3.5 | 8 | | 12 | 15 | | |
| FU15SC | FU15SS | FU15SUS | M75×2.0 | 98 | 0 −0.5 | 90 | | 91 | 0 −0.5 | 3.5 | 8 | | 13 | 15.8 | | |
| FU16SC | FU16SS | FU16SUS | M80×2.0 | 105 | | 95 | | 98 | | 3.5 | 8 | | 15 | 18.6 | | |
| FU17SC | FU17SS | FU17SUS | M85×2.0 | 110 | | 102 | | 103 | | 3.5 | 8 | | 16 | 19.2 | | 0.07 |
| FU18SC | FU18SS | FU18SUS | M90×2.0 | 120 | | 108 | | 112 | | 4 | 10 | | 16 | 20.3 | | |
| FU19SC | FU19SS | FU19SUS | M95×2.0 | 125 | | 113 | | 117 | | 4 | 10 | | 17 | 21.3 | | |
| FU20SC | FU20SS | FU20SUS | M100×2.0 | 130 | | 120 | | 122 | | 4 | 10 | | 18 | 22.3 | | |
| FU21SC | — | — | M105×2.0 | 140 | | 126 | | 130 | | 4 | 12 | | 18 | 22.3 | | |
| FU22SC | — | — | M110×2.0 | 145 | | 133 | | 135 | | 5 | 12 | | 19 | 23.3 | | |
| FU23SC | — | — | M115×2.0 | 150 | | 137 | 0 −0.75 | 140 | | 5 | 12 | ± 0.3 | 19 | 23.3 | | |
| FU24SC | — | — | M120×2.0 | 155 | | 138 | | 145 | | 5 | 12 | | 20 | 24.3 | | |
| FU25SC | — | — | M125×2.0 | 160 | | 148 | | 150 | | 5 | 12 | | 21 | 25.4 | | |
| FU26SC | — | — | M130×2.0 | 165 | | 149 | | 155 | | 5 | 12 | | 21 | 25.4 | ± 1.5 | 0.10 |
| FU27SC | — | — | M135×2.0 | 175 | | 160 | | 163 | | 6 | 14 | | 22 | 26.6 | | |
| FU28SC | — | — | M140×2.0 | 180 | | 160 | | 168 | | 6 | 14 | | 22 | 26.6 | | |
| FU29SC | — | — | M145×2.0 | 190 | | 171 | | 178 | | 6 | 14 | | 24 | 28.8 | | |
| FU30SC | — | — | M150×2.0 | 195 | | 171 | | 183 | | 6 | 14 | | 24 | 28.3 | | |

* Dimensions may be subject to change without notice due to our policy of product improvements.





## ● Construction and Function

The TWIN FU-NUT has two friction rings and a spacer which are secured to the upper surface of the nut, as shown below.
The two friction rings are arranged so that stress P generated by the spring action and the reaction P' act symmetrically about the shaft centre. This arrangement ensures an even contact force F around the contact face.

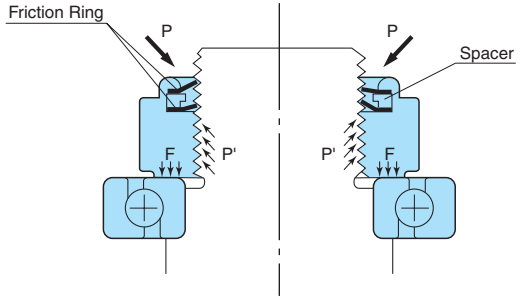


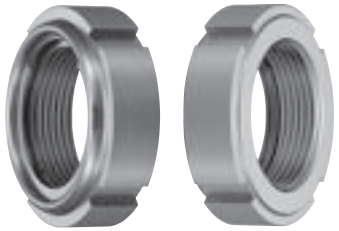

- Accuracy of thread is ISO 4H
- Excellent locking performance
- Bearing surface run out to thread form is held to within a few microns
- Simple assembly, as for a standard nut

## ● Dimension Table for Twin FU-NUT

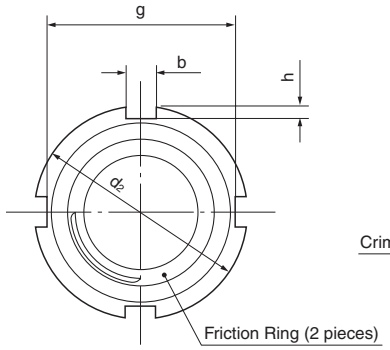


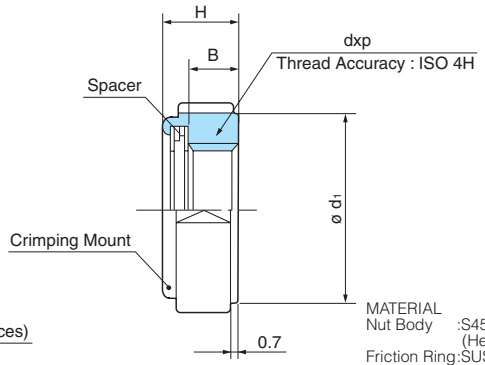


MATERIAL
Nut Body :S45C (Heat Treated)
Friction Ring:SUS301
Spacer :SUS301

*Simultaneous processing of the thread and the bearing surface.

Dimensions in millimeters

| Code No. | d×p | φd1 | | d2 | | H | | B | b | | h | g | | Imin=B+3.5p | Allowable axial dead load (KN) |
|---|---|---|---|---|---|---|---|---|---|---|---|---|---|---|---|
| TFU02SC | M15 × 1 | 21 | | 25 | | 9.9 | | 7 | 4 | | 1.8 | 21.4 | | 10.5 | 34.1 |
| TFU03SC | M17 × 1 | 23.5 | | 28 | | 10.1 | | 7 | 4 | | 2 | 24 | | 10.5 | 38.6 |
| TFU04SC | M20 × 1 | 27 | | 32 | | 12.3 | | 9 | 4 | | 2 | 28 | | 12.5 | 59.4 |
| TFU05SC | M25 × 1.5 | 33 | | 38 | | 14.2 | | 10 | 5 | | 2 | 34 | | 15.3 | 80.8 |
| TFU06SC | M30 × 1.5 | 40 | 0 −0.3 | 45 | 0 −0.5 | 14.3 | ±0.5 | 10 | 5 | ±0.2 | 2 | 41 | 0 −0.5 | 15.3 | 97.0 |
| TFU07SC | M35 × 1.5 | 47 | | 52 | | 16.5 | | 12 | 5 | | 2 | 48 | | 17.3 | 137.8 |
| TFU08SC | M40 × 1.5 | 52 | | 58 | | 17.6 | | 13 | 6 | | 2.5 | 53 | | 18.3 | 171.4 |
| TFU09SC | M45 × 1.5 | 59 | | 65 | | 19.7 | | 15 | 6 | | 2.5 | 60 | | 20.3 | 224.5 |
| TFU10SC | M50 × 1.5 | 64 | | 70 | | 20.8 | | 16 | 6 | | 2.5 | 65 | | 21.3 | 266.8 |

# Convenient HLB Locking Nuts for Bearings

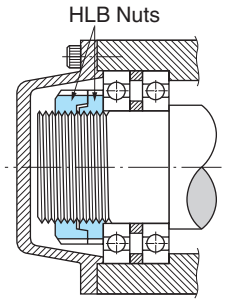


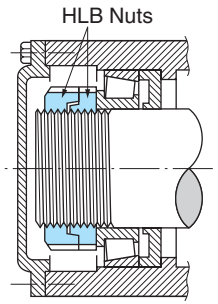


## ● Structure and Function

Locking performance of HLB nuts is based on the principle of a wedge.
After a lower nut is tightened, the upper nut is tightened by hand.
In this case, there is the clearance(G) between the lower nut and the upper nut.

The clearance(G) generates strong force and this force works to prevent the nuts from loosening, when the upper nut is tighted up to 0 clearance.
Because the cone of the lower nut and the cup of the upper nut are eccentric.

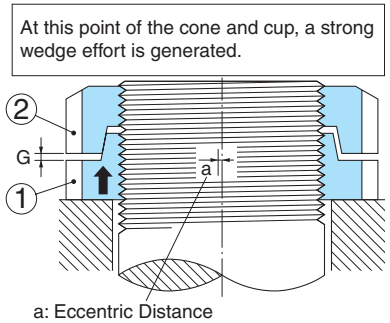


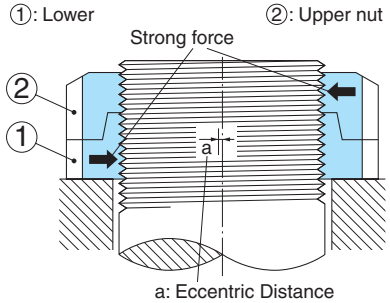






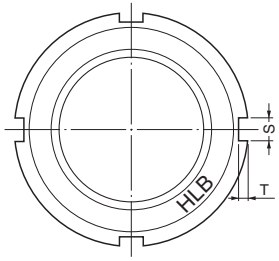


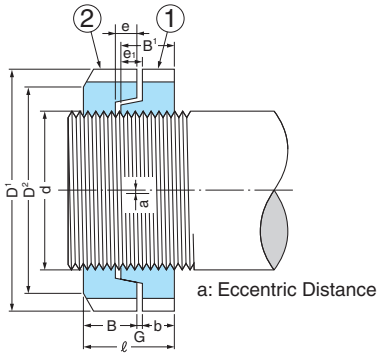


Material: SS400,S45C or SUS304
Outside shapes are standardized in JIS B 1554 and thread accuracy depends on ISO6H(JIS CLASS2).

Unit: mm

| Nut No. | d×p | Nut ① | | | | Nut ② | | | | Common to ① and ② | | Set Hight L | | Perpendicularity of the base (max) | Weight of 1 set (g) |
|---|---|---|---|---|---|---|---|---|---|---|---|---|---|---|---|
| | | $D^1$ | $B^1$ | $e_1$ | b | $D^1$ | $D^2$ | B | e | S | T | (min) | (max) | | |
| HLB-01 | M12×1 | 22 | 6 | 2.5 | 3.5 | 22 | 17 | 6 | 2.7 | 3 | 2 | 9.5 | 10.5 | 0.05 | 17 |
| HLB-02 | M15×1 | 25 | 7 | 2.5 | 4.5 | 25 | 21 | 7 | 2.7 | 4 | 2 | 11.5 | 12.5 | 0.05 | 23 |
| HLB-03 | M17×1 | 28 | 7 | 2.5 | 4.5 | 28 | 24 | 7 | 2.7 | 4 | 2 | 11.5 | 12.5 | 0.05 | 29 |
| HLB-04 | M20×1 | 32 | 8 | 2.5 | 5.5 | 32 | 26 | 8 | 2.7 | 4 | 2 | 13.5 | 14.5 | 0.05 | 43 |
| HLB-05 | M25×1.5 | 38 | 10 | 4 | 6 | 38 | 32 | 10 | 4.2 | 5 | 2 | 16 | 17.5 | 0.05 | 72 |
| HLB-06 | M30×1.5 | 45 | 10 | 4 | 6 | 45 | 38 | 10 | 4.2 | 5 | 2 | 16 | 17.5 | 0.05 | 103 |
| HLB-07 | M35×1.5 | 52 | 11 | 4 | 7 | 52 | 44 | 11 | 4.2 | 5 | 2 | 18 | 19.5 | 0.05 | 150 |
| HLB-08 | M40×1.5 | 58 | 9 | 4 | 5 | 58 | 50 | 12 | 4.2 | 6 | 2.5 | 17 | 18.5 | 0.05 | 170 |
| HLB-09 | M45×1.5 | 65 | 10 | 4 | 6 | 65 | 56 | 13 | 4.2 | 6 | 2.5 | 19 | 20.5 | 0.05 | 240 |
| HLB-10 | M50×1.5 | 70 | 11 | 4 | 7 | 70 | 61 | 14 | 4.2 | 6 | 2.5 | 21 | 22.5 | 0.05 | 285 |
| HLB-11 | M55×2 | 75 | 11 | 5 | 6 | 75 | 67 | 15 | 5.2 | 7 | 3 | 21 | 23 | 0.07 | 310 |
| HLB-12 | M60×2 | 80 | 11 | 5 | 6 | 80 | 73 | 15 | 5.2 | 7 | 3 | 21 | 23 | 0.07 | 340 |
| HLB-13 | M65×2 | 85 | 12 | 5 | 7 | 85 | 79 | 12 | 5.2 | 7 | 3 | 19 | 21 | 0.07 | 330 |
| HLB-14 | M70×2 | 92 | 12 | 5 | 7 | 92 | 85 | 12 | 5.2 | 8 | 3.5 | 19 | 21 | 0.07 | 390 |
| HLB-15 | M75×2 | 98 | 13 | 5 | 8 | 98 | 90 | 13 | 5.2 | 8 | 3.5 | 21 | 23 | 0.07 | 480 |
| HLB-16 | M80×2 | 105 | 15 | 5 | 10 | 105 | 95 | 15 | 5.2 | 8 | 3.5 | 25 | 27 | 0.07 | 660 |
| HLB-17 | M85×2 | 110 | 16 | 5 | 11 | 110 | 102 | 16 | 5.2 | 8 | 3.5 | 27 | 29 | 0.07 | 760 |
| HLB-18 | M90×2 | 120 | 16 | 5 | 11 | 120 | 108 | 16 | 5.2 | 10 | 4 | 27 | 29 | 0.07 | 940 |
| HLB-19 | M95×2 | 125 | 17 | 5 | 12 | 125 | 113 | 17 | 5.2 | 10 | 4 | 29 | 31 | 0.07 | 1000 |
| HLB-20 | M100×2 | 130 | 18 | 5 | 13 | 130 | 120 | 18 | 5.2 | 10 | 4 | 31 | 33 | 0.07 | 1230 |
| HLB-21 | M105×2 | 140 | 18 | 6 | 12 | 140 | 126 | 18 | 6.5 | 12 | 5 | 30 | 32 | 0.1 | 1500 |
| HLB-22 | M110×2 | 145 | 19 | 6 | 13 | 145 | 133 | 19 | 6.5 | 12 | 5 | 32 | 34 | 0.1 | 1600 |
| HLB-23 | M115×2 | 150 | 19 | 6 | 13 | 150 | 137 | 19 | 6.5 | 12 | 5 | 32 | 34 | 0.1 | 1700 |
| HLB-24 | M120×2 | 155 | 20 | 7 | 13 | 155 | 138 | 20 | 7.5 | 12 | 5 | 33 | 35 | 0.1 | 1800 |
| HLB-25 | M125×2 | 160 | 21 | 7 | 14 | 160 | 148 | 21 | 7.5 | 12 | 5 | 35 | 37 | 0.1 | 1900 |
| HLB-26 | M130×2 | 165 | 21 | 7 | 14 | 165 | 149 | 21 | 7.5 | 12 | 5 | 35 | 37 | 0.1 | 2100 |
| HLB-27 | M135×2 | 175 | 22 | 7 | 15 | 175 | 160 | 22 | 7.5 | 14 | 6 | 37 | 39 | 0.1 | 2600 |
| HLB-28 | M140×2 | 180 | 22 | 7 | 15 | 180 | 160 | 22 | 7.5 | 14 | 6 | 37 | 39 | 0.1 | 2700 |
| HLB-29 | M145×2 | 190 | 24 | 8 | 16 | 190 | 171 | 24 | 8.5 | 14 | 6 | 40 | 43 | 0.1 | 3400 |
| HLB-30 | M150×2 | 195 | 24 | 8 | 16 | 195 | 171 | 24 | 8.5 | 14 | 6 | 40 | 43 | 0.1 | 3550 |
| HLB-31 | M155×3 | 200 | 25 | 8 | 17 | 200 | 182 | 25 | 8.5 | 16 | 7 | 42 | 45 | 0.1 | 3800 |
| HLB-32 | M160×3 | 210 | 25 | 8 | 17 | 210 | 182 | 25 | 8.5 | 16 | 7 | 42 | 45 | 0.1 | 4200 |
| HLB-33 | M165×3 | 210 | 26 | 9 | 17 | 210 | 193 | 26 | 9.5 | 16 | 7 | 43 | 46 | 0.1 | 4300 |
| HLB-34 | M170×3 | 220 | 26 | 9 | 17 | 220 | 193 | 26 | 9.5 | 16 | 7 | 43 | 46 | 0.1 | 4750 |
| HLB-36 | M180×3 | 230 | 27 | 9 | 18 | 230 | 203 | 27 | 9.5 | 18 | 8 | 45 | 48 | 0.1 | 5000 |
| HLB-38 | M190×3 | 240 | 28 | 9 | 18 | 240 | 214 | 28 | 9.5 | 18 | 8 | 46 | 49 | 0.1 | 5500 |
| HLB-40 | M200×3 | 250 | 29 | 9 | 19 | 250 | 226 | 29 | 9.5 | 18 | 8 | 48 | 51 | 0.1 | 6300 |

# Hydraulic Nuts for Bearings

When larger bearings are mounted and dismounted, the work is considerably eased by using hydraulic nuts. See Fig.2 and Fig.3 in case of mounting and Fig.4 and Fig.5 in case of dismounting.

## 1. Structure

with two hydraulic connection bores on OD and on end face

Hydraulic nuts consist of two basic components: an internally threaded steel cylinder (1) with a circular groove in one face,and an annular piston (2) which is inserted into the cylinder.
Two O-rings (3) between cylinder and piston serve as seals.
When oil is pumped into the pressure chamber (6), the force with which the piston is ejected is sufficient to mount or dismount bearings.
The hydraulic medium is oil and can be fed through two hydraulic connection bores G1/4(4) by a pressure source (e.g. a hand pump). The connection bores are located on the end face and also on the OD. All hydraulic nuts are equipped with a nipple (5) for quick coupling to the oil supply; the threaded hole not being used is plugged by a closure nipple with ball,which is supplied with hydraulic nuts.
Unthreaded holes (8) are provided to take a drift of suitable length so that the screwing on of the nut is facilitated. Two of these holes are in the side faces and four around the circumference. The nut should be carefully turned until it abuts the bearing and the piston is fully retracted into the cylinder.
And another unthreaded hole (9) is provided to take an indicator to measure the stroke of the piston.





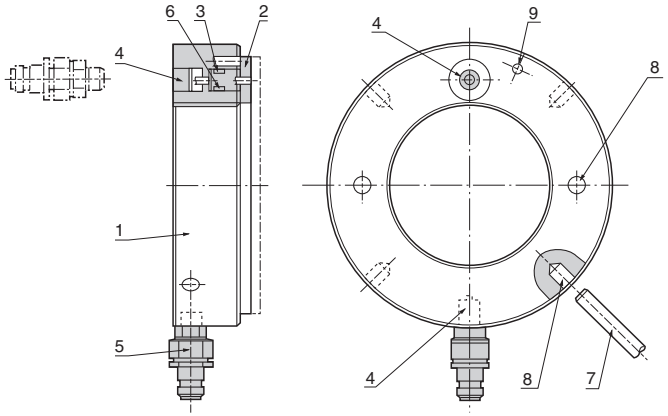


1: Cylinder 2: Piston 3: O-ring 4: Connecting bore G1/4 5: Nipple G1/4
6: Pressure chamber 7: Bar for rotating cylinder 8: Hole for bar
9: Hole for indicator to measure the stroke

**Fig.1. Structure**

## 2. Threads

Hydraulic nuts up to and including size 40 have metric ISO threads to tolerance 6H(ISO 965/Ⅲ-1980) and the larger nuts from size 41 have metric ISO trapezoidal threads to tolerance 7H(ISO 2901-1977).
The mating thread on the shaft should be made to tolerance 6g(ISO 2901-1977) for the sizes and tolerance 7e(ISO 2901-1977) for the sizes with trapezoidal thread.

## 3. Material

The cylinders of nuts up to and including size 58 are made of hardened steel and the matching pistons are made of carbon chromunum (bearing) steel. From size 60 the cylinders and pistons are made of construction steel.

## 4. Maintenance

If hydraulic nuts are not to be used for some time, they should be protected against corrosion. The holes for the oil supply leads should also be plugged.
If oil leaves the hydraulic nut when the piston is operated, this generally means that the seal is torn or damaged and must be replaced. To do this, the piston should be pressed out of the ring. To facilitate this operation, three auxiliary holes with closure nipples are provided in the full face of the cylinder. Using pins, which are supplied with the nut, the piston can be pushed out of the cylinder.

## 5. How to use

### 5.1 Mounting

(1) When mounting rolling bearings with a tapered bore on a tapered seating, adapter sleeve or withdrawal sleeve, the hydraulic nut is screwed on to a threaded section of the shaft or on to the sleeve thread until it abuts the bearing inner ring (Fig.2), or a special nut (Fig.3), or an end plate attached to the shaft end.

(2) The piston is in the initial position, i.e. it is fully retracted.

(3) A pump is used to inject pressurised oil into the nut. This displaces the piston axially and the bearing is pressed up on to the tapered seating. The permissible stroke (axial displacement) has been chosen to enable all bearings having bores with a taper of 1:12 or 1:30 to be mounted in a single operation.

(4) After mounting has been completed, the return valve of the pump should be opened so that the pressurised oil can leave the nut. To completely empty the oil, the piston must be returned to its original position. This is most easily accomplished by screwing the nut further up the shaft or sleeve thread.

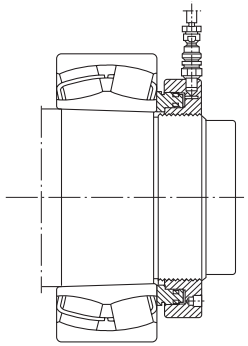

**Fig.2. The threaded section of a shaft**

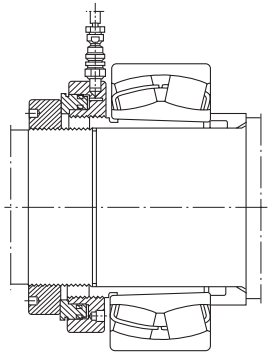

**Fig.3. Sleeve thread**





### 5.2 Dismounting

(1) When dismounting rolling bearings from withdrawal or adapter sleeves, the hydraulic nut is screwed on to the sleeve thread until it rests against the bearing inner ring (Fig.4), or a special nut, or against a special supprt ring (Fig.5).

(2) By displacing the piston, the sleeve will be withdrawn from the bearing bore, or the bearing will be pressed off the adapter sleeve.

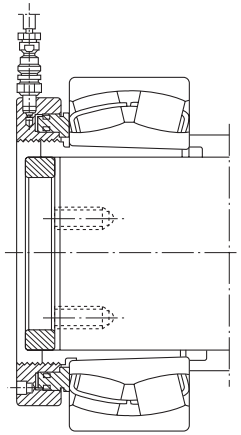

**Fig.4. Sleeve thread**

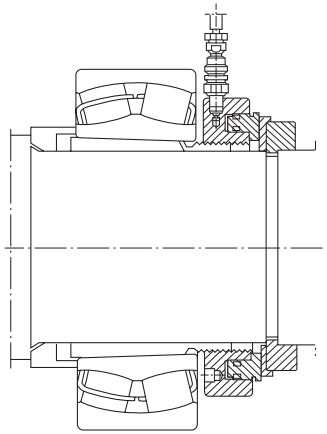

**Fig.5. Sleeve thread and special supporting ring**

## 6. Pumps

The pumps required to operate the hydraulic nuts should be suitable for pressures of 60 to 80 Mpa.

## 7. Pressure media

Normal machine oils having a viscosity of 300 mm2/s at the operating temperature are suitable pressure media. For mounting in the cold, less viscous oils should be used, e.g. oils for transformers.

# Convenient HLB Locking Nuts for Bearings

## Hydraulic Nuts A 5500 and A 5501 with metric thread

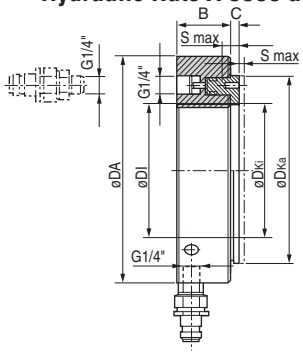


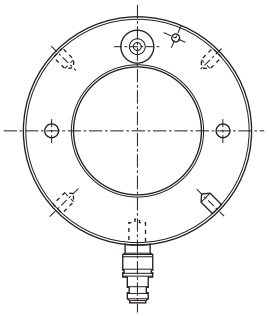

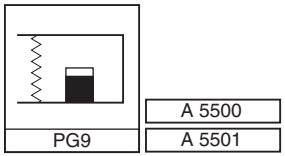


$$F = \frac{A \cdot p}{10.000}$$

F: Mounting or Dismounting Force (KN)
A: Piston Area (mm²)
p: Oil Pressure (bar)
Max. 1000 bar

| Thread DI *) (mm) | Article No. Right Hand | Article No. Left Hand | Plain Bore DI (mm) | Article No. Bore | OD DA (mm) | Height B (mm) | Projecting Length C (mm) | Stroke Smax. (mm) | Ring Piston (mm) ϕDKi | Ring Piston (mm) ϕDKa | Piston Area $A_K$ (mm²) | Weight (Steel) Ca. (kg) |
|---|---|---|---|---|---|---|---|---|---|---|---|---|
| M 50 × 1.5 | A 5500.1001 | A 5500.1002 | 46.7 | A 5500.1005 | 114 | 38 | 4 | 5 | 50.5 | 85 | 2.900 | 2.70 |
| M 55 × 2 | A 5500.1101 | A 5500.1102 | 51.1 | A 5500.1105 | 120 | 38 | 4 | 5 | 55.5 | 90 | 3.150 | 2.75 |
| M 60 × 2 | A 5500.1201 | A 5500.1202 | 56.1 | A 5500.1205 | 125 | 38 | 5 | 5 | 60.5 | 95 | 3.300 | 2.80 |
| M 65 × 2 | A 5500.1301 | A 5500.1302 | 61.1 | A 5500.1305 | 130 | 38 | 5 | 5 | 65.5 | 101 | 3.600 | 3.00 |
| M 70 × 2 | A 5500.1401 | A 5500.1402 | 66.1 | A 5500.1405 | 135 | 38 | 5 | 5 | 70.5 | 107 | 3.800 | 3.20 |
| M 75 × 2 | A 5500.1501 | A 5500.1502 | 71.1 | A 5500.1505 | 140 | 38 | 5 | 5 | 75.5 | 112 | 4.000 | 3.40 |
| M 80 × 2 | A 5500.1601 | A 5500.1602 | 76.1 | A 5500.1605 | 146 | 38 | 5 | 5 | 80.5 | 117 | 4.200 | 3.70 |
| M 85 × 2 | A 5500.1701 | A 5500.1702 | 81.1 | A 5500.1705 | 150 | 38 | 5 | 5 | 85.5 | 122 | 4.400 | 3.75 |
| M 90 × 2 | A 5500.1801 | A 5500.1802 | 86.1 | A 5500.1805 | 156 | 38 | 5 | 5 | 90.5 | 127 | 4.700 | 4.00 |
| M 95 × 2 | A 5500.1901 | A 5500.1902 | 91.1 | A 5500.1905 | 162 | 38 | 5 | 5 | 95.5 | 133 | 4.900 | 4.30 |
| M 100 × 2 | A 5500.2001 | A 5500.2002 | 96.1 | A 5500.2005 | 166 | 38 | 6 | 5 | 100.5 | 138 | 5.100 | 4.40 |
| M 105 × 2 | A 5500.2101 | A 5500.2102 | 101.1 | A 5500.2105 | 172 | 38 | 6 | 5 | 105.5 | 143 | 5.300 | 4.65 |
| M 110 × 2 | A 5500.2201 | A 5500.2202 | 106.1 | A 5500.2205 | 178 | 38 | 6 | 5 | 110.5 | 149 | 5.600 | 4.95 |
| M 115 × 2 | A 5500.2301 | A 5500.2302 | 111.1 | A 5500.2305 | 182 | 38 | 6 | 5 | 115.5 | 154 | 5.800 | 5.00 |
| M 120 × 2 | A 5500.2401 | A 5500.2402 | 116.1 | A 5500.2405 | 188 | 38 | 6 | 5 | 120.5 | 159 | 6.000 | 5.25 |
| M 125 × 2 | A 5500.2501 | A 5500.2502 | 121.1 | A 5500.2505 | 192 | 38 | 6 | 5 | 125.5 | 164 | 6.200 | 5.35 |
| M 130 × 2 | A 5500.2601 | A 5500.2602 | 126.1 | A 5500.2605 | 198 | 38 | 6 | 5 | 130.5 | 170 | 6.400 | 5.65 |
| M 135 × 2 | A 5500.2701 | A 5500.2702 | 131.1 | A 5500.2705 | 204 | 38 | 6 | 5 | 135.5 | 175 | 6.600 | 5.90 |
| M 140 × 2 | A 5500.2801 | A 5500.2802 | 136.1 | A 5500.2805 | 208 | 38 | 7 | 5 | 140.5 | 180 | 6.800 | 6.00 |
| M 145 × 2 | A 5500.2901 | A 5500.2902 | 141.1 | A 5500.2905 | 214 | 39 | 7 | 5 | 145.5 | 186 | 7.300 | 6.50 |
| M 150 × 2 | A 5500.3001 | A 5500.3002 | 146.1 | A 5500.3005 | 220 | 39 | 7 | 5 | 150.5 | 191 | 7.500 | 6.60 |
| M 155 × 3 | A 5500.3101 | A 5500.3102 | 149.8 | A 5500.3105 | 226 | 39 | 7 | 5 | 155.5 | 198 | 8.100 | 6.95 |
| M 160 × 3 | A 5500.3201 | A 5500.3202 | 154.8 | A 5500.3205 | 232 | 40 | 7 | 6 | 160.5 | 204 | 8.600 | 7.60 |
| M 165 × 3 | A 5500.3301 | A 5500.3302 | 159.8 | A 5500.3305 | 238 | 40 | 7 | 6 | 165.5 | 209 | 8.900 | 7.90 |
| M 170 × 3 | A 5500.3401 | A 5500.3402 | 164.8 | A 5500.3405 | 244 | 41 | 7 | 6 | 170.5 | 215 | 9.400 | 8.40 |
| M 180 × 3 | A 5500.3601 | A 5500.3602 | 174.8 | A 5500.3605 | 256 | 41 | 7 | 6 | 180.5 | 227 | 10.300 | 9.15 |
| M 190 × 3 | A 5500.3801 | A 5500.3802 | 184.8 | A 5500.3805 | 270 | 42 | 8 | 7 | 191 | 239 | 11.500 | 10.5 |
| M 200 × 3 | A 5500.4001 | A 5500.4002 | 194.8 | A 5500.4005 | 282 | 43 | 8 | 8 | 201 | 251 | 12.500 | 11.5 |
| TR 205 × 4 | A 5500.4101 | A 5500.4102 | 200.2 | A 5500.4105 | 288 | 43 | 8 | 8 | 207 | 256 | 12.800 | 12.0 |
| TR 210 × 4 | A 5500.4201 | A 5500.4202 | 205.2 | A 5500.4205 | 294 | 44 | 8 | 9 | 212 | 262 | 13.400 | 12.5 |
| TR 215 × 4 | A 5500.4301 | A 5500.4302 | 210.2 | A 5500.4305 | 300 | 44 | 8 | 9 | 217 | 267 | 13.700 | 13.0 |
| TR 220 × 4 | A 5500.4401 | A 5500.4402 | 215.2 | A 5500.4405 | 306 | 44 | 8 | 9 | 222 | 273 | 14.400 | 13.5 |
| TR 225 × 4 | A 5500.4501 | A 5500.4502 | 220.2 | A 5500.4505 | 312 | 45 | 8 | 9 | 227 | 280 | 15.200 | 14.5 |
| TR 230 × 4 | A 5500.4601 | A 5500.4602 | 225.2 | A 5500.4605 | 318 | 45 | 8 | 9 | 232 | 285 | 15.500 | 14.5 |
| TR 235 × 4 | A 5500.4701 | A 5500.4702 | 230.2 | A 5500.4705 | 326 | 46 | 8 | 10 | 237 | 291 | 16.200 | 16.0 |
| TR 240 × 4 | A 5500.4801 | A 5500.4802 | 235.2 | A 5500.4805 | 330 | 46 | 9 | 10 | 242 | 296 | 16.500 | 16.0 |





| Thread DI *) (mm) | Article No. Right Hand | Article No. Left Hand | Plain Bore DI (mm) | Article No. Bore | OD DA (mm) | Height B (mm) | Projecting Length C (mm) | Stroke Smax. (mm) | Ring Piston (mm) ϕDKi | Ring Piston (mm) ϕDKa | Piston Area $A_K$ (mm²) | Weight (Steel) Ca. (kg) |
|---|---|---|---|---|---|---|---|---|---|---|---|---|
| TR 250 × 4 | A 5500.5001 | A 5500.5002 | 245.2 | A 5500.5005 | 342 | 46 | 9 | 10 | 252 | 307 | 17.600 | 17.5 |
| TR 260 × 4 | A 5500.5201 | A 5500.5202 | 255.2 | A 5500.5205 | 356 | 47 | 9 | 11 | 262 | 319 | 18.800 | 19.0 |
| TR 270 × 4 | A 5500.5401 | A 5500.5402 | 265.2 | A 5500.5405 | 368 | 48 | 9 | 12 | 272 | 330 | 19.800 | 20.5 |
| TR 280 × 4 | A 5500.5601 | A 5500.5602 | 275.2 | A 5500.5605 | 380 | 49 | 9 | 12 | 282 | 341 | 21.100 | 22.0 |
| TR 290 × 4 | A 5500.5801 | A 5500.5802 | 285.2 | A 5500.5805 | 390 | 49 | 9 | 13 | 292 | 353 | 22.400 | 22.5 |
| TR 300 × 4 | A 5500.6001 | A 5500.6002 | 295.2 | A 5500.6005 | 404 | 51 | 10 | 14 | 302 | 364 | 23.600 | 25.5 |
| TR 310 × 5 | A 5500.6201 | A 5500.6202 | 304.7 | A 5500.6205 | 416 | 52 | 10 | 14 | 312 | 375 | 24.900 | 27.0 |
| TR 320 × 5 | A 5500.6401 | A 5500.6402 | 314.7 | A 5500.6405 | 428 | 53 | 10 | 14 | 322 | 387 | 26.300 | 29.5 |
| TR 330 × 5 | A 5500.6601 | A 5500.6602 | 324.7 | A 5500.6605 | 438 | 53 | 10 | 14 | 332 | 397 | 27.000 | 30.0 |
| TR 340 × 5 | A 5500.6801 | A 5500.6802 | 334.7 | A 5500.6805 | 450 | 54 | 10 | 14 | 342 | 408 | 28.400 | 31.5 |
| TR 345 × 5 | A 5500.6901 | A 5500.6902 | 339.7 | A 5500.6905 | 456 | 54 | 10 | 14 | 347 | 414 | 29.400 | 32.5 |
| TR 350 × 5 | A 5500.7001 | A 5500.7002 | 344.7 | A 5500.7005 | 464 | 56 | 10 | 14 | 352 | 420 | 29.900 | 35.0 |
| TR 360 × 5 | A 5500.7201 | A 5500.7202 | 354.7 | A 5500.7205 | 472 | 56 | 10 | 15 | 362 | 431 | 31.300 | 35.5 |
| TR 365 × 5 | A 5500.7301 | A 5500.7302 | 359.7 | A 5500.7305 | 482 | 57 | 11 | 15 | 367 | 436 | 31.700 | 38.5 |
| TR 370 × 5 | A 5500.7401 | A 5500.7402 | 364.7 | A 5500.7405 | 486 | 57 | 11 | 16 | 372 | 442 | 32.800 | 39.0 |
| TR 380 × 5 | A 5500.7601 | A 5500.7602 | 374.7 | A 5500.7605 | 498 | 58 | 11 | 16 | 382 | 452 | 33.500 | 40.5 |
| TR 385 × 5 | A 5500.7701 | A 5500.7702 | 379.7 | A 5500.7705 | 504 | 58 | 11 | 16 | 387 | 459 | 34.700 | 41.0 |
| TR 400 × 5 | A 5500.8001 | A 5500.8002 | 394.7 | A 5500.8005 | 522 | 60 | 11 | 17 | 402 | 475 | 36.700 | 45.5 |
| TR 410 × 5 | A 5500.8201 | A 5500.8202 | 404.7 | A 5500.8205 | 534 | 61 | 11 | 17 | 412 | 486 | 38.300 | 48.0 |
| TR 420 × 5 | A 5500.8401 | A 5500.8402 | 414.7 | A 5500.8405 | 546 | 61 | 11 | 17 | 422 | 498 | 40.000 | 50.0 |
| TR 430 × 5 | A 5500.8601 | A 5500.8602 | 424.7 | A 5500.8605 | 556 | 62 | 11 | 17 | 432 | 508 | 40.800 | 52.5 |
| TR 440 × 5 | A 5500.8801 | A 5500.8802 | 434.7 | A 5500.8805 | 566 | 62 | 12 | 17 | 442 | 519 | 42.500 | 54.0 |
| TR 450 × 5 | A 5500.9001 | A 5500.9002 | 444.7 | A 5500.9005 | 580 | 64 | 12 | 17 | 452 | 530 | 44.100 | 57.5 |
| TR 460 × 5 | A 5500.9201 | A 5500.9202 | 454.7 | A 5500.9205 | 590 | 64 | 12 | 17 | 462 | 541 | 45.100 | 60 |
| TR 470 × 5 | A 5500.9401 | A 5500.9402 | 464.7 | A 5500.9405 | 602 | 65 | 12 | 18 | 472 | 552 | 46.900 | 62 |
| TR 480 × 5 | A 5500.9601 | A 5500.9602 | 474.7 | A 5500.9605 | 612 | 65 | 12 | 19 | 482 | 563 | 48.600 | 63 |
| TR 490 × 5 | A 5500.9801 | A 5500.9802 | 484.7 | A 5500.9805 | 624 | 66 | 12 | 19 | 492 | 573 | 49.500 | 66 |
| TR 500 × 5 | A 5501.0001 | A 5501.0002 | 494.7 | A 5501.0005 | 636 | 67 | 12 | 19 | 502 | 585 | 51.500 | 70 |
| TR 510 × 6 | A 5501.0201 | A 5501.0202 | 503.7 | A 5501.0205 | 648 | 68 | 12 | 20 | 512 | 595 | 53.300 | 74 |
| TR 520 × 6 | A 5501.0401 | A 5501.0402 | 513.7 | A 5501.0405 | 658 | 68 | 13 | 20 | 522 | 606 | 54.300 | 75 |
| TR 530 × 6 | A 5501.0601 | A 5501.0602 | 523.7 | A 5501.0605 | 670 | 69 | 13 | 21 | 532 | 617 | 56.200 | 79 |
| TR 540 × 6 | A 5501.0801 | A 5501.0802 | 533.7 | A 5501.0805 | 682 | 69 | 13 | 21 | 542 | 629 | 58.200 | 81 |
| TR 550 × 6 | A 5501.1001 | A 5501.1002 | 543.7 | A 5501.1005 | 693 | 70 | 13 | 21 | 552 | 639 | 59.200 | 84 |
| TR 560 × 6 | A 5501.1201 | A 5501.1202 | 553.7 | A 5501.1205 | 704 | 71 | 13 | 22 | 562 | 650 | 61.200 | 88 |
| TR 570 × 6 | A 5501.1401 | A 5501.1402 | 563.7 | A 5501.1405 | 716 | 72 | 13 | 23 | 572 | 661 | 63.200 | 91 |
| TR 580 × 6 | A 5501.1601 | A 5501.1602 | 573.7 | A 5501.1605 | 726 | 72 | 13 | 23 | 582 | 671 | 64.200 | 94 |

| Thread DI *) (mm) | Article No. | | Plain Bore DI (mm) | Article No. | OD DA (mm) | Height B (mm) | Projecting Length C (mm) | Stroke Smax. (mm) | Ring Piston (mm) | | Piston Area $A_k$ ($mm^2$) | Weight (Steel) Ca. (kg) |
|---|---|---|---|---|---|---|---|---|---|---|---|---|
| | Right Hand | Left Hand | | Bore | | | | | ϕDki | ϕDka | | |
| TR 600 × 6 | A 5501.2001 | A 5501.2002 | 593.7 | A 5501.2005 | 748 | 73 | 13 | 23 | 602 | 693 | 67.300 | 100 |
| TR 630 × 6 | A 5501.2601 | A 5501.2602 | 623.7 | A 5501.2605 | 782 | 74 | 14 | 23 | 632 | 726 | 72.900 | 110 |
| TR 650 × 6 | A 5501.3001 | A 5501.3002 | 643.7 | A 5501.3005 | 804 | 75 | 14 | 23 | 652 | 747 | 76.200 | 115 |
| TR 670 × 6 | A 5501.3401 | A 5501.3402 | 663.7 | A 5501.3405 | 826 | 76 | 14 | 24 | 672 | 768 | 79.500 | 120 |
| TR 690 × 6 | A 5501.3801 | A 5501.3802 | 683.7 | A 5501.3805 | 848 | 77 | 14 | 25 | 692 | 791 | 84.200 | 127 |
| TR 710 × 7 | A 5501.4201 | A 5501.4202 | 702.7 | A 5501.4205 | 870 | 78 | 15 | 25 | 712 | 812 | 87.700 | 135 |
| TR 750 × 7 | A 5501.5001 | A 5501.5002 | 742.7 | A 5501.5005 | 912 | 79 | 15 | 25 | 752 | 855 | 95.200 | 146 |
| TR 800 × 7 | A 5501.6001 | A 5501.6002 | 792.7 | A 5501.6005 | 965 | 80 | 16 | 25 | 802 | 908 | 103.900 | 161 |
| TR 850 × 7 | A 5501.7001 | A 5501.7002 | 842.7 | A 5501.7005 | 1020 | 83 | 16 | 26 | 852 | 962 | 114.600 | 181 |
| TR 900 × 7 | A 5501.8001 | A 5501.8002 | 892.7 | A 5501.8005 | 1075 | 86 | 17 | 30 | 902 | 1015 | 124.100 | 205 |
| TR 950 × 8 | A 5501.9001 | A 5501.9002 | 941.7 | A 5501.9005 | 1126 | 86 | 17 | 30 | 952 | 1069 | 135.700 | 218 |
| TR 1000 × 8 | A 5502.0001 | A 5502.0002 | 991.7 | A 5502.0005 | 1180 | 88 | 17 | 34 | 1002 | 1122 | 145.800 | 239 |





# Convenient HLB Locking Nuts for Bearings

## Hydraulic Nuts A 5500 and A 5501 with metric thread and Plain bore

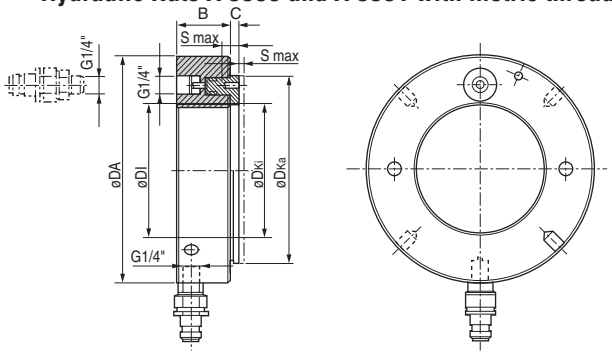


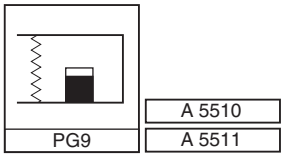


$$F = \frac{A \cdot p}{10.000}$$

F: Mounting or Dismounting Force (KN)
A: Piston Area ($mm^2$)
p: Oil Pressure (bar)
Max. 1000 bar

| Thread DI *) (mm) | Article No. | | Plain Bore DI (mm) | Article No. | OD DA (mm) | Height B (mm) | Projecting Length C (mm) | Stroke Smax. (mm) | Ring Piston (mm) | | Piston Area $A_k$ ($mm^2$) | Weight (Steel) Ca. (kg) |
|---|---|---|---|---|---|---|---|---|---|---|---|---|
| | Right Hand | Left Hand | | Bore | | | | | ϕDki | ϕDka | | |
| M 50 × 1.5 | A 5510.1001 | A 5510.1002 | 46.7 | A 5510.1005 | 114 | 38 | 4 | 5 | 50.5 | 104 | 2.900 | 2.70 |
| M 55 × 2 | A 5510.1101 | A 5510.1102 | 51.1 | A 5510.1105 | 120 | 38 | 4 | 5 | 55.5 | 109 | 3.150 | 2.75 |
| M 60 × 2 | A 5510.1201 | A 5510.1202 | 56.1 | A 5510.1205 | 125 | 38 | 5 | 5 | 60.5 | 115 | 3.300 | 2.80 |
| M 65 × 2 | A 5510.1301 | A 5510.1302 | 61.1 | A 5510.1305 | 130 | 38 | 5 | 5 | 65.5 | 121 | 3.600 | 3.00 |
| M 70 × 2 | A 5510.1401 | A 5510.1402 | 66.1 | A 5510.1405 | 135 | 38 | 5 | 5 | 70.5 | 127 | 3.800 | 3.20 |
| M 75 × 2 | A 5510.1501 | A 5510.1502 | 71.1 | A 5510.1505 | 140 | 38 | 5 | 5 | 75.5 | 132 | 4.000 | 3.40 |
| M 80 × 2 | A 5510.1601 | A 5510.1602 | 76.1 | A 5510.1605 | 146 | 38 | 5 | 5 | 80.5 | 137 | 4.200 | 3.70 |
| M 85 × 2 | A 5510.1701 | A 5510.1702 | 81.1 | A 5510.1705 | 150 | 38 | 5 | 5 | 85.5 | 142 | 4.400 | 3.75 |
| M 90 × 2 | A 5510.1801 | A 5510.1802 | 86.1 | A 5510.1805 | 156 | 38 | 5 | 5 | 90.5 | 147 | 4.700 | 4.00 |
| M 95 × 2 | A 5510.1901 | A 5510.1902 | 91.1 | A 5510.1905 | 162 | 38 | 5 | 5 | 95.5 | 153 | 4.900 | 4.30 |
| M 100 × 2 | A 5510.2001 | A 5510.2002 | 96.1 | A 5510.2005 | 166 | 38 | 6 | 5 | 100.5 | 158 | 5.100 | 4.40 |
| M 105 × 2 | A 5510.2101 | A 5510.2102 | 101.1 | A 5510.2105 | 172 | 38 | 6 | 5 | 105.5 | 163 | 5.300 | 4.65 |
| M 110 × 2 | A 5510.2201 | A 5510.2202 | 106.1 | A 5510.2205 | 178 | 38 | 6 | 5 | 110.5 | 169 | 5.600 | 4.95 |
| M 115 × 2 | A 5510.2301 | A 5510.2302 | 111.1 | A 5510.2305 | 182 | 38 | 6 | 5 | 115.5 | 174 | 5.800 | 5.00 |
| M 120 × 2 | A 5510.2401 | A 5510.2402 | 116.1 | A 5510.2405 | 188 | 38 | 6 | 5 | 120.5 | 179 | 6.000 | 5.25 |
| M 125 × 2 | A 5510.2501 | A 5510.2502 | 121.1 | A 5510.2505 | 192 | 38 | 6 | 5 | 125.5 | 184 | 6.200 | 5.35 |
| M 130 × 2 | A 5510.2601 | A 5510.2602 | 126.1 | A 5510.2605 | 198 | 38 | 6 | 5 | 130.5 | 190 | 6.400 | 5.65 |
| M 135 × 2 | A 5510.2701 | A 5510.2702 | 131.1 | A 5510.2705 | 204 | 38 | 6 | 5 | 135.5 | 195 | 6.600 | 5.90 |
| M 140 × 2 | A 5510.2801 | A 5510.2802 | 136.1 | A 5510.2805 | 208 | 38 | 7 | 5 | 140.5 | 200 | 6.800 | 6.00 |
| M 145 × 2 | A 5510.2901 | A 5510.2902 | 141.1 | A 5510.2905 | 214 | 39 | 7 | 5 | 145.5 | 206 | 7.300 | 6.50 |
| M 150 × 2 | A 5510.3001 | A 5510.3002 | 146.1 | A 5510.3005 | 220 | 39 | 7 | 5 | 150.5 | 211 | 7.500 | 6.60 |
| M 155 × 3 | A 5510.3101 | A 5510.3102 | 149.8 | A 5510.3105 | 226 | 39 | 7 | 5 | 155.5 | 218 | 8.100 | 6.95 |
| M 160 × 3 | A 5510.3201 | A 5510.3202 | 154.8 | A 5510.3205 | 232 | 40 | 7 | 6 | 160.5 | 224 | 8.600 | 7.60 |
| M 165 × 3 | A 5510.3301 | A 5510.3302 | 159.8 | A 5510.3305 | 238 | 40 | 7 | 6 | 165.5 | 229 | 8.900 | 7.90 |
| M 170 × 3 | A 5510.3401 | A 5510.3402 | 164.8 | A 5510.3405 | 244 | 41 | 7 | 6 | 170.5 | 235 | 9.400 | 8.40 |
| M 180 × 3 | A 5510.3601 | A 5510.3602 | 174.8 | A 5510.3605 | 256 | 41 | 7 | 6 | 180.5 | 247 | 10.300 | 9.15 |
| M 190 × 3 | A 5510.3801 | A 5510.3802 | 184.8 | A 5510.3805 | 270 | 42 | 8 | 7 | 191 | 259 | 11.500 | 10.5 |
| M 200 × 3 | A 5510.4001 | A 5510.4002 | 194.8 | A 5510.4005 | 282 | 43 | 8 | 8 | 201 | 271 | 12.500 | 11.5 |
| TR 205 × 4 | A 5510.4101 | A 5510.4102 | 200.2 | A 5510.4105 | 288 | 43 | 8 | 8 | 207 | 276 | 12.800 | 12.0 |
| TR 210 × 4 | A 5510.4201 | A 5510.4202 | 205.2 | A 5510.4205 | 294 | 44 | 8 | 9 | 212 | 282 | 13.400 | 12.5 |
| TR 215 × 4 | A 5510.4301 | A 5510.4302 | 210.2 | A 5500.4305 | 300 | 44 | 8 | 9 | 217 | 287 | 13.700 | 13.0 |
| TR 220 × 4 | A 5510.4401 | A 5510.4402 | 215.2 | A 5510.4405 | 306 | 44 | 8 | 9 | 222 | 293 | 14.400 | 13.5 |
| TR 225 × 4 | A 5510.4501 | A 5510.4502 | 220.2 | A 5510.4505 | 312 | 45 | 8 | 9 | 227 | 300 | 15.200 | 14.5 |
| TR 230 × 4 | A 5510.4601 | A 5510.4602 | 225.2 | A 5510.4605 | 318 | 45 | 8 | 9 | 232 | 305 | 15.500 | 14.5 |
| TR 235 × 4 | A 5510.4701 | A 5510.4702 | 230.2 | A 5510.4705 | 326 | 46 | 8 | 10 | 237 | 311 | 16.200 | 16.0 |
| TR 240 × 4 | A 5510.4801 | A 5510.4802 | 235.2 | A 5510.4805 | 330 | 46 | 9 | 10 | 242 | 316 | 16.500 | 16.0 |

| Thread DI *) (mm) | Article No. | | Plain Bore DI (mm) | Article No. | OD DA (mm) | Height B (mm) | Projecting Length C (mm) | Stroke Smax. (mm) | Ring Piston (mm) | | Piston Area $A_k$ ($mm^2$) | Weight (Steel) Ca. (kg) |
|---|---|---|---|---|---|---|---|---|---|---|---|---|
| | Right Hand | Left Hand | | Bore | | | | | $\phi D_{Ki}$ | $\phi D_{Ka}$ | | |
| TR 250 × 4 | A 5510.5001 | A 5510.5002 | 245.2 | A 5510.5005 | 342 | 46 | 9 | 10 | 252 | 329 | 17.600 | 17.5 |
| TR 260 × 4 | A 5510.5201 | A 5510.5202 | 255.2 | A 5510.5205 | 356 | 47 | 9 | 11 | 262 | 341 | 18.800 | 19.0 |
| TR 270 × 4 | A 5510.5401 | A 5510.5402 | 265.2 | A 5510.5405 | 368 | 48 | 9 | 12 | 272 | 352 | 19.800 | 20.5 |
| TR 280 × 4 | A 5510.5601 | A 5510.5602 | 275.2 | A 5510.5605 | 380 | 49 | 9 | 12 | 282 | 363 | 21.100 | 22.0 |
| TR 290 × 4 | A 5510.5801 | A 5510.5802 | 285.2 | A 5510.5805 | 390 | 49 | 9 | 13 | 292 | 375 | 22.400 | 22.5 |
| TR 300 × 4 | A 5510.6001 | A 5510.6002 | 295.2 | A 5510.6005 | 404 | 51 | 10 | 14 | 302 | 386 | 23.600 | 25.5 |
| TR 310 × 5 | A 5510.6201 | A 5510.6202 | 304.7 | A 5510.6205 | 416 | 52 | 10 | 14 | 312 | 397 | 24.900 | 27.0 |
| TR 320 × 5 | A 5510.6401 | A 5510.6402 | 314.7 | A 5510.6405 | 428 | 53 | 10 | 14 | 322 | 409 | 26.300 | 29.5 |
| TR 330 × 5 | A 5510.6601 | A 5510.6602 | 324.7 | A 5510.6605 | 438 | 53 | 10 | 14 | 332 | 419 | 27.000 | 30.0 |
| TR 340 × 5 | A 5510.6801 | A 5510.6802 | 334.7 | A 5510.6805 | 450 | 54 | 10 | 14 | 342 | 430 | 28.400 | 31.5 |
| TR 345 × 5 | A 5510.6901 | A 5510.6902 | 339.7 | A 5510.6905 | 456 | 54 | 10 | 14 | 347 | 436 | 29.400 | 32.5 |
| TR 350 × 5 | A 5510.7001 | A 5510.7002 | 344.7 | A 5510.7005 | 464 | 56 | 10 | 14 | 352 | 442 | 29.900 | 35.0 |
| TR 360 × 5 | A 5510.7201 | A 5510.7202 | 354.7 | A 5510.7205 | 472 | 56 | 10 | 15 | 362 | 455 | 31.300 | 35.5 |
| TR 365 × 5 | A 5510.7301 | A 5510.7302 | 359.7 | A 5510.7305 | 482 | 57 | 11 | 15 | 367 | 460 | 31.700 | 38.5 |
| TR 370 × 5 | A 5510.7401 | A 5510.7402 | 364.7 | A 5510.7405 | 486 | 57 | 11 | 16 | 372 | 466 | 32.800 | 39.0 |
| TR 380 × 5 | A 5510.7601 | A 5510.7602 | 374.7 | A 5510.7605 | 498 | 58 | 11 | 16 | 382 | 476 | 33.500 | 40.5 |
| TR 385 × 5 | A 5510.7701 | A 5510.7702 | 379.7 | A 5510.7705 | 504 | 58 | 11 | 16 | 387 | 483 | 34.700 | 41.0 |
| TR 400 × 5 | A 5510.8001 | A 5510.8002 | 394.7 | A 5510.8005 | 522 | 60 | 11 | 17 | 402 | 499 | 36.700 | 45.5 |
| TR 410 × 5 | A 5510.8201 | A 5510.8202 | 404.7 | A 5510.8205 | 534 | 61 | 11 | 17 | 412 | 510 | 38.300 | 48.0 |
| TR 420 × 5 | A 5510.8401 | A 5510.8402 | 414.7 | A 5510.8405 | 546 | 61 | 11 | 17 | 422 | 522 | 40.000 | 50.0 |
| TR 430 × 5 | A 5510.8601 | A 5510.8602 | 424.7 | A 5510.8605 | 556 | 62 | 11 | 17 | 432 | 532 | 40.800 | 52.5 |
| TR 440 × 5 | A 5510.8801 | A 5510.8802 | 434.7 | A 5510.8805 | 566 | 62 | 12 | 17 | 442 | 543 | 42.500 | 54.0 |
| TR 450 × 5 | A 5510.9001 | A 5510.9002 | 444.7 | A 5510.9005 | 580 | 64 | 12 | 17 | 452 | 554 | 44.100 | 57.5 |
| TR 460 × 5 | A 5510.9201 | A 5510.9202 | 454.7 | A 5510.9205 | 590 | 64 | 12 | 17 | 462 | 565 | 45.100 | 60 |
| TR 470 × 5 | A 5510.9401 | A 5510.9402 | 464.7 | A 5510.9405 | 602 | 65 | 12 | 18 | 472 | 576 | 46.900 | 62 |
| TR 480 × 5 | A 5500.9601 | A 5500.9602 | 474.7 | A 5500.9605 | 612 | 65 | 12 | 19 | 482 | 563 | 48.600 | 63 |
| TR 490 × 5 | A 5500.9801 | A 5500.9802 | 484.7 | A 5500.9805 | 624 | 66 | 12 | 19 | 492 | 573 | 49.500 | 66 |
| TR 500 × 5 | A 5501.0001 | A 5501.0002 | 494.7 | A 5501.0005 | 636 | 67 | 12 | 19 | 502 | 585 | 51.500 | 70 |
| TR 510 × 6 | A 5501.0201 | A 5501.0202 | 503.7 | A 5501.0205 | 648 | 68 | 12 | 20 | 512 | 595 | 53.300 | 74 |
| TR 520 × 6 | A 5501.0401 | A 5501.0402 | 513.7 | A 5501.0405 | 658 | 68 | 13 | 20 | 522 | 606 | 54.300 | 75 |
| TR 530 × 6 | A 5501.0601 | A 5501.0602 | 523.7 | A 5501.0605 | 670 | 69 | 13 | 21 | 532 | 617 | 56.200 | 79 |
| TR 540 × 6 | A 5501.0801 | A 5501.0802 | 533.7 | A 5501.0805 | 682 | 69 | 13 | 21 | 542 | 629 | 58.200 | 81 |
| TR 550 × 6 | A 5501.1001 | A 5501.1002 | 543.7 | A 5501.1005 | 693 | 70 | 13 | 21 | 552 | 639 | 59.200 | 84 |
| TR 560 × 6 | A 5501.1201 | A 5501.1202 | 553.7 | A 5501.1205 | 704 | 71 | 13 | 22 | 562 | 650 | 61.200 | 88 |
| TR 570 × 6 | A 5501.1401 | A 5501.1402 | 563.7 | A 5501.1405 | 716 | 72 | 13 | 23 | 572 | 661 | 63.200 | 91 |
| TR 580 × 6 | A 5501.1601 | A 5501.1602 | 573.7 | A 5501.1605 | 726 | 72 | 13 | 23 | 582 | 671 | 64.200 | 94 |





| Thread DI *) (mm) | Article No. | | Plain Bore DI (mm) | Article No. | OD DA (mm) | Height B (mm) | Projecting Length C (mm) | Stroke Smax. (mm) | Ring Piston (mm) | | Piston Area $A_k$ ($mm^2$) | Weight (Steel) Ca. (kg) |
|---|---|---|---|---|---|---|---|---|---|---|---|---|
| | Right Hand | Left Hand | | Bore | | | | | $\phi D_{Ki}$ | $\phi D_{Ka}$ | | |
| TR 600 × 6 | A 5501.2001 | A 5501.2002 | 593.7 | A 5501.2005 | 748 | 73 | 13 | 23 | 602 | 693 | 67.300 | 100 |
| TR 630 × 6 | A 5501.2601 | A 5501.2602 | 623.7 | A 5501.2605 | 782 | 74 | 14 | 23 | 632 | 726 | 72.900 | 110 |
| TR 650 × 6 | A 5501.3001 | A 5501.3002 | 643.7 | A 5501.3005 | 804 | 75 | 14 | 23 | 652 | 747 | 76.200 | 115 |
| TR 670 × 6 | A 5501.3401 | A 5501.3402 | 663.7 | A 5501.3405 | 826 | 76 | 14 | 24 | 672 | 768 | 79.500 | 120 |
| TR 690 × 6 | A 5501.3801 | A 5501.3802 | 683.7 | A 5501.3805 | 848 | 77 | 14 | 25 | 692 | 791 | 84.200 | 127 |
| TR 710 × 7 | A 5501.4201 | A 5501.4202 | 702.7 | A 5501.4205 | 870 | 78 | 15 | 25 | 712 | 812 | 87.700 | 135 |
| TR 750 × 7 | A 5501.5001 | A 5501.5002 | 742.7 | A 5501.5005 | 912 | 79 | 15 | 25 | 752 | 855 | 95.200 | 146 |
| TR 800 × 7 | A 5501.6001 | A 5501.6002 | 792.7 | A 5501.6005 | 965 | 80 | 16 | 25 | 802 | 908 | 103.900 | 161 |
| TR 850 × 7 | A 5501.7001 | A 5501.7002 | 842.7 | A 5501.7005 | 1020 | 83 | 16 | 26 | 852 | 962 | 114.600 | 181 |
| TR 900 × 7 | A 5501.8001 | A 5501.8002 | 892.7 | A 5501.8005 | 1075 | 86 | 17 | 30 | 902 | 1015 | 124.100 | 205 |
| TR 950 × 8 | A 5501.9001 | A 5501.9002 | 941.7 | A 5501.9005 | 1126 | 86 | 17 | 30 | 952 | 1069 | 135.700 | 218 |
| TR 1000 × 8 | A 5502.0001 | A 5502.0002 | 991.7 | A 5502.0005 | 1180 | 88 | 17 | 34 | 1002 | 1122 | 145.800 | 239 |

# Convenient HLB Locking Nuts for Bearings

## Hydraulic Nuts A 5500 and A 5501 with imperial screw thread (UN or ACME thread form)

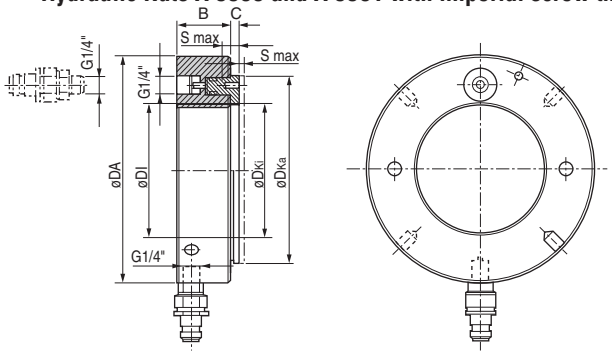


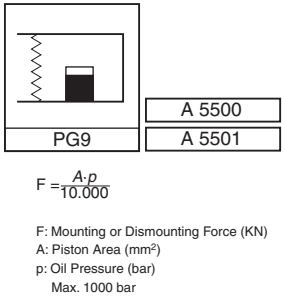




$$F = \frac{A \cdot p}{10.000}$$

F: Mounting or Dismounting Force (KN)
A: Piston Area ($mm^2$)
p: Oil Pressure (bar)
Max. 1000 bar

| Thread DI *) | Article No. | | OD DA (mm) | Height B (mm) | Projecting Length C (mm) | Stroke Smax. (mm) | Ring Piston (mm) | | Piston Area $A_k$ ($mm^2$) | Weight (Steel) Ca. (kg) |
|---|---|---|---|---|---|---|---|---|---|---|
| | Right Hand | Left Hand | | | | | ϕDKi | ϕDKa | | |
| UN 1.967-18TPI | A 5500.1003 | A 5500.1004 | 114 | 38 | 4 | 5 | 50.5 | 85 | 2.900 | 2.70 |
| UN 2.157-18TPI | A 5500.1103 | A 5500.1104 | 120 | 38 | 4 | 5 | 55.5 | 90 | 3.150 | 2.75 |
| UN 2.360-18TPI | A 5500.1203 | A 5500.1204 | 125 | 38 | 5 | 5 | 60.5 | 95 | 3.300 | 2.80 |
| UN 2.548-18TPI | A 5500.1303 | A 5500.1304 | 130 | 38 | 5 | 5 | 65.5 | 101 | 3.600 | 3.00 |
| UN 2.751-18TPI | A 5500.1403 | A 5500.1404 | 135 | 38 | 5 | 5 | 70.5 | 107 | 3.800 | 3.25 |
| UN 2.933-12TPI | A 5500.1503 | A 5500.1504 | 140 | 38 | 5 | 5 | 75.5 | 112 | 4.000 | 3.40 |
| UN 3.137-12TPI | A 5500.1603 | A 5500.1604 | 146 | 38 | 5 | 5 | 80.5 | 117 | 4.200 | 3.75 |
| UN 3.340-12TPI | A 5500.1703 | A 5500.1704 | 150 | 38 | 5 | 5 | 85.5 | 122 | 4.400 | 3.80 |
| UN 3.527-12TPI | A 5500.1803 | A 5500.1804 | 156 | 38 | 5 | 5 | 90.5 | 127 | 4.700 | 4.00 |
| UN 3.730-12TPI | A 5500.1903 | A 5500.1904 | 162 | 38 | 5 | 5 | 95.5 | 133 | 4.900 | 4.30 |
| UN 3.918-12TPI | A 5500.2003 | A 5500.2004 | 166 | 38 | 6 | 5 | 100.5 | 138 | 5.100 | 4.40 |
| UN 4.122-12TPI | A 5500.2103 | A 5500.2104 | 172 | 38 | 6 | 5 | 105.5 | 143 | 5.300 | 4.70 |
| UN 4.325-12TPI | A 5500.2203 | A 5500.2204 | 178 | 38 | 6 | 5 | 110.5 | 149 | 5.600 | 4.95 |
| UN 4.716-12TPI | A 5500.2403 | A 5500.2404 | 188 | 38 | 6 | 5 | 120.5 | 159 | 6.000 | 5.25 |
| UN 5.106-12TPI | A 5500.2603 | A 5500.2604 | 198 | 38 | 6 | 5 | 130.5 | 170 | 6.400 | 5.65 |
| UN 5.497-12TPI | A 5500.2803 | A 5500.2804 | 208 | 38 | 7 | 5 | 140.5 | 180 | 6.800 | 6.00 |
| UN 5.888-12TPI | A 5500.3003 | A 5500.3004 | 220 | 39 | 7 | 5 | 150.5 | 191 | 7.500 | 6.60 |
| UN 6.284-8TPI | A 5500.3203 | A 5500.3204 | 232 | 40 | 7 | 6 | 160.5 | 204 | 8.600 | 7.60 |
| UN 6.659-8TPI | A 5500.3403 | A 5500.3404 | 244 | 41 | 7 | 6 | 170.5 | 215 | 9.400 | 8.40 |
| UN 7.066-8TPI | A 5500.3603 | A 5500.3604 | 256 | 41 | 7 | 6 | 180.5 | 227 | 10.300 | 9.15 |
| UN 7.472-8TPI | A 5500.3803 | A 5500.3804 | 270 | 42 | 8 | 7 | 191 | 239 | 11.500 | 10.5 |
| UN 7.847-8TPI | A 5500.4003 | A 5500.4004 | 282 | 43 | 8 | 8 | 201 | 251 | 12.500 | 11.5 |
| UN 8.628-8TPI | A 5500.4403 | A 5500.4404 | 306 | 44 | 8 | 9 | 222 | 273 | 14.400 | 13.5 |
| UN 9.442-6TPI | A 5500.4803 | A 5500.4804 | 330 | 46 | 9 | 10 | 242 | 296 | 16.500 | 16.0 |





| Thread DI *) | Article No. | | OD DA (mm) | Height B (mm) | Projecting Length C (mm) | Stroke Smax. (mm) | Ring Piston (mm) | | Piston Area $A_k$ ($mm^2$) | Weight (Steel) Ca. (kg) |
|---|---|---|---|---|---|---|---|---|---|---|
| | Right Hand | Left Hand | | | | | ϕDKi | ϕDKa | | |
| UN 10.192-6TPI | A 5500.5203 | A 5500.5204 | 356 | 47 | 9 | 11 | 262 | 319 | 18.800 | 19.0 |
| UN 11.004-6TPI | A 5500.5603 | A 5500.5604 | 380 | 49 | 9 | 12 | 282 | 341 | 21.100 | 22.0 |
| UN 11.785-6TPI | A 5500.6003 | A 5500.6004 | 404 | 51 | 10 | 14 | 302 | 364 | 23.600 | 25.5 |
| UN 12.562-6TPI | A 5500.6403 | A 5500.6404 | 428 | 53 | 10 | 14 | 322 | 387 | 26.300 | 29.5 |
| ACME 13.339-5TPI | A 5500.6803 | A 5500.6804 | 450 | 54 | 10 | 14 | 342 | 408 | 28.400 | 31.5 |
| ACME 14.170-5TPI | A 5500.7203 | A 5500.7204 | 472 | 56 | 10 | 15 | 362 | 431 | 31.300 | 35.5 |
| ACME 14.957-5TPI | A 5500.7603 | A 5500.7604 | 498 | 58 | 11 | 16 | 382 | 452 | 33.500 | 40.5 |
| ACME 15.745-5TPI | A 5500.8003 | A 5500.8004 | 522 | 60 | 11 | 17 | 402 | 475 | 36.700 | 45.5 |
| ACME 16.532-5TPI | A 5500.8403 | A 5500.8404 | 546 | 61 | 11 | 17 | 422 | 498 | 40.000 | 50 |
| ACME 17.319-5TPI | A 5500.8803 | A 5500.8804 | 566 | 62 | 12 | 17 | 442 | 519 | 42.500 | 54 |
| ACME 18.107-5TPI | A 5500.9203 | A 5500.9204 | 590 | 64 | 12 | 17 | 462 | 541 | 45.100 | 60 |
| ACME 18.894-5TPI | A 5500.9603 | A 5500.9604 | 612 | 65 | 12 | 19 | 482 | 563 | 48.600 | 63 |
| ACME 19.682-5TPI | A 5501.0003 | A 5501.0004 | 636 | 67 | 12 | 19 | 502 | 585 | 51.500 | 70 |
| ACME 20.867-4TPI | A 5501.0603 | A 5501.0604 | 670 | 69 | 13 | 21 | 532 | 617 | 56.200 | 79 |
| ACME 22.048-4TPI | A 5501.1203 | A 5501.1204 | 704 | 71 | 13 | 22 | 562 | 650 | 61.200 | 88 |
| ACME 23.623-4TPI | A 5501.2003 | A 5501.2004 | 748 | 73 | 13 | 23 | 602 | 693 | 67.300 | 100 |
| ACME 24.804-4TPI | A 5501.2603 | A 5501.2604 | 782 | 74 | 14 | 23 | 632 | 726 | 72.900 | 110 |
| ACME 26.379-4TPI | A 5501.3403 | A 5501.3404 | 826 | 76 | 14 | 24 | 672 | 768 | 79.500 | 120 |
| ACME 27.961-3TPI | A 5501.4203 | A 5501.4204 | 870 | 78 | 15 | 25 | 712 | 812 | 87.700 | 135 |
| ACME 29.536-3TPI | A 5501.5003 | A 5501.5004 | 912 | 79 | 15 | 25 | 752 | 855 | 95.200 | 145 |
| ACME 31.504-3TPI | A 5501.6003 | A 5501.6004 | 965 | 80 | 16 | 25 | 802 | 908 | 103.900 | 160 |
| ACME 33.473-3TPI | A 5501.7003 | A 5501.7004 | 1020 | 83 | 16 | 26 | 852 | 962 | 114.600 | 180 |
| ACME 35.441-3TPI | A 5501.8003 | A 5501.8004 | 1075 | 86 | 17 | 30 | 902 | 1015 | 124.100 | 205 |
| ACME 37.410-3TPI | A 5501.9003 | A 5501.9004 | 1126 | 86 | 17 | 30 | 952 | 1069 | 135.700 | 220 |

NACHI

# Bearing Heater

## Ecological and High Functional Bearing Heater

### ● Use

When hydraulic tools or oil injection method cannot be used, the only alternative is often to heat the bearings or bearing rings before mounting or dismounting.
If heaters are correctly used they are excellent aids both for the occasional mounting or dismounting operation as well as for the regular requirements of line operation.

### ● Caution

Heating should always be done with care and it should be remembered that bearings should not be strongly heated and certainly not to temperatures above 120˚C.
Greased and sealed bearings should generally not be heated.

IHE0320, IHE0340
IHE0620, IHE0640

IHE0110
IHE0120

## Inverter Driven Bearing Heater Standard Specifications

| Items | detail items | | 1kVA100V | 1kVA200V | 3.3kVA | 3.3kVA | 6.6kVA | 6.6kVA | 11.8kVA | 11.8kVA | 23kVA | 23kVA |
|---|---|---|---|---|---|---|---|---|---|---|---|---|
| type | | | IHE0110 | IHE0120 | IHE0320 | IHE0340 | IHE0620 | IHE0640 | IHE1120 | IHE1140 | IHE2320 | IHE2340 |
| Heating Capacity | | | 1kVA | 1kVA | 3.3kVA | 3.3kVA | 6.6kVA | 6.6kVA | 11.8kVA | 11.8kVA | 23kVA | 23kVA |
| Applicable Bearing Size | Mimimal bore diameter (mmϕ) | | 20 | 20 | 35 | 35 | 35 | 35 | 50 | 50 | 50 | 50 |
| | Maximum outside diameter (mmϕ) | | 200 | 200 | 300 | 300 | 350 | 350 | 600 | 600 | 800 | 800 |
| | Thickness (mm) | | 70 | 70 | 110 | 110 | 200 | 200 | 300 | 300 | 400 | 400 |
| | Weight (kg) | | 12 | 12 | 40 | 40 | 80 | 80 | 300 | 300 | 600 | 600 |
| Heating Bearing type | Can heat pre-greased bearing | | Yes | | | | | | | | | |
| | Can heat sealed bearing | | Yes | | | | | | | | | |
| Power Supply Characteristics | Phase | | Single | Single | Three | Three | Three | Three | Three | Three | Three | Three |
| | Voltage (V) | | 100-120V | 200-240V | 200-240V | 380-480V | 200-240V | 380-480V | 200-240V | 380-480V | 200-240V | 380-480V |
| | Frequency | | 50/60Hz | 50/60Hz | 50/60Hz | 50/60Hz | 50/60Hz | 50/60Hz | 50/60Hz | 50/60Hz | 50/60Hz | 50/60Hz |
| | Input Current (A) (maximum) | | 16.1A | 9.7A | 12.8A | 7.5A | 30.0A | 16.1A | 56.9A | 29A | 97A | 49.6A |
| Dimensions of body | H (mm) | | 347 | 347 | 510 | 510 | 660 | 660 | 1230 | 1230 | 1435 | 1435 |
| | D (mm) | | 175 | 175 | 305 | 305 | 385 | 385 | 700 | 700 | 850 | 850 |
| | W (mm) | | 573 | 573 | 750 | 750 | 920 | 920 | 1250 | 1250 | 1600 | 1600 |
| | Total weight (kg) | | 14 | 14 | 42 | 42 | 72 | 72 | 172 | 172 | 278 | 278 |
| Control Specifications | Temperature Control Mode | Range | 0 − 250˚C | | | | | | | | | |
| | | temp. sensor type | K-type | | | | | | | | | |
| | | Accuracy | 1˚C | | | | | | | | | |
| | Time Control Mode | Range | 0-60min | | | | | | | | | |
| | | Accuracy | 1s | | | | | | | | | |
| | Power Reduction | By 10% | 50-100% | | | | | | | | | |
| | Demagnetization | Accuracy | 300μT(3G) | | | | | | | | | |
| Operation Spec. | Operation | | Operator with LEDs | | | | | | | | | |
| | Sequence Operation | | Yes | | | | | | | | | |
| Temp. Display | Temp. Display | | Celsius/Fahrenheit | | | | | | | | | |
| Environment specifications | Application site | Application site | Indoor (no corrosive gas,dust,etc) | | | | | | | | | |
| | | Overvoltage Category | 2 | 2 | 3 | 3 | 3 | 3 | 3 | 3 | 3 | 3 |
| | | Pollution Degree | 2 | 2 | 2 | 2 | 2 | 2 | 2 | 2 | 2 | 2 |
| | Ambient Operating Temp. | | − 10˚C ～ 35˚C | | | | | | | | | |
| | Altitude | | 2000m max | | | | | | | | | |
| | Ambient Operating Humidity. | | 92% RH max | | | | | | | | | |
| I-type core | N-CI-1815 | (bore diameter 20 ～ 35) | ● | ● | | | | | | | | |
| | N-CI-1825 | (bore diameter 35 ～ 50) | ● | ● | | | | | | | | |
| | N-CI-1835 | (bore diameter 50above) | ● | ● | | | | | | | | |
| | N-CI-2525 | (bore diameter 35 ～ 50) | | | ● | ● | | | | | | |
| | N-CI-2535 | (bore diameter 50 ～ 70) | | | ● | ● | | | | | | |
| | N-CI-2545 | (bore diameter 70above) | | | ● | ● | | | | | | |
| | N-CI-3725 | (bore diameter 35 ～ 50) | | | | | ● | ● | | | | |
| | N-CI-3735 | (bore diameter 50 ～ 80) | | | | | ● | ● | | | | |
| | N-CI-3755 | (bore diameter 80above) | | | | | ● | ● | | | | |
| | N-CI-5235 | (bore diameter 50 ～ 80) | | | | | | | ● | ● | | |
| | N-CI-5255 | (bore diameter 80 ～ 100) | | | | | | | ● | ● | | |
| | N-CI-5270 | (bore diameter 100above) | | | | | | | ● | ● | | |
| | N-CI-6735 | (bore diameter 50 ～ 80) | | | | | | | | | ● | ● |
| | N-CI-6755 | (bore diameter 80 ～ 130) | | | | | | | | | ● | ● |
| | N-CI-6785 | (bore diameter 130above) | | | | | | | | | ● | ● |
| temperature sensor | N-CTC-300 | length 300mm | ● | ● | | | | | | | | |
| | N-CTC-500 | length 500mm | | | ● | ● | ● | ● | | | | |
| | N-CTC-1000 | length 1000mm | | | | | | | ● | ● | ● | ● |

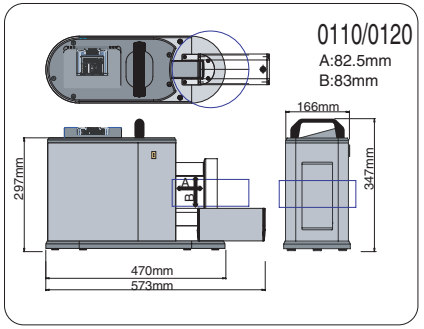


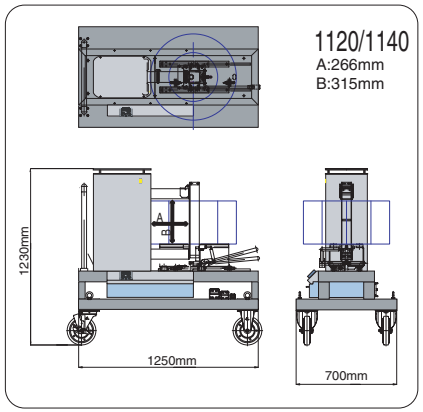


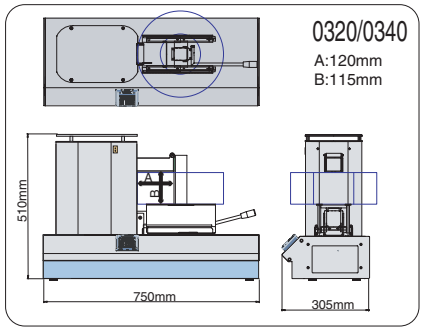


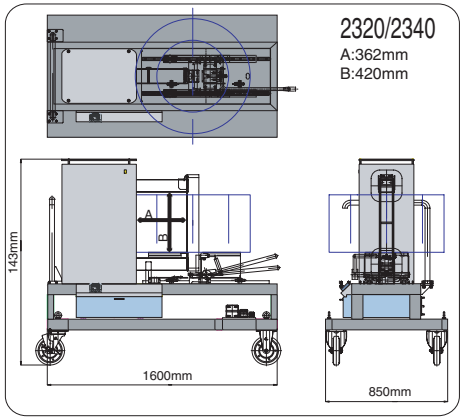


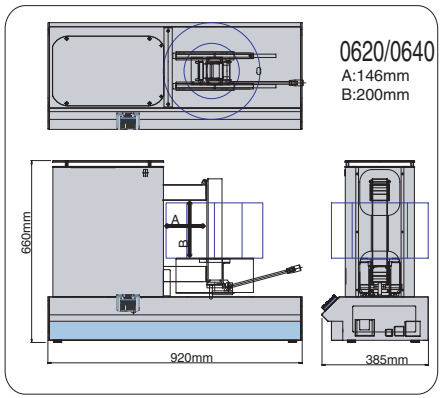






## Three Features

| | |
|---|---|
| Versatile and Wide Range Use | Induction Bearing Heater is designed mainly for heating up bearings. However, it can heat up bushings, gears, pulleys, couplings and other ring shaped objects. |
| Built-in Demagnetization Function | Induction Bearing Heater is all digitally controlled and demagnetizes bearings automatically after heating. Also, it can demagnetize bearings manually. |
| Temperature Control and Timer Control | Induction Bearing Heater has two control modes: Temperature Control Mode and Timer Control Mode. In Temperature Control Mode, Temperature can be set up to 250C as standard. Depending on region where it is used, temperature indication of Celsius can be changed to Fahrenheit and vice versa with Control Panel operation. Temperature retention function keeps bearing at the set temperature infinitely after it is reached until Stop is pressed. In Timer Control Mode, time can be set up to 60 minutes. |

## Three Advantages

| | |
|---|---|
| Even Heating without Damage to Bearing | Use of direct flame or blow torch to heat up bearings is hazardous, risky, and causes uneven thermal expansion and/or material alteration. Induction Bearing Heater adopts electromagnetic induction principle to heat bearing(s) evenly to be thermally expanded without any damage to bearing(s). This feature eliminates unnecessary trouble to improve work efficiency. |
| Quick and Efficient Heating without Fire | Induction Bearing Heater has exciting coils embedded into a core as primary winding as in a transformer. AC current flowing in the coils induces a secondary current around the inner ring of bearing to generate heat necessary for its expansion due to bearing's own electrical resistance. This leads to little waste of energy (low energy loss) and quick heating of bearing (work) only . The induction Heating Method of non-use of fire accomplishes High Safety, Reliability and Work Efficiency for drastic shortening of the time necessary for Shrink Fit Process. |
| Clean Heating without Impurities Intruded | The shrink fit process using an oil bath requires extra time and cost for cleaning after fitting bearing(work) even though new oil is used. Induction Bearing Heater, without the use of oil, enables heating cleanly even a grease sealed bearing that will retain original pre-lubrication inside bearing. This leads to improvement of working environment because no oil storage management is required. |

## Slide type Bearing Installation Table

Once bearing and I-type core are installed in Slide Type Bearing Installation Table, all you have to do is to move the table to the heating position along the guide by pushing the lever. This device enables easy mounting and dismounting of even a hot and/or heavy bearing.

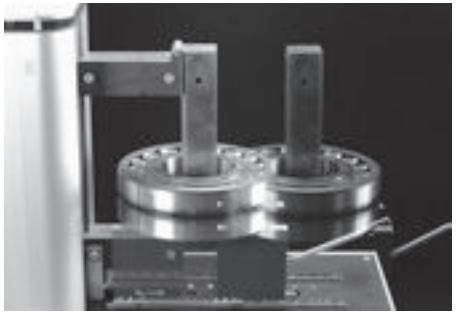

## Small and Sensitive Temperature Sensor

Small and sensitive temperature sensor continuously monitors the bearing temperature to ensure precise detection of bearing (work) temperature even at high temperature rising rate as well as when the sensor is set in a confined small area.

## Compatibility with a Wide Range of Various Voltage of Power Supply

ETOH's Induction Bearing Heater is compatible with a wide range of various voltages and various frequencies of power supplies around the globe. Stationary types of Bearing Heater are connected to 3-phase AC power Supply while portable types are connected to single phase AC power supply.

## Fault Tolerance

In the case of heating unwittingly without installing the temperature sensor on the work (bearing) and in any other abnormal incident that should happen, Bearing Heater detects the fault(s) to stop heating automatically. In this manner, for Safe Operation of Bearing Heater, all possible measures conceivable are taken.

## Operation Information Availability

Operation Panel is common to all types of ETOH's induction Bearing Heater and easy-to-use, user friendly, and can be operated instinctively at sight of the push-button symbols representing the individual elemental commands of Bearing Heater, as the result of our searching user's convenience. The external control signal inputs and outputs are equipped as standard and they allow Bearing Heater to be embedded into your FA system.

## Broad Range of Work Size

ETOH's induction Bearing Heater accommodates broad range of work (bearing) size by selecting I-type core suitable for the work inner ring diameter.

## Optimal Heating with Accordance with Bearing (work) Applied

ETOH's induction Bearing Heater senses the electrical properties of the work (bearing) and the I-type core to heat the work (bearing) in the optimal condition. ETOH's induction Bearing Heater is featured to have convenient Power Reduction Function of setting the reduction rate 50%-100% by 10% for a delicate work (bearing) necessary to be heated amply and slowly.

# Appendix Table


inch－mm Conversion Table ―― Table 1
kgf－N Conversion Table ―― Table 2
kg－lb Conversion Table ―― Table 3
˚C－˚F Conversion Table ―― Table 4
Hardness Conversion Table ―― Table 5
Tolerance of Shaft ―― Table 6
Tolerance of Housing Bore ―― Table 7
International Units SI Conversion Table ―― Table 8
SI Prefixes ―― Table 9
Lubricating Greases ―― Table 10




## ■ Table 1. inch－mm Conversion Table

| inch | | 0" | 1" | 2" | 3" | 4" | 5" | 6" | 7" | 8" |
|---|---|---|---|---|---|---|---|---|---|---|
| Fractions | Decimals | | | | | | | | | |
| 0 | .000000 | 0.0000 | 25.4000 | 50.8000 | 76.2000 | 101.6000 | 127.0000 | 152.4000 | 177.8000 | 203.2000 |
| 1/64 | .015625 | 0.3969 | 25.7969 | 51.1969 | 76.5969 | 101.9969 | 127.3969 | 152.7969 | 178.1969 | 203.5969 |
| 1/32 | .031250 | 0.7938 | 26.1938 | 51.5938 | 76.9938 | 102.3938 | 127.7938 | 153.1938 | 178.5938 | 203.9938 |
| 3/64 | .046875 | 1.1906 | 26.5906 | 51.9906 | 77.3906 | 102.7906 | 128.1906 | 153.5906 | 178.9906 | 204.3906 |
| 1/16 | .062500 | 1.5875 | 26.9875 | 52.3875 | 77.7875 | 103.1875 | 128.5875 | 153.9875 | 179.3875 | 204.7875 |
| 5/64 | .078125 | 1.9844 | 27.3844 | 52.7844 | 78.1844 | 103.5844 | 128.9844 | 154.3844 | 179.7844 | 205.1844 |
| 3/32 | .093750 | 2.3812 | 27.7812 | 53.1812 | 78.5812 | 103.9812 | 129.3812 | 154.7812 | 180.1812 | 205.5812 |
| 7/64 | .109375 | 2.7781 | 28.1781 | 53.5781 | 78.9781 | 104.3781 | 129.7781 | 155.1781 | 180.5781 | 205.9781 |
| 1/ 8 | .125000 | 3.1750 | 28.5750 | 53.9750 | 79.3750 | 104.7750 | 130.1750 | 155.5750 | 180.9750 | 206.3750 |
| 9/64 | .140625 | 3.5719 | 28.9719 | 54.3719 | 79.7719 | 105.1719 | 130.5719 | 155.9719 | 181.3719 | 206.7719 |
| 5/32 | .156250 | 3.9688 | 29.3688 | 54.7688 | 80.1688 | 105.5688 | 130.9688 | 156.3688 | 181.7688 | 207.1688 |
| 11/64 | .171875 | 4.3656 | 29.7656 | 55.1656 | 80.5656 | 105.9656 | 131.3656 | 156.7656 | 182.1656 | 207.5656 |
| 3/16 | .187500 | 4.7625 | 30.1625 | 55.5625 | 80.9625 | 106.3625 | 131.7625 | 157.1625 | 182.5625 | 207.9625 |
| 13/64 | .203125 | 5.1594 | 30.5594 | 55.9594 | 81.3594 | 106.7594 | 132.1594 | 157.5594 | 182.9594 | 208.3594 |
| 7/32 | .218750 | 5.5562 | 30.9562 | 56.3562 | 81.7562 | 107.1562 | 132.5562 | 157.9562 | 183.3562 | 208.7562 |
| 15/64 | .234375 | 5.9531 | 31.3531 | 56.7531 | 82.1531 | 107.5531 | 132.9531 | 158.3531 | 183.7531 | 209.1531 |
| 1/ 4 | .250000 | 6.3500 | 31.7500 | 57.1500 | 82.5500 | 107.9500 | 133.3500 | 158.7500 | 184.1500 | 209.5500 |
| 17/64 | .265625 | 6.7469 | 32.1469 | 57.5469 | 82.9469 | 108.3469 | 133.7469 | 159.1469 | 184.5469 | 209.9469 |
| 9/32 | .281250 | 7.1438 | 32.5438 | 57.9438 | 83.3438 | 108.7438 | 134.1438 | 159.5438 | 184.9438 | 210.3438 |
| 19/64 | .296875 | 7.5406 | 32.9406 | 58.3406 | 83.7406 | 109.1406 | 134.5406 | 159.9406 | 185.3406 | 210.7406 |
| 5/16 | .312500 | 7.9375 | 33.3375 | 58.7375 | 84.1375 | 109.5375 | 134.9375 | 160.3375 | 185.7375 | 211.1375 |
| 21/64 | .328125 | 8.3344 | 33.7344 | 59.1344 | 84.5344 | 109.9344 | 135.3344 | 160.7344 | 186.1344 | 211.5344 |
| 11/32 | .343750 | 8.7312 | 34.1312 | 59.5312 | 84.9312 | 110.3312 | 135.7312 | 161.1312 | 186.5312 | 211.9312 |
| 23/64 | .359375 | 9.1281 | 34.5281 | 59.9281 | 85.3281 | 110.1250 | 136.1281 | 161.5281 | 186.9281 | 212.3281 |
| 3/ 8 | .375000 | 9.5250 | 34.9250 | 60.3250 | 85.7250 | 111.1250 | 136.5250 | 161.9250 | 187.3250 | 212.7250 |
| 25/64 | .390625 | 9.9219 | 35.3219 | 60.7219 | 86.1219 | 111.5219 | 136.9219 | 162.3219 | 187.7219 | 213.1219 |
| 13/32 | .406250 | 10.3188 | 35.7188 | 61.1188 | 86.5188 | 111.9188 | 137.3188 | 162.7188 | 188.1188 | 213.5188 |
| 27/64 | .218875 | 10.7156 | 36.1156 | 61.5156 | 86.9156 | 112.3156 | 137.7156 | 163.1156 | 188.5156 | 213.9156 |
| 7/16 | .437500 | 11.1125 | 36.5125 | 61.9125 | 87.3125 | 112.7125 | 138.1125 | 163.5125 | 188.9125 | 214.3125 |
| 29/64 | .453125 | 11.5094 | 36.9094 | 62.3094 | 87.7094 | 113.1094 | 138.5094 | 163.9094 | 189.3094 | 214.7094 |
| 15/32 | .468750 | 11.9062 | 37.3062 | 62.7062 | 88.1062 | 113.5062 | 138.9062 | 164.3062 | 189.7062 | 215.1062 |
| 31/64 | .484375 | 12.3031 | 37.7031 | 63.1031 | 88.5031 | 113.9031 | 139.3031 | 164.7031 | 190.1031 | 215.5031 |
| 1/ 2 | .500000 | 12.7000 | 38.1000 | 63.5000 | 88.9000 | 114.3000 | 139.7000 | 165.1000 | 190.5000 | 215.9000 |
| 33/64 | .515625 | 13.0969 | 38.4969 | 63.8969 | 89.2969 | 114.6969 | 140.0969 | 165.4969 | 190.8969 | 216.2669 |
| 17/32 | .531250 | 13.4938 | 38.8938 | 64.2938 | 89.6938 | 115.0938 | 140.4938 | 165.8938 | 191.2938 | 216.6938 |
| 35/64 | .546875 | 13.8906 | 39.2906 | 64.6906 | 90.0906 | 115.4906 | 140.8906 | 166.2906 | 191.6906 | 217.0906 |
| 9/16 | .562500 | 14.2875 | 39.6875 | 65.0875 | 90.4875 | 115.8875 | 141.2875 | 166.6875 | 192.0875 | 217.4875 |
| 37/64 | .578125 | 14.6844 | 40.0844 | 65.4844 | 90.8844 | 116.2844 | 141.6844 | 167.0844 | 192.4844 | 217.8844 |
| 19/32 | .593750 | 15.0812 | 40.4812 | 65.8812 | 91.2812 | 116.6812 | 142.0812 | 167.4812 | 192.8812 | 218.2812 |
| 39/64 | .609375 | 15.4781 | 40.8781 | 66.2781 | 91.6781 | 117.0781 | 142.4781 | 167.8781 | 193.2781 | 218.6781 |
| 5/ 8 | .625000 | 15.8750 | 41.2750 | 66.6750 | 92.0750 | 117.4750 | 142.8750 | 168.2750 | 193.6750 | 219.0750 |
| 41/64 | .640625 | 16.2719 | 41.6719 | 67.0719 | 92.4719 | 117.8719 | 143.2719 | 168.6719 | 194.0719 | 219.4719 |
| 21/32 | .656250 | 16.6688 | 42.0688 | 67.4688 | 92.8688 | 118.2688 | 143.6688 | 169.0688 | 194.4688 | 219.8688 |
| 43/64 | .671875 | 17.0656 | 42.4656 | 67.8656 | 93.2656 | 118.6656 | 144.0656 | 169.4656 | 194.8656 | 220.2656 |
| 11/16 | .687500 | 17.4625 | 42.8625 | 68.2625 | 93.6625 | 119.0625 | 144.4625 | 169.8625 | 195.2625 | 220.6625 |
| 45/64 | .703125 | 17.8594 | 43.2594 | 68.6594 | 94.0594 | 119.4594 | 144.8594 | 170.2594 | 195.6594 | 221.0594 |
| 23/32 | .718750 | 18.2562 | 43.6562 | 69.0562 | 94.4652 | 119.8562 | 145.2562 | 170.6562 | 196.0562 | 221.4562 |
| 47/64 | .734375 | 18.6531 | 44.0531 | 69.4531 | 94.8531 | 120.2531 | 145.6531 | 171.0531 | 196.4531 | 221.8531 |
| 3/ 4 | .750000 | 19.0500 | 44.4500 | 69.8500 | 95.2500 | 120.6500 | 146.0500 | 171.4500 | 196.8500 | 222.2500 |
| 49/64 | .765625 | 19.4469 | 44.8469 | 70.2469 | 95.6469 | 121.0469 | 146.4469 | 171.8469 | 197.2469 | 222.6469 |
| 25/32 | .781250 | 19.8438 | 45.2438 | 70.6438 | 96.0438 | 121.4438 | 146.8438 | 172.2438 | 197.6438 | 223.0438 |
| 51/64 | .796875 | 20.2406 | 45.6406 | 71.0406 | 96.4406 | 121.8406 | 147.2406 | 127.6406 | 198.0406 | 223.4406 |
| 13/16 | .812500 | 20.6375 | 46.0375 | 71.4375 | 96.8375 | 122.2375 | 147.6375 | 173.0375 | 198.4375 | 223.8375 |
| 53/64 | .828125 | 21.0344 | 46.4344 | 71.8344 | 97.2344 | 122.6344 | 148.0344 | 173.4344 | 198.8344 | 224.2344 |
| 27/32 | .843750 | 21.4312 | 46.8312 | 72.2312 | 97.6312 | 123.0312 | 148.4312 | 173.8312 | 199.2312 | 224.6312 |
| 55/64 | .859375 | 21.8281 | 47.2281 | 72.6281 | 98.0281 | 123.4281 | 148.8281 | 174.2281 | 199.6281 | 225.0281 |
| 7/ 8 | .875000 | 22.2250 | 47.6250 | 73.0250 | 98.4250 | 123.8250 | 149.2250 | 174.6250 | 200.0250 | 225.4250 |
| 57/64 | .890625 | 22.6219 | 48.0219 | 73.4219 | 98.8219 | 124.2219 | 149.6219 | 175.0219 | 200.4219 | 225.8219 |
| 29/32 | .906250 | 23.0188 | 48.4188 | 73.8188 | 99.2188 | 124.6188 | 150.0188 | 175.4188 | 200.8188 | 226.2188 |
| 59/64 | .921875 | 23.4156 | 48.8156 | 74.2156 | 99.6156 | 125.0156 | 150.4156 | 175.8156 | 201.2156 | 226.6156 |
| 15/16 | .937500 | 23.8125 | 49.2125 | 74.6125 | 100.0125 | 125.4125 | 150.8125 | 176.2125 | 201.6125 | 227.0125 |
| 61/64 | .953125 | 24.2094 | 49.6094 | 75.0094 | 100.4094 | 125.8094 | 151.2094 | 176.6094 | 202.0094 | 227.4094 |
| 31/32 | .968750 | 24.6062 | 50.0062 | 75.4062 | 100.8062 | 126.2062 | 151.6062 | 177.0062 | 202.4062 | 227.8062 |
| 63/64 | .984375 | 25.0031 | 50.4031 | 75.8031 | 101.2031 | 126.6031 | 152.0031 | 177.4031 | 202.8031 | 228.2031 |

## Table 2. kgf—N Conversion Table

1 kgf = 9.80665 N
1 N = 0.101972 kgf

| kgf | | N | kgf | | N | kgf | | N |
|---|---|---|---|---|---|---|---|---|
| 0.1020 | **1** | 9.8066 | 3.4670 | **34** | 333.43 | 6.8321 | **67** | 657.05 |
| 0.2039 | **2** | 19.613 | 3.5690 | **35** | 343.23 | 6.9341 | **68** | 666.85 |
| 0.3059 | **3** | 29.420 | 3.6710 | **36** | 353.04 | 7.0360 | **69** | 676.66 |
| 0.4079 | **4** | 39.227 | 3.7730 | **37** | 362.85 | 7.1380 | **70** | 686.47 |
| 0.5099 | **5** | 49.033 | 3.8749 | **38** | 372.65 | 7.2400 | **71** | 696.27 |
| 0.6118 | **6** | 58.840 | 3.9769 | **39** | 382.46 | 7.3420 | **72** | 706.08 |
| 0.7138 | **7** | 68.647 | 4.0789 | **40** | 392.27 | 7.4439 | **73** | 715.89 |
| 0.8158 | **8** | 78.453 | 4.1808 | **41** | 402.07 | 7.5459 | **74** | 725.69 |
| 0.9177 | **9** | 88.260 | 4.2828 | **42** | 411.88 | 7.6479 | **75** | 735.50 |
| 1.0197 | **10** | 98.066 | 4.3848 | **43** | 421.69 | 7.7498 | **76** | 745.31 |
| 1.1217 | **11** | 107.87 | 4.4868 | **44** | 431.49 | 7.8518 | **77** | 755.11 |
| 1.2237 | **12** | 117.68 | 4.5887 | **45** | 441.30 | 7.9538 | **78** | 764.92 |
| 1.3256 | **13** | 127.49 | 4.6907 | **46** | 451.11 | 8.0558 | **79** | 774.73 |
| 1.4276 | **14** | 137.29 | 4.7927 | **47** | 460.91 | 8.1577 | **80** | 784.53 |
| 1.5296 | **15** | 147.10 | 4.8946 | **48** | 470.72 | 8.2597 | **81** | 794.34 |
| 1.6315 | **16** | 156.91 | 4.9966 | **49** | 480.53 | 8.3617 | **82** | 804.15 |
| 1.7335 | **17** | 166.71 | 5.0986 | **50** | 490.33 | 8.4636 | **83** | 813.95 |
| 1.8355 | **18** | 176.52 | 5.2006 | **51** | 500.14 | 8.5656 | **84** | 823.76 |
| 1.9375 | **19** | 186.33 | 5.3025 | **52** | 509.95 | 8.6676 | **85** | 833.57 |
| 2.0394 | **20** | 196.13 | 5.4045 | **53** | 519.75 | 8.7696 | **86** | 843.37 |
| 2.1414 | **21** | 205.94 | 5.5065 | **54** | 529.56 | 8.8716 | **87** | 853.18 |
| 2.2434 | **22** | 215.75 | 5.6084 | **55** | 539.37 | 8.9735 | **88** | 862.99 |
| 2.3453 | **23** | 225.55 | 5.7104 | **56** | 549.17 | 9.0755 | **89** | 872.79 |
| 2.4473 | **24** | 235.36 | 5.8124 | **57** | 558.98 | 9.1774 | **90** | 882.60 |
| 2.5493 | **25** | 245.17 | 5.9144 | **58** | 568.79 | 9.2794 | **91** | 892.41 |
| 2.6513 | **26** | 254.97 | 6.0163 | **59** | 578.59 | 9.3814 | **92** | 902.21 |
| 2.7532 | **27** | 264.78 | 6.1183 | **60** | 588.40 | 9.4834 | **93** | 912.02 |
| 2.8552 | **28** | 274.59 | 6.2203 | **61** | 598.21 | 9.5853 | **94** | 921.83 |
| 2.9572 | **29** | 284.39 | 6.3222 | **62** | 608.01 | 9.6873 | **95** | 931.63 |
| 3.0591 | **30** | 294.20 | 6.4242 | **63** | 617.82 | 9.7893 | **96** | 941.44 |
| 3.1611 | **31** | 304.01 | 6.5262 | **64** | 627.63 | 9.8912 | **97** | 951.25 |
| 3.2631 | **32** | 313.81 | 6.6282 | **65** | 637.43 | 9.9932 | **98** | 961.05 |
| 3.3651 | **33** | 323.62 | 6.7301 | **66** | 647.24 | 10.0952 | **99** | 970.86 |

How to convert: (1) When 10kgf should be converted into N, look for the number 10 on the central column in the first file.
The number at its right hand side shows 98.066N
(2) To the contrary, 10N can be converted into 1.0197kgf.





## Table 3. kg—lb Conversion Table

1 kg = 2.204622 lb
1 lb = 0.45359 kg

| kg | | lb | kg | | lb | kg | | lb |
|---|---|---|---|---|---|---|---|---|
| 0.454 | **1** | 2.205 | 15.422 | **34** | 74.957 | 30.391 | **67** | 147.71 |
| 0.907 | **2** | 4.409 | 15.876 | **35** | 77.162 | 30.844 | **68** | 149.91 |
| 1.361 | **3** | 6.614 | 16.329 | **36** | 79.366 | 31.298 | **69** | 152.12 |
| 1.814 | **4** | 8.818 | 16.783 | **37** | 81.571 | 31.751 | **70** | 154.32 |
| 2.268 | **5** | 11.023 | 17.236 | **38** | 83.776 | 32.205 | **71** | 156.53 |
| 2.722 | **6** | 13.228 | 17.690 | **39** | 85.980 | 32.659 | **72** | 158.73 |
| 3.175 | **7** | 15.432 | 18.144 | **40** | 88.185 | 33.112 | **73** | 160.94 |
| 3.629 | **8** | 17.637 | 18.597 | **41** | 90.390 | 33.566 | **74** | 163.14 |
| 4.082 | **9** | 19.842 | 19.051 | **42** | 92.594 | 34.019 | **75** | 165.35 |
| 4.536 | **10** | 22.046 | 19.504 | **43** | 94.799 | 34.473 | **76** | 167.55 |
| 4.990 | **11** | 24.251 | 19.958 | **44** | 97.003 | 34.927 | **77** | 169.76 |
| 5.443 | **12** | 26.455 | 20.412 | **45** | 99.208 | 35.380 | **78** | 171.96 |
| 5.897 | **13** | 28.660 | 20.865 | **46** | 101.41 | 35.834 | **79** | 174.17 |
| 6.350 | **14** | 30.865 | 21.319 | **47** | 103.62 | 36.287 | **80** | 176.37 |
| 6.804 | **15** | 33.069 | 21.772 | **48** | 105.82 | 36.741 | **81** | 178.57 |
| 7.257 | **16** | 35.274 | 22.226 | **49** | 108.03 | 37.194 | **82** | 180.78 |
| 7.711 | **17** | 37.479 | 22.680 | **50** | 110.23 | 37.648 | **83** | 182.98 |
| 8.165 | **18** | 39.683 | 23.133 | **51** | 112.44 | 38.102 | **84** | 185.19 |
| 8.618 | **19** | 41.888 | 23.587 | **52** | 114.64 | 38.555 | **85** | 187.39 |
| 9.072 | **20** | 44.092 | 24.040 | **53** | 116.84 | 39.009 | **86** | 189.60 |
| 9.525 | **21** | 46.297 | 24.494 | **54** | 119.05 | 39.462 | **87** | 191.80 |
| 9.979 | **22** | 48.502 | 24.948 | **55** | 121.25 | 39.916 | **88** | 194.01 |
| 10.433 | **23** | 50.706 | 25.401 | **56** | 123.46 | 40.370 | **89** | 196.21 |
| 10.886 | **24** | 52.911 | 25.855 | **57** | 125.66 | 40.823 | **90** | 198.42 |
| 11.340 | **25** | 55.116 | 26.308 | **58** | 127.87 | 41.277 | **91** | 200.62 |
| 11.793 | **26** | 57.320 | 26.762 | **59** | 130.07 | 41.730 | **92** | 202.83 |
| 12.247 | **27** | 59.525 | 27.216 | **60** | 132.28 | 42.184 | **93** | 205.03 |
| 12.701 | **28** | 61.729 | 27.669 | **61** | 134.48 | 42.638 | **94** | 207.23 |
| 13.154 | **29** | 63.934 | 28.123 | **62** | 136.69 | 43.091 | **95** | 209.44 |
| 13.608 | **30** | 66.139 | 28.576 | **63** | 138.89 | 43.545 | **96** | 211.64 |
| 14.061 | **31** | 68.343 | 29.030 | **64** | 141.10 | 43.998 | **97** | 213.85 |
| 14.515 | **32** | 70.548 | 29.483 | **65** | 143.30 | 44.452 | **98** | 216.05 |
| 14.968 | **33** | 72.753 | 29.937 | **66** | 145.51 | 44.906 | **99** | 218.26 |

How to convert: (1) When 43kg should be converted into lb, look for the number 43 on the central column in the second file.
The number at its right hand side shows 94.799lb.
(2) To the contrary, 43lb can be converted into 19.504kg.

## Table 4. °C—°F Conversion Table

$$C = \frac{5}{9}(F-32)$$

$$F = \frac{9}{5}C+32$$

| °C | | °F | °C | | °F | °C | | °F | °C | | °F |
|---|---|---|---|---|---|---|---|---|---|---|---|
| –73 | **–100** | –148 | –1.7 | **29** | 84.2 | 17.8 | **64** | 147.2 | 37.2 | **99** | 210.2 |
| –62 | **– 80** | –112 | –1.1 | **30** | 86.0 | 18.3 | **65** | 149.0 | 37.8 | **100** | 212.0 |
| –51 | **– 60** | – 76 | –0.6 | **31** | 87.8 | 18.9 | **66** | 150.8 | 40.6 | **105** | 221 |
| –40 | **– 40** | – 40 | 0 | **32** | 89.6 | 19.4 | **67** | 152.6 | 43 | **110** | 230 |
| –29 | **– 20** | – 4 | 0.6 | **33** | 91.4 | 20.0 | **68** | 154.4 | 49 | **120** | 248 |
| –23.3 | **– 10** | 14 | 1.1 | **34** | 93.2 | 20.6 | **69** | 156.2 | 54 | **130** | 266 |
| –17.8 | **0** | 32 | 1.7 | **35** | 95.0 | 21.1 | **70** | 158.0 | 60 | **140** | 284 |
| –17.2 | **1** | 33.8 | 2.2 | **36** | 96.8 | 21.7 | **71** | 159.8 | 66 | **150** | 302 |
| –16.7 | **2** | 35.6 | 2.8 | **37** | 98.6 | 22.2 | **72** | 161.6 | 71 | **160** | 320 |
| –16.1 | **3** | 37.4 | 3.3 | **38** | 100.4 | 22.8 | **73** | 163.4 | 77 | **170** | 338 |
| –15.6 | **4** | 39.2 | 3.9 | **39** | 102.2 | 23.3 | **74** | 165.2 | 82 | **180** | 356 |
| –15.0 | **5** | 41.0 | 4.4 | **40** | 104.0 | 23.9 | **75** | 167.0 | 88 | **190** | 374 |
| –14.4 | **6** | 42.8 | 5.0 | **41** | 105.8 | 24.4 | **76** | 168.8 | 93 | **200** | 392 |
| –13.9 | **7** | 44.6 | 5.6 | **42** | 107.6 | 25.0 | **77** | 170.6 | 121 | **250** | 482 |
| –13.3 | **8** | 46.4 | 6.1 | **43** | 109.4 | 25.6 | **78** | 172.4 | 149 | **300** | 572 |
| –12.8 | **9** | 48.2 | 6.7 | **44** | 111.2 | 26.1 | **79** | 174.2 | 177 | **350** | 662 |
| –12.2 | **10** | 50.0 | 7.2 | **45** | 113.0 | 26.7 | **80** | 176.0 | 204 | **400** | 752 |
| –11.7 | **11** | 51.8 | 7.8 | **46** | 114.8 | 27.2 | **81** | 177.8 | 232 | **450** | 842 |
| –11.1 | **12** | 53.6 | 8.3 | **47** | 116.6 | 27.8 | **82** | 179.6 | 260 | **500** | 932 |
| –10.6 | **13** | 55.4 | 8.9 | **48** | 118.4 | 28.3 | **83** | 181.4 | 288 | **550** | 1022 |
| –10.0 | **14** | 57.2 | 9.4 | **49** | 120.2 | 28.9 | **84** | 183.2 | 316 | **600** | 1112 |
| – 9.4 | **15** | 59.0 | 10.0 | **50** | 122.0 | 29.4 | **85** | 185.0 | 343 | **650** | 1202 |
| – 8.9 | **16** | 60.8 | 10.6 | **51** | 123.8 | 30.0 | **86** | 186.8 | 371 | **700** | 1292 |
| – 8.3 | **17** | 62.6 | 11.1 | **52** | 125.6 | 30.6 | **87** | 188.6 | 399 | **750** | 1382 |
| – 7.8 | **18** | 64.4 | 11.7 | **53** | 127.4 | 31.1 | **88** | 190.4 | 427 | **800** | 1472 |
| – 7.2 | **19** | 66.2 | 12.2 | **54** | 129.2 | 31.7 | **89** | 192.2 | 454 | **850** | 1562 |
| – 6.7 | **20** | 68.0 | 12.8 | **55** | 131.0 | 32.2 | **90** | 194.0 | 482 | **900** | 1652 |
| – 6.1 | **21** | 69.8 | 13.3 | **56** | 132.8 | 32.8 | **91** | 195.8 | 510 | **950** | 1742 |
| – 5.6 | **22** | 71.6 | 13.9 | **57** | 134.6 | 33.3 | **92** | 197.6 | 538 | **1000** | 1832 |
| – 5.0 | **23** | 73.4 | 14.4 | **58** | 136.4 | 33.9 | **93** | 199.4 | 593 | **1100** | 2012 |
| – 4.4 | **24** | 75.2 | 15.0 | **59** | 138.2 | 34.4 | **94** | 201.2 | 649 | **1200** | 2192 |
| – 3.9 | **25** | 77.0 | 15.6 | **60** | 140.0 | 35.0 | **95** | 203.0 | 704 | **1300** | 2372 |
| – 3.3 | **26** | 78.8 | 16.1 | **61** | 141.8 | 35.6 | **96** | 204.8 | 760 | **1400** | 2552 |
| – 2.8 | **27** | 80.6 | 16.7 | **62** | 143.6 | 36.1 | **97** | 206.6 | 816 | **1500** | 2732 |
| – 2.2 | **28** | 82.4 | 17.2 | **63** | 145.4 | 36.7 | **98** | 208.4 | 871 | **1600** | 2912 |

How to convert: (1) When 43°C should be converted into °F, look for the number 43 on the central column in the second file.
The number at its right hand side shows 109.4°F.
(2) To the contrary, 43°F can be converted into 6.1°C.





## Table 5. Hardness Conversion Table

**Nearly conversion for Rockwell C scale of Steel**

| Rockwell C scale (1471N) | Vickers | Brinell | | Rockwell | | Shore |
|---|---|---|---|---|---|---|
| | | Standard ball | Tungsten carbide ball | A scale (588.4N) | B scale (980.7N) | |
| 68 | 940 | — | — | 85.6 | — | 97 |
| 67 | 900 | — | — | 85.0 | — | 95 |
| 66 | 865 | — | — | 84.5 | — | 92 |
| 65 | 832 | — | (739) | 83.9 | — | 91 |
| 64 | 800 | — | (722) | 83.4 | — | 88 |
| 63 | 772 | — | (705) | 82.8 | — | 87 |
| 62 | 746 | — | (688) | 82.3 | — | 85 |
| 61 | 720 | — | (670) | 81.8 | — | 83 |
| 60 | 697 | — | (654) | 81.2 | — | 81 |
| 59 | 674 | — | (634) | 80.7 | — | 80 |
| 58 | 653 | — | 615 | 80.1 | — | 78 |
| 57 | 633 | — | 595 | 79.6 | — | 76 |
| 56 | 613 | — | 577 | 79.0 | — | 75 |
| 55 | 595 | — | 560 | 78.5 | — | 74 |
| 54 | 577 | — | 543 | 78.0 | — | 72 |
| 53 | 560 | — | 525 | 77.4 | — | 71 |
| 52 | 544 | (500) | 512 | 76.8 | — | 69 |
| 51 | 528 | (487) | 496 | 76.3 | — | 68 |
| 50 | 513 | (475) | 481 | 75.9 | — | 67 |
| 49 | 498 | (464) | 469 | 75.2 | — | 66 |
| 48 | 484 | 451 | 455 | 74.7 | — | 64 |
| 47 | 471 | 442 | 443 | 74.1 | — | 63 |
| 46 | 458 | 432 | 432 | 73.6 | — | 62 |
| 45 | 446 | 421 | 421 | 73.1 | — | 60 |
| 44 | 434 | 409 | 409 | 72.5 | — | 58 |
| 43 | 423 | 400 | 400 | 72.0 | — | 57 |
| 42 | 412 | 390 | 390 | 71.5 | — | 56 |
| 41 | 402 | 381 | 381 | 70.9 | — | 55 |
| 40 | 392 | 371 | 371 | 70.4 | — | 54 |
| 39 | 382 | 362 | 362 | 69.9 | — | 52 |
| 38 | 372 | 353 | 353 | 69.4 | — | 51 |
| 37 | 363 | 344 | 344 | 68.9 | — | 50 |
| 36 | 354 | 336 | 336 | 68.4 | (109.0) | 49 |
| 35 | 345 | 327 | 327 | 67.9 | (108.5) | 48 |
| 34 | 336 | 319 | 319 | 67.4 | (108.0) | 47 |
| 33 | 327 | 311 | 311 | 66.8 | (107.5) | 46 |
| 32 | 318 | 301 | 301 | 66.3 | (107.0) | 44 |
| 31 | 310 | 294 | 294 | 65.8 | (106.0) | 43 |
| 30 | 302 | 286 | 286 | 65.3 | (105.5) | 42 |
| 29 | 294 | 279 | 279 | 64.7 | (104.5) | 41 |
| 28 | 286 | 271 | 271 | 64.3 | (104.0) | 41 |
| 27 | 279 | 264 | 264 | 63.8 | (103.0) | 40 |
| 26 | 272 | 258 | 258 | 63.3 | (102.5) | 38 |
| 25 | 266 | 253 | 253 | 62.8 | (101.5) | 38 |
| 24 | 260 | 247 | 247 | 62.4 | (101.0) | 37 |
| 23 | 254 | 243 | 243 | 62.0 | 100.0 | 36 |
| 22 | 248 | 237 | 237 | 61.5 | 99.0 | 35 |
| 21 | 243 | 231 | 231 | 61.0 | 98.5 | 35 |
| 20 | 238 | 226 | 226 | 60.5 | 97.8 | 34 |
| (18) | 230 | 219 | 219 | — | 96.7 | 33 |
| (16) | 222 | 212 | 212 | — | 95.5 | 32 |
| (14) | 213 | 203 | 203 | — | 93.9 | 31 |
| (12) | 204 | 194 | 194 | — | 92.3 | 29 |
| (10) | 196 | 187 | 187 | — | 90.7 | 28 |
| ( 8) | 188 | 179 | 179 | — | 89.5 | 27 |
| ( 6) | 180 | 171 | 171 | — | 87.1 | 26 |
| ( 4) | 173 | 165 | 165 | — | 85.5 | 25 |
| ( 2) | 166 | 158 | 158 | — | 83.5 | 24 |
| ( 0) | 160 | 152 | 152 | — | 81.7 | 24 |

Numbers with ( ) are for reference.

# Table 6. Tolerance of Shaft

Unit: μm

| Dimension (mm) | | a13 | | c12 | | d6 | | e6 | | e13 | | f5 | | f6 | | g5 | | g6 | |
|---|---|---|---|---|---|---|---|---|---|---|---|---|---|---|---|---|---|---|---|
| Over | Incl. | High | Low | High | Low | High | Low | High | Low | High | Low | High | Low | High | Low | High | Low | High | Low |
| 3 | 6 | −270 | −450 | −70 | −190 | −30 | −38 | −20 | −28 | −20 | −200 | −10 | −15 | −10 | −18 | −4 | −9 | −4 | −12 |
| 6 | 10 | −280 | −500 | −80 | −230 | −40 | −49 | −25 | −34 | −25 | −245 | −13 | −19 | −13 | −22 | −5 | −11 | −5 | −14 |
| 10 | 18 | −290 | −560 | −95 | −275 | −50 | −61 | −32 | −43 | −32 | −302 | −16 | −24 | −16 | −27 | −6 | −14 | −6 | −17 |
| 18 | 30 | −300 | −630 | −110 | −320 | −65 | −78 | −40 | −53 | −40 | −370 | −20 | −29 | −20 | −33 | −7 | −16 | −7 | −20 |
| 30 | 40 | −310 | −700 | −120 | −370 | −80 | −96 | −50 | −66 | −50 | −440 | −25 | −36 | −25 | −41 | −9 | −20 | −9 | −25 |
| 40 | 50 | −320 | −710 | −130 | −380 | | | | | | | | | | | | | | |
| 50 | 65 | −340 | −800 | −140 | −440 | −100 | −119 | −60 | −79 | −60 | −520 | −30 | −43 | −30 | −49 | −10 | −23 | −10 | −29 |
| 65 | 80 | −360 | −820 | −150 | −450 | | | | | | | | | | | | | | |
| 80 | 100 | −380 | −920 | −170 | −520 | −120 | −142 | −72 | −94 | −72 | −612 | −36 | −51 | −36 | −58 | −12 | −27 | −12 | −34 |
| 100 | 120 | −410 | −950 | −180 | −530 | | | | | | | | | | | | | | |
| 120 | 140 | −460 | −1090 | −200 | −600 | −145 | −170 | −85 | −110 | −85 | −715 | −43 | −61 | −43 | −68 | −14 | −32 | −14 | −39 |
| 140 | 160 | −520 | −1150 | −210 | −610 | | | | | | | | | | | | | | |
| 160 | 180 | −580 | −1210 | −230 | −630 | | | | | | | | | | | | | | |
| 180 | 200 | −660 | −1380 | −240 | −700 | −170 | −199 | −100 | −129 | −100 | −820 | −50 | −70 | −50 | −79 | −15 | −35 | −15 | −44 |
| 200 | 225 | −740 | −1460 | −260 | −720 | | | | | | | | | | | | | | |
| 225 | 250 | −820 | −1540 | −280 | −740 | | | | | | | | | | | | | | |
| 250 | 280 | −920 | −1730 | −300 | −820 | −190 | −222 | −110 | −142 | −110 | −920 | −56 | −79 | −56 | −88 | −17 | −40 | −17 | −49 |
| 280 | 315 | −1050 | −1860 | −330 | −850 | | | | | | | | | | | | | | |
| 315 | 355 | −1200 | −2090 | −360 | −930 | −210 | −246 | −125 | −161 | −125 | −1015 | −62 | −87 | −62 | −98 | −18 | −43 | −18 | −54 |
| 355 | 400 | −1350 | −2240 | −400 | −970 | | | | | | | | | | | | | | |
| 400 | 450 | −1550 | −2470 | −440 | −1070 | −230 | −270 | −135 | −175 | −135 | −1105 | −68 | −95 | −68 | −108 | −20 | −47 | −20 | −60 |
| 450 | 500 | −1650 | −2620 | −480 | −1110 | | | | | | | | | | | | | | |
| 500 | 560 | — | | — | — | −260 | −304 | −145 | −189 | — | — | — | — | −76 | −120 | — | — | −22 | −66 |
| 560 | 630 | | | | | | | | | | | | | | | | | | |
| 630 | 710 | — | | — | — | −290 | −340 | −160 | −210 | — | — | — | — | −80 | −130 | — | — | −24 | −74 |
| 710 | 800 | | | | | | | | | | | | | | | | | | |
| 800 | 900 | — | | — | — | −320 | −376 | −170 | −226 | — | — | — | — | −86 | −142 | — | — | −26 | −82 |
| 900 | 1000 | | | | | | | | | | | | | | | | | | |
| 1000 | 1120 | — | | — | — | −350 | −416 | −195 | −261 | — | — | — | — | −98 | −164 | — | — | −28 | −94 |
| 1120 | 1250 | | | | | | | | | | | | | | | | | | |
| 1250 | 1400 | — | | — | — | −390 | −468 | −220 | −298 | — | — | — | — | −110 | −188 | — | — | −30 | −108 |
| 1400 | 1600 | | | | | | | | | | | | | | | | | | |

| Dimension (mm) | | h4 | | h5 | | h6 | | h7 | | h8 | | h9 | | h10 | | h11 | | h13 | | js4 | | Dimension (mm) | |
|---|---|---|---|---|---|---|---|---|---|---|---|---|---|---|---|---|---|---|---|---|---|---|---|
| Over | Incl. | High | Low | High | Low | High | Low | High | Low | High | Low | High | Low | High | Low | High | Low | High | Low | High | Low | Over | Incl. |
| 3 | 6 | 0 | −4 | 0 | −5 | 0 | −8 | 0 | −12 | 0 | −18 | 0 | −30 | 0 | −48 | 0 | −75 | 0 | −180 | +2 | −2 | 3 | 6 |
| 6 | 10 | 0 | −4 | 0 | −6 | 0 | −9 | 0 | −15 | 0 | −22 | 0 | −36 | 0 | −58 | 0 | −90 | 0 | −220 | +2 | −2 | 6 | 10 |
| 10 | 18 | 0 | −5 | 0 | −8 | 0 | −11 | 0 | −18 | 0 | −27 | 0 | −43 | 0 | −70 | 0 | −110 | 0 | −270 | +2.5 | −2.5 | 10 | 18 |
| 18 | 30 | 0 | −6 | 0 | −9 | 0 | −13 | 0 | −21 | 0 | −33 | 0 | −52 | 0 | −84 | 0 | −130 | 0 | −330 | +3 | −3 | 18 | 30 |
| 30 | 40 | 0 | −7 | 0 | −11 | 0 | −16 | 0 | −25 | 0 | −39 | 0 | −62 | 0 | −100 | 0 | −160 | 0 | −390 | +3.5 | −3.5 | 30 | 40 |
| 40 | 50 | | | | | | | | | | | | | | | | | | | | | 40 | 50 |
| 50 | 65 | 0 | −8 | 0 | −13 | 0 | −19 | 0 | −30 | 0 | −46 | 0 | −74 | 0 | −120 | 0 | −190 | 0 | −460 | +4 | −4 | 50 | 65 |
| 65 | 80 | | | | | | | | | | | | | | | | | | | | | 65 | 80 |
| 80 | 100 | 0 | −10 | 0 | −15 | 0 | −22 | 0 | −35 | 0 | −54 | 0 | −87 | 0 | −140 | 0 | −220 | 0 | −540 | +5 | −5 | 80 | 100 |
| 100 | 120 | | | | | | | | | | | | | | | | | | | | | 100 | 120 |
| 120 | 140 | 0 | −12 | 0 | −18 | 0 | −25 | 0 | −40 | 0 | −63 | 0 | −100 | 0 | −160 | 0 | −250 | 0 | −630 | +6 | −6 | 120 | 140 |
| 140 | 160 | | | | | | | | | | | | | | | | | | | | | 140 | 160 |
| 160 | 180 | | | | | | | | | | | | | | | | | | | | | 160 | 180 |
| 180 | 200 | 0 | −14 | 0 | −20 | 0 | −29 | 0 | −46 | 0 | −72 | 0 | −115 | 0 | −185 | 0 | −290 | 0 | −720 | +7 | −7 | 180 | 200 |
| 200 | 225 | | | | | | | | | | | | | | | | | | | | | 200 | 225 |
| 225 | 250 | | | | | | | | | | | | | | | | | | | | | 225 | 250 |
| 250 | 280 | 0 | −16 | 0 | −23 | 0 | −32 | 0 | −52 | 0 | −81 | 0 | −130 | 0 | −210 | 0 | −320 | 0 | −810 | +8 | −8 | 250 | 280 |
| 280 | 315 | | | | | | | | | | | | | | | | | | | | | 280 | 315 |
| 315 | 355 | 0 | −18 | 0 | −25 | 0 | −36 | 0 | −57 | 0 | −89 | 0 | −140 | 0 | −230 | 0 | −360 | 0 | −890 | +9 | −9 | 315 | 355 |
| 355 | 400 | | | | | | | | | | | | | | | | | | | | | 355 | 400 |
| 400 | 450 | 0 | −20 | 0 | −27 | 0 | −40 | 0 | −63 | 0 | −97 | 0 | −155 | 0 | −250 | 0 | −400 | 0 | −970 | +10 | −10 | 400 | 450 |
| 450 | 500 | | | | | | | | | | | | | | | | | | | | | 450 | 500 |
| 500 | 560 | — | — | — | — | 0 | −44 | 0 | −70 | 0 | −110 | 0 | −175 | 0 | −280 | 0 | −440 | — | — | — | — | 500 | 560 |
| 560 | 630 | | | | | | | | | | | | | | | | | | | | | 560 | 630 |
| 630 | 710 | — | — | — | — | 0 | −50 | 0 | −80 | 0 | −125 | 0 | −200 | 0 | −320 | 0 | −500 | — | — | — | — | 630 | 710 |
| 710 | 800 | | | | | | | | | | | | | | | | | | | | | 710 | 800 |
| 800 | 900 | — | — | — | — | 0 | −56 | 0 | −90 | 0 | −140 | 0 | −230 | 0 | −360 | 0 | −560 | — | — | — | — | 800 | 900 |
| 900 | 1000 | | | | | | | | | | | | | | | | | | | | | 900 | 1000 |
| 1000 | 1120 | — | — | — | — | 0 | −66 | 0 | −105 | 0 | −165 | 0 | −260 | 0 | −420 | 0 | −660 | — | — | — | — | 1000 | 1120 |
| 1120 | 1250 | | | | | | | | | | | | | | | | | | | | | 1120 | 1250 |
| 1250 | 1400 | — | — | — | — | 0 | −78 | 0 | −125 | 0 | −195 | 0 | −310 | 0 | −500 | 0 | −780 | — | — | — | — | 1250 | 1400 |
| 1400 | 1600 | | | | | | | | | | | | | | | | | | | | | 1400 | 1600 |

Unit: μm

| Dimension (mm) | | j5 | | js5 | | j6 | | js6 | | j7 | | k4 | | k5 | | k6 | | m5 | |
|---|---|---|---|---|---|---|---|---|---|---|---|---|---|---|---|---|---|---|---|
| Over | Incl. | High | Low | High | Low | High | Low | High | Low | High | Low | High | Low | High | Low | High | Low | High | Low |
| 3 | 6 | +3 | −2 | +2.5 | −2.5 | +6 | −2 | +4 | −4 | +8 | −4 | +5 | +1 | +6 | +1 | +9 | +1 | +9 | +4 |
| 6 | 10 | +4 | −2 | +3 | −3 | +7 | −2 | +4.5 | −4.5 | +10 | −5 | +5 | +1 | +7 | +1 | +10 | +1 | +12 | +6 |
| 10 | 18 | +5 | −3 | +4 | −4 | +8 | −3 | +5.5 | −5.5 | +12 | −6 | +6 | +1 | +9 | +1 | +12 | +1 | +15 | +7 |
| 18 | 30 | +5 | −4 | +4.5 | −4.5 | +9 | −4 | +6.8 | −6.8 | +13 | −8 | +8 | +2 | +11 | +2 | +15 | +2 | +17 | +8 |
| 30 | 40 | +6 | −5 | +5.5 | −5.5 | +11 | −5 | +8 | −8 | +15 | −10 | +9 | +2 | +13 | +2 | +18 | +2 | +20 | +9 |
| 40 | 50 | | | | | | | | | | | | | | | | | | |
| 50 | 65 | +6 | −7 | +6.5 | −6.5 | +12 | −7 | +9.5 | −9.5 | +18 | −12 | +10 | +2 | +15 | +2 | +21 | +2 | +24 | +11 |
| 65 | 80 | | | | | | | | | | | | | | | | | | |
| 80 | 100 | +6 | −9 | +7.5 | −7.5 | +13 | −9 | +11 | −11 | +20 | −15 | +13 | +3 | +18 | +3 | +25 | +3 | +28 | +13 |
| 100 | 120 | | | | | | | | | | | | | | | | | | |
| 120 | 140 | +7 | −11 | +9 | −9 | +14 | −11 | +12.5 | −12.5 | +22 | −18 | +15 | +3 | +21 | +3 | +28 | +3 | +33 | +15 |
| 140 | 160 | | | | | | | | | | | | | | | | | | |
| 160 | 180 | | | | | | | | | | | | | | | | | | |
| 180 | 200 | +7 | −13 | +10 | −10 | +16 | −13 | +14.5 | −14.5 | +25 | −21 | +18 | +4 | +24 | +4 | +33 | +4 | +37 | +17 |
| 200 | 225 | | | | | | | | | | | | | | | | | | |
| 225 | 250 | | | | | | | | | | | | | | | | | | |
| 250 | 280 | +7 | −16 | +11.5 | −11.5 | +16 | −16 | +16 | −16 | +26 | −26 | +20 | +4 | +27 | +4 | +36 | +4 | +43 | +20 |
| 280 | 315 | | | | | | | | | | | | | | | | | | |
| 315 | 355 | +7 | −18 | +12.5 | −12.5 | +18 | −18 | +18 | −18 | +29 | −28 | +22 | +4 | +29 | +4 | +40 | +4 | +46 | +21 |
| 355 | 400 | | | | | | | | | | | | | | | | | | |
| 400 | 450 | +7 | −20 | +13.5 | −13.5 | +20 | −20 | +20 | −20 | +31 | −32 | +25 | +5 | +32 | +5 | +45 | +5 | +50 | +23 |
| 450 | 500 | | | | | | | | | | | | | | | | | | |
| 500 | 560 | — | — | — | — | — | — | +22 | −22 | — | — | — | — | — | — | +44 | 0 | — | — |
| 560 | 630 | | | | | | | | | | | | | | | | | | |
| 630 | 710 | — | — | — | — | — | — | +25 | −25 | — | — | — | — | — | — | +50 | 0 | — | — |
| 710 | 800 | | | | | | | | | | | | | | | | | | |
| 800 | 900 | — | — | — | — | — | — | +28 | −28 | — | — | — | — | — | — | +56 | 0 | — | — |
| 900 | 1000 | | | | | | | | | | | | | | | | | | |
| 1000 | 1120 | — | — | — | — | — | — | +33 | −33 | — | — | — | — | — | — | +66 | 0 | — | — |
| 1120 | 1250 | | | | | | | | | | | | | | | | | | |
| 1250 | 1400 | — | — | — | — | — | — | +39 | −39 | — | — | — | — | — | — | +78 | 0 | — | — |
| 1400 | 1600 | | | | | | | | | | | | | | | | | | |

| Dimension (mm) | | m6 | | n5 | | n6 | | p5 | | p6 | | r6 | | r7 | | Base Tolerance | | | | Dimension (mm) | |
|---|---|---|---|---|---|---|---|---|---|---|---|---|---|---|---|---|---|---|---|---|---|
| Over | Incl. | High | Low | High | Low | High | Low | High | Low | High | Low | High | Low | High | Low | IT2 | IT3 | IT5 | IT7 | Over | Incl. |
| 3 | 6 | +12 | +4 | +13 | +8 | +16 | +8 | +17 | +12 | +20 | +12 | +23 | +15 | +27 | +15 | 1.5 | 2.5 | 5 | 12 | 3 | 6 |
| 6 | 10 | +15 | +6 | +16 | +10 | +19 | +10 | +21 | +15 | +24 | +15 | +28 | +19 | +34 | +19 | 1.5 | 2.5 | 6 | 15 | 6 | 10 |
| 10 | 18 | +18 | +7 | +20 | +12 | +23 | +12 | +26 | +18 | +29 | +18 | +34 | +23 | +41 | +23 | 2 | 3 | 8 | 18 | 10 | 18 |
| 18 | 30 | +21 | +8 | +24 | +15 | +28 | +15 | +31 | +22 | +35 | +22 | +41 | +28 | +49 | +28 | 2.5 | 4 | 9 | 21 | 18 | 30 |
| 30 | 40 | +25 | +9 | +28 | +17 | +33 | +17 | +37 | +26 | +42 | +26 | +50 | +34 | +59 | +34 | 2.5 | 4 | 11 | 25 | 30 | 40 |
| 40 | 50 | | | | | | | | | | | | | | | | | | | 40 | 50 |
| 50 | 65 | +30 | +11 | +33 | +20 | +39 | +20 | +45 | +32 | +51 | +32 | +60 | +41 | +71 | +41 | 3 | 5 | 13 | 30 | 50 | 65 |
| 65 | 80 | | | | | | | | | | | +62 | +43 | +73 | +43 | | | | | 65 | 80 |
| 80 | 100 | +35 | +13 | +38 | +23 | +45 | +23 | +52 | +37 | +59 | +37 | +73 | +51 | +86 | +51 | 4 | 6 | 15 | 35 | 80 | 100 |
| 100 | 120 | | | | | | | | | | | +76 | +54 | +89 | +54 | | | | | 100 | 120 |
| 120 | 140 | +40 | +15 | +45 | +27 | +52 | +27 | +61 | +43 | +68 | +43 | +88 | +63 | +103 | +63 | 5 | 8 | 18 | 40 | 120 | 140 |
| 140 | 160 | | | | | | | | | | | +90 | +65 | +105 | +65 | | | | | 140 | 160 |
| 160 | 180 | | | | | | | | | | | +93 | +68 | +108 | +68 | | | | | 160 | 180 |
| 180 | 200 | +46 | +17 | +51 | +31 | +60 | +31 | +70 | +50 | +79 | +50 | +106 | +77 | +123 | +77 | 7 | 10 | 20 | 46 | 180 | 200 |
| 200 | 225 | | | | | | | | | | | +109 | +80 | +126 | +80 | | | | | 200 | 225 |
| 225 | 250 | | | | | | | | | | | +113 | +84 | +130 | +84 | | | | | 225 | 250 |
| 250 | 280 | +52 | +20 | +57 | +34 | +66 | +34 | +79 | +56 | +88 | +56 | +126 | +94 | +146 | +94 | 8 | 12 | 23 | 52 | 250 | 280 |
| 280 | 315 | | | | | | | | | | | +130 | +98 | +150 | +98 | | | | | 280 | 315 |
| 315 | 355 | +57 | +21 | +62 | +37 | +73 | +37 | +87 | +62 | +98 | +62 | +144 | +108 | +165 | +108 | 9 | 13 | 25 | 57 | 315 | 355 |
| 355 | 400 | | | | | | | | | | | +150 | +114 | +171 | +114 | | | | | 355 | 400 |
| 400 | 450 | +63 | +23 | +67 | +40 | +80 | +40 | +95 | +68 | +108 | +68 | +166 | +126 | +189 | +126 | 10 | 15 | 27 | 63 | 400 | 450 |
| 450 | 500 | | | | | | | | | | | +172 | +132 | +195 | +132 | | | | | 450 | 500 |
| 500 | 560 | +70 | +26 | — | — | +88 | +44 | — | — | +122 | +78 | +194 | +150 | +220 | +150 | — | — | — | 70 | 500 | 560 |
| 560 | 630 | | | | | | | | | | | +199 | +155 | +225 | +155 | | | | | 560 | 630 |
| 630 | 710 | +80 | +30 | — | — | +100 | +50 | — | — | +138 | +88 | +225 | +175 | +255 | +175 | — | — | — | 80 | 630 | 710 |
| 710 | 800 | | | | | | | | | | | +235 | +185 | +265 | +185 | | | | | 710 | 800 |
| 800 | 900 | +90 | +34 | — | — | +112 | +56 | — | — | +156 | +100 | +266 | +210 | +300 | +210 | — | — | — | 90 | 800 | 900 |
| 900 | 1000 | | | | | | | | | | | +276 | +220 | +310 | +220 | | | | | 900 | 1000 |
| 1000 | 1120 | +106 | +40 | — | — | +132 | +66 | — | — | +186 | +120 | +316 | +250 | +355 | +250 | — | — | — | 105 | 1000 | 1120 |
| 1120 | 1250 | | | | | | | | | | | +326 | +260 | +365 | +260 | | | | | 1120 | 1250 |
| 1250 | 1400 | +126 | +48 | — | — | +156 | +78 | — | — | +218 | +140 | +378 | +300 | +425 | +300 | — | — | — | 125 | 1250 | 1400 |
| 1400 | 1600 | | | | | | | | | | | +408 | +330 | +455 | +330 | | | | | 1400 | 1600 |

# Table 7. Tolerance of Housing Bore

Unit: μm

| Dimension (mm) | | E7 | | E10 | | E11 | | E12 | | F6 | | F7 | | F8 | | G6 | | G7 | | H6 | | H7 | |
|---|---|---|---|---|---|---|---|---|---|---|---|---|---|---|---|---|---|---|---|---|---|---|---|
| Over | Incl. | High | Low | High | Low | High | Low | High | Low | High | Low | High | Low | High | Low | High | Low | High | Low | High | Low | High | Low |
| 3 | 6 | +32 | +20 | +68 | +20 | +95 | +20 | +140 | +20 | +18 | +10 | +22 | +10 | +28 | +10 | +12 | +4 | +16 | +4 | +8 | 0 | +12 | 0 |
| 6 | 10 | +40 | +25 | +83 | +25 | +115 | +25 | +175 | +25 | +22 | +13 | +28 | +13 | +35 | +13 | +14 | +5 | +20 | +5 | +9 | 0 | +15 | 0 |
| 10 | 18 | +50 | +32 | +102 | +32 | +142 | +32 | +212 | +32 | +27 | +16 | +34 | +16 | +43 | +16 | +17 | +6 | +24 | +6 | +11 | 0 | +18 | 0 |
| 18 | 30 | +61 | +40 | +124 | +40 | +170 | +40 | +250 | +40 | +33 | +20 | +41 | +20 | +53 | +20 | +20 | +7 | +28 | +7 | +13 | 0 | +21 | 0 |
| 30 | 40 | +75 | +50 | +150 | +50 | +210 | +50 | +300 | +50 | +41 | +25 | +50 | +25 | +64 | +25 | +25 | +9 | +34 | +9 | +16 | 0 | +25 | 0 |
| 40 | 50 | | | | | | | | | | | | | | | | | | | | | | |
| 50 | 65 | +90 | +60 | +180 | +60 | +250 | +60 | +360 | +60 | +49 | +30 | +60 | +30 | +76 | +30 | +29 | +10 | +40 | +10 | +19 | 0 | +30 | 0 |
| 65 | 80 | | | | | | | | | | | | | | | | | | | | | | |
| 80 | 100 | +107 | +72 | +212 | +72 | +292 | +72 | +422 | +72 | +58 | +36 | +71 | +36 | +90 | +36 | +34 | +12 | +47 | +12 | +22 | 0 | +35 | 0 |
| 100 | 120 | | | | | | | | | | | | | | | | | | | | | | |
| 120 | 140 | +125 | +85 | +245 | +85 | +335 | +85 | +485 | +85 | +68 | +43 | +83 | +43 | +106 | +43 | +39 | +14 | +54 | +14 | +25 | 0 | +40 | 0 |
| 140 | 160 | | | | | | | | | | | | | | | | | | | | | | |
| 160 | 180 | | | | | | | | | | | | | | | | | | | | | | |
| 180 | 200 | +146 | +100 | +285 | +100 | +390 | +100 | +560 | +100 | +79 | +50 | +96 | +50 | +122 | +50 | +44 | +15 | +61 | +15 | +29 | 0 | +46 | 0 |
| 200 | 225 | | | | | | | | | | | | | | | | | | | | | | |
| 225 | 250 | | | | | | | | | | | | | | | | | | | | | | |
| 250 | 280 | +146 | +110 | +320 | +110 | +430 | +110 | +630 | +110 | +88 | +56 | +108 | +56 | +137 | +56 | +49 | +17 | +69 | +17 | +32 | 0 | +52 | 0 |
| 280 | 315 | | | | | | | | | | | | | | | | | | | | | | |
| 315 | 355 | +182 | +125 | +355 | +125 | +485 | +125 | +695 | +125 | +98 | +62 | +119 | +62 | +151 | +62 | +54 | +18 | +75 | +18 | +36 | 0 | +57 | 0 |
| 355 | 400 | | | | | | | | | | | | | | | | | | | | | | |
| 400 | 450 | +198 | +135 | +385 | +135 | +535 | +135 | +765 | +135 | +108 | +68 | +131 | +68 | +165 | +68 | +60 | +20 | +83 | +20 | +40 | 0 | +63 | 0 |
| 450 | 500 | | | | | | | | | | | | | | | | | | | | | | |
| 500 | 560 | +215 | +145 | — | — | — | — | — | — | +120 | +76 | +146 | +76 | +186 | +76 | +66 | +22 | +92 | +22 | +44 | 0 | +70 | 0 |
| 560 | 630 | | | | | | | | | | | | | | | | | | | | | | |
| 630 | 710 | +240 | +160 | — | — | — | — | — | — | +130 | +80 | +160 | +80 | +205 | +80 | +74 | +24 | +104 | +24 | +50 | 0 | +80 | 0 |
| 710 | 800 | | | | | | | | | | | | | | | | | | | | | | |
| 800 | 900 | +260 | +170 | — | — | — | — | — | — | +142 | +86 | +176 | +86 | +226 | +86 | +82 | +26 | +116 | +26 | +56 | 0 | +90 | 0 |
| 900 | 1000 | | | | | | | | | | | | | | | | | | | | | | |
| 1000 | 1120 | +300 | +195 | — | — | — | — | — | — | +164 | +98 | +203 | +98 | +263 | +98 | +94 | +28 | +133 | +28 | +66 | 0 | +105 | 0 |
| 1120 | 1250 | | | | | | | | | | | | | | | | | | | | | | |
| 1250 | 1400 | +345 | +220 | — | — | — | — | — | — | +188 | +110 | +235 | +110 | +305 | +110 | +108 | +30 | +155 | +30 | +78 | 0 | +125 | 0 |
| 1400 | 1600 | | | | | | | | | | | | | | | | | | | | | | |
| 1600 | 1800 | +390 | +240 | — | — | — | — | — | — | +212 | +120 | +270 | +120 | +350 | +120 | +124 | +32 | +182 | +32 | +92 | 0 | +150 | 0 |
| 1800 | 2000 | | | | | | | | | | | | | | | | | | | | | | |

| Dimension (mm) | | H8 | | H9 | | H10 | | H11 | | H13 | | J6 | | Js6 | | J7 | | Js7 | | K5 | | Dimension (mm) | |
|---|---|---|---|---|---|---|---|---|---|---|---|---|---|---|---|---|---|---|---|---|---|---|---|
| Over | Incl. | High | Low | High | Low | High | Low | High | Low | High | Low | High | Low | High | Low | High | Low | High | Low | High | Low | Over | Incl. |
| 3 | 6 | +18 | 0 | +30 | 0 | +48 | 0 | +75 | 0 | +180 | 0 | +5 | −3 | +4 | −4 | +6 | −6 | +6 | −6 | 0 | −5 | 3 | 6 |
| 6 | 10 | +22 | 0 | +36 | 0 | +58 | 0 | +90 | 0 | +220 | 0 | +5 | −4 | +4.5 | −4.5 | +8 | −7 | +7.5 | −7.5 | +1 | −5 | 6 | 10 |
| 10 | 18 | +27 | 0 | +43 | 0 | +70 | 0 | +110 | 0 | +270 | 0 | +6 | −5 | +5.5 | −5.5 | +10 | −8 | +9 | −9 | +2 | −6 | 10 | 18 |
| 18 | 30 | +33 | 0 | +52 | 0 | +84 | 0 | +130 | 0 | +330 | 0 | +8 | −5 | +6.5 | −6.5 | +12 | −9 | +10.5 | −10.5 | +1 | −8 | 18 | 30 |
| 30 | 40 | +39 | 0 | +62 | 0 | +100 | 0 | +160 | 0 | +390 | 0 | +10 | −6 | +8 | −8 | +14 | −11 | +12.5 | −12.5 | +2 | −9 | 30 | 40 |
| 40 | 50 | | | | | | | | | | | | | | | | | | | | | 40 | 50 |
| 50 | 65 | +46 | 0 | +74 | 0 | +120 | 0 | +190 | 0 | +460 | 0 | +13 | −6 | +9.5 | −9.5 | +18 | −12 | +15 | −15 | +3 | −10 | 50 | 65 |
| 65 | 80 | | | | | | | | | | | | | | | | | | | | | 65 | 80 |
| 80 | 100 | +54 | 0 | +87 | 0 | +140 | 0 | +220 | 0 | +540 | 0 | +16 | −6 | +11 | −11 | +22 | −13 | +17.5 | −17.5 | +2 | −13 | 80 | 100 |
| 100 | 120 | | | | | | | | | | | | | | | | | | | | | 100 | 120 |
| 120 | 140 | +63 | 0 | +100 | 0 | +160 | 0 | +250 | 0 | +630 | 0 | +18 | −7 | +12.5 | −12.5 | +26 | −14 | +20 | −20 | +3 | −15 | 120 | 140 |
| 140 | 160 | | | | | | | | | | | | | | | | | | | | | 140 | 160 |
| 160 | 180 | | | | | | | | | | | | | | | | | | | | | 160 | 180 |
| 180 | 200 | +72 | 0 | +115 | 0 | +185 | 0 | +290 | 0 | +720 | 0 | +22 | −7 | +14.5 | −14.5 | +30 | −16 | +23 | −23 | +2 | −18 | 180 | 200 |
| 200 | 225 | | | | | | | | | | | | | | | | | | | | | 200 | 225 |
| 225 | 250 | | | | | | | | | | | | | | | | | | | | | 225 | 250 |
| 250 | 280 | +81 | 0 | +130 | 0 | +210 | 0 | +320 | 0 | +810 | 0 | +25 | −7 | +16 | −16 | +36 | −16 | +26 | −26 | +3 | −20 | 250 | 280 |
| 280 | 315 | | | | | | | | | | | | | | | | | | | | | 280 | 315 |
| 315 | 355 | +89 | 0 | +140 | 0 | +230 | 0 | +360 | 0 | +890 | 0 | +29 | −7 | +18 | −18 | +39 | −18 | +28.5 | −28.5 | +3 | −22 | 315 | 355 |
| 355 | 400 | | | | | | | | | | | | | | | | | | | | | 355 | 400 |
| 400 | 450 | +97 | 0 | +155 | 0 | +250 | 0 | +400 | 0 | +970 | 0 | +33 | −7 | +20 | −20 | +43 | −20 | +31.5 | −31.5 | +2 | −25 | 400 | 450 |
| 450 | 500 | | | | | | | | | | | | | | | | | | | | | 450 | 500 |
| 500 | 560 | +110 | 0 | +175 | 0 | +280 | 0 | +440 | 0 | — | | — | — | +22 | −22 | — | — | +35 | −35 | — | — | 500 | 560 |
| 560 | 630 | | | | | | | | | | | | | | | | | | | | | 560 | 630 |
| 630 | 710 | +125 | 0 | +200 | 0 | +320 | 0 | +500 | 0 | — | | — | — | +25 | −25 | — | — | +40 | −40 | — | — | 630 | 710 |
| 710 | 800 | | | | | | | | | | | | | | | | | | | | | 710 | 800 |
| 800 | 900 | +140 | 0 | +230 | 0 | +360 | 0 | +560 | 0 | — | | — | — | +28 | −28 | — | — | +45 | −45 | — | — | 800 | 900 |
| 900 | 1000 | | | | | | | | | | | | | | | | | | | | | 900 | 1000 |
| 1000 | 1120 | +165 | 0 | +260 | 0 | +420 | 0 | +660 | 0 | — | | — | — | +33 | −33 | — | — | +52.5 | −52.5 | — | — | 1000 | 1120 |
| 1120 | 1250 | | | | | | | | | | | | | | | | | | | | | 1120 | 1250 |
| 1250 | 1400 | +195 | 0 | +310 | 0 | +500 | 0 | +780 | 0 | — | | — | — | +39 | −39 | — | — | +62.5 | −62.5 | — | — | 1250 | 1400 |
| 1400 | 1600 | | | | | | | | | | | | | | | | | | | | | 1400 | 1600 |
| 1600 | 1800 | +230 | 0 | +370 | 0 | +600 | 0 | +920 | 0 | — | | — | — | +46 | −46 | — | — | +75 | −75 | — | — | 1600 | 1800 |
| 1800 | 2000 | | | | | | | | | | | | | | | | | | | | | 1800 | 2000 |

Unit: μm

| Dimension (mm) | | K6 | | K7 | | M6 | | M7 | | N6 | | N7 | | P6 | | P7 | | R6 | | R7 | |
|---|---|---|---|---|---|---|---|---|---|---|---|---|---|---|---|---|---|---|---|---|---|
| Over | Incl. | High | Low | High | Low | High | Low | High | Low | High | Low | High | Low | High | Low | High | Low | High | Low | High | Low |
| 3 | 6 | +2 | −6 | +3 | −9 | −1 | −9 | 0 | −12 | −5 | −13 | −4 | −16 | −9 | −17 | −8 | −20 | −12 | −20 | −11 | −23 |
| 6 | 10 | +2 | −7 | +5 | −10 | −3 | −12 | 0 | −15 | −7 | −16 | −4 | −19 | −12 | −21 | −9 | −24 | −16 | −25 | −13 | −28 |
| 10 | 18 | +2 | −9 | +6 | −12 | −4 | −15 | 0 | −18 | −9 | −20 | −5 | −23 | −15 | −26 | −11 | −29 | −20 | −31 | −16 | −34 |
| 18 | 30 | +2 | −11 | +6 | −15 | −4 | −17 | 0 | −21 | −11 | −24 | −7 | −28 | −18 | −31 | −14 | −35 | −24 | −37 | −20 | −41 |
| 30 | 40 | +3 | −13 | +7 | −18 | −4 | −20 | 0 | −25 | −12 | −28 | −8 | −33 | −21 | −37 | −17 | −42 | −29 | −45 | −25 | −50 |
| 40 | 50 | | | | | | | | | | | | | | | | | | | | |
| 50 | 65 | +4 | −15 | +9 | −21 | −5 | −24 | 0 | −30 | −14 | −33 | −9 | −39 | −26 | −45 | −21 | −51 | −35 | −54 | −30 | −60 |
| 65 | 80 | | | | | | | | | | | | | | | | | −37 | −56 | −32 | −62 |
| 80 | 100 | +4 | −18 | +10 | −25 | −6 | −28 | 0 | −35 | −16 | −38 | −10 | −45 | −30 | −52 | −24 | −59 | −44 | −66 | −38 | −73 |
| 100 | 120 | | | | | | | | | | | | | | | | | −47 | −69 | −41 | −76 |
| 120 | 140 | +4 | −21 | +12 | −28 | −8 | −33 | 0 | −40 | −20 | −45 | −12 | −52 | −36 | −61 | −28 | −68 | −56 | −81 | −48 | −88 |
| 140 | 160 | | | | | | | | | | | | | | | | | −58 | −83 | −50 | −90 |
| 160 | 180 | | | | | | | | | | | | | | | | | −61 | −86 | −53 | −93 |
| 180 | 200 | +5 | −24 | +13 | −33 | −8 | −37 | 0 | −46 | −22 | −51 | −14 | −60 | −41 | −70 | −33 | −79 | −68 | −97 | −60 | −106 |
| 200 | 225 | | | | | | | | | | | | | | | | | −71 | −100 | −63 | −109 |
| 225 | 250 | | | | | | | | | | | | | | | | | −75 | −104 | −67 | −113 |
| 250 | 280 | +5 | −27 | +16 | −36 | −9 | −41 | 0 | −52 | −25 | −57 | −14 | −66 | −47 | −79 | −36 | −88 | −85 | −117 | −74 | −126 |
| 280 | 315 | | | | | | | | | | | | | | | | | −89 | −121 | −78 | −130 |
| 315 | 355 | +7 | −29 | +17 | −40 | −10 | −46 | 0 | −57 | −26 | −62 | −16 | −73 | −51 | −87 | −41 | −98 | −97 | −133 | −87 | −144 |
| 355 | 400 | | | | | | | | | | | | | | | | | −103 | −139 | −93 | −150 |
| 400 | 450 | +8 | −32 | +18 | −45 | −10 | −50 | 0 | −63 | −27 | −67 | −17 | −80 | −55 | −95 | −45 | −108 | −113 | −153 | −103 | −166 |
| 450 | 500 | | | | | | | | | | | | | | | | | −119 | −159 | −109 | −172 |
| 500 | 560 | 0 | −44 | 0 | −70 | −26 | −70 | −26 | −96 | −44 | −88 | −44 | −114 | −78 | −122 | −78 | −148 | −150 | −194 | −150 | −220 |
| 560 | 630 | | | | | | | | | | | | | | | | | −155 | −199 | −155 | −225 |
| 630 | 710 | 0 | −50 | 0 | −80 | −30 | −80 | −30 | −110 | −50 | −100 | −50 | −130 | −88 | −138 | −88 | −168 | −175 | −225 | −175 | −255 |
| 710 | 800 | | | | | | | | | | | | | | | | | −185 | −235 | −185 | −265 |
| 800 | 900 | 0 | −56 | 0 | −90 | −34 | −90 | −34 | −124 | −56 | −112 | −56 | −146 | −100 | −156 | −100 | −190 | −210 | −266 | −210 | −300 |
| 900 | 1000 | | | | | | | | | | | | | | | | | −220 | −276 | −220 | −310 |
| 1000 | 1120 | 0 | −66 | 0 | −105 | −40 | −106 | −40 | −145 | −66 | −132 | −66 | −171 | −120 | −186 | −120 | −225 | −250 | −316 | −250 | −355 |
| 1120 | 1250 | | | | | | | | | | | | | | | | | −260 | −326 | −260 | −365 |
| 1250 | 1400 | 0 | −78 | 0 | −125 | −48 | −126 | −48 | −173 | −78 | −156 | −78 | −203 | −140 | −218 | −140 | −265 | −300 | −378 | −300 | −425 |
| 1400 | 1600 | | | | | | | | | | | | | | | | | −330 | −408 | −330 | −455 |
| 1600 | 1800 | 0 | −92 | 0 | −150 | −58 | −150 | −58 | −208 | −92 | −184 | −92 | −242 | −170 | −262 | −170 | −320 | −370 | −462 | −370 | −520 |
| 1800 | 2000 | | | | | | | | | | | | | | | | | −400 | −492 | −400 | −550 |

# Table 8. International Units SI Conversion Table

| Category | Name of unit | Symbol | Conversion to SI | SI name of unit | SI abbreviation |
|---|---|---|---|---|---|
| **Angle** | Degree<br>Minute<br>Second | °<br>'<br>" | $\pi/180$<br>$\pi/10800$<br>$\pi/648000$ | Radian | **rad** |
| **Length** | Meter<br>Micron<br>Angstrom<br>Nautical mile | **m**<br>**μ**<br>**Å**<br>**mile** | 1<br>$10^{-6}$<br>$10^{-10}$<br>1852 | Meter | **m** |
| **Area** | Square meter<br>Radius<br>Hectare | **$m^2$**<br>**a**<br>**ha** | 1<br>$10^2$<br>$10^4$ | Square meter | **$m^2$** |
| **Volume** | Cubic meter<br>Liter | **$m^3$**<br>**ℓ** | 1<br>$10^{-3}$ | Cubic meter | **$m^3$** |
| **Mass** | Kilogram<br>Ton<br>Atomic mass unit | **kg**<br>**t**<br>**u** | 1<br>$10^3$<br>$\fallingdotseq 1.66057\times10^{-27}$ | Kilogram | **kg** |
| **Time** | Second<br>Minute<br>Hour<br>Day | **s**<br>**min**<br>**h**<br>**d** | 1<br>60<br>3600<br>86400 | Second | **s** |
| **Speed** | Meter per second<br>Knot | **m/s**<br>**kn** | 1<br>1852/3600 | Meter per second | **m/s** |
| **Frequency and oscillation** | Cycle | **$s^{-1}$** | 1 | Hertz | **Hz** |
| **Speed of rotation** | revolution per minute | **$min^{-1}$** | 1/60 | per second | **$s^{-1}$** |
| **Angular speed** | Radial per second | **rad/s** | 1 | Radian per second | **rad/s** |
| **Acceleration** | Meters per second squared<br>Gravity | **$m/s^2$**<br>**G** | 1<br>9.80665 | Meters per second squared | **$m/s^2$** |
| **Force** | Kilogram force<br>Ton force<br>Dyne | **kgf**<br>**tf**<br>**dyn** | 9.80665<br>9806.65<br>$10^{-5}$ | Newton | **N** |
| **Moment of force** | Kilogram force meter | **kgf·m** | 9.80665 | Newton meter | **N·m** |
| **Stress and pressure** | Kilogram force per meter squared<br>Kilogram force per centimeter squared<br>Kilogram force millimeter squared | **$kgf/m^2$**<br>**$kgf/cm^2$**<br>**$kgf/mm^2$** | 9.80665<br>$9.80665\times10^4$<br>$9.80665\times10^6$ | Pascal | **Pa** |





| Category | Name of unit | Symbol | Conversion to SI | SI name of unit | SI abbreviation |
|---|---|---|---|---|---|
| **Pressure** | Meter of water<br>Millimeter of mercury<br>Torr<br>Atmosphere<br>Bar | **$mH_2O$**<br>**mmHg**<br>**Torr**<br>**atm**<br>**bar** | 9806.65<br>101325/760<br>101325/760<br>101325<br>$10^5$ | Pascal | **Pa** |
| **Energy** | Erg<br>I. T. Calorie<br>Kilogram force meter<br>Kilowatt hour<br>Metric horsepower hour<br>Electron volt | **erg**<br>**$cal_{IT}$**<br>**kgf·m**<br>**kw·h**<br>**PS·h**<br>**eV** | $10^{-7}$<br>4.1868<br>9.80665<br>$3.600\times10^6$<br>$\fallingdotseq 2.64779\times10^6$<br>$\fallingdotseq 1.60219\times10^{-19}$ | Joule | **J** |
| **Power and dynamic force** | Watt<br>Horsepower<br>Kilogram force meter per second | **W**<br>**PS**<br>**kgf·m/s** | 1<br>$\fallingdotseq 735.5$<br>9.80665 | Watt | **W** |
| **Viscosity** | Poise<br>Centipoise<br>Kilogram force per square meter | **P**<br>**cP**<br>**$kgf\cdot s/m^2$** | $10^{-1}$<br>$10^{-3}$<br>9.80665 | Pascal second | **Pa·s** |
| **Kinematic viscosity** | Stoke<br>Centistoke | **St**<br>**cSt** | $10^{-4}$<br>$10^{-6}$ | Square meter per second | **$m^2/s$** |

# Table 9. SI Prefixes

| Factor | Prefix | |
|---|---|---|
| | Name | Symbol |
| **$10^{18}$** | Exa | E |
| **$10^{15}$** | Peta | P |
| **$10^{12}$** | Tera | T |
| **$10^9$** | Giga | G |
| **$10^6$** | Mega | M |
| **$10^3$** | Kilo | k |
| **$10^2$** | Hecto | h |
| **10** | Deca | da |

| Factor | Prefix | |
|---|---|---|
| | Name | Symbol |
| **$10^{-1}$** | Deci | d |
| **$10^{-2}$** | Centi | c |
| **$10^{-3}$** | Milli | m |
| **$10^{-6}$** | Micro | μ |
| **$10^{-9}$** | Nano | n |
| **$10^{-12}$** | Pico | p |
| **$10^{-15}$** | Femto | f |
| **$10^{-18}$** | Atto | a |

NACHI

# Table 10. Lubricating Greases

## Typical Lubricating Greases for Bearings

| Name of Grease | Grease Maker | Base Oil | Thickener | Penetration | Dropping point (°C) | | Operating temperature range (°C) | Color | Properties | | | | |
|---|---|---|---|---|---|---|---|---|---|---|---|---|---|
| | | | | | | | | | Water Resistance | High Speed Rotation | Noise | Grease Life at High Temp. | Torque at Low Temp. |
| Daphne Eponech No. 2 | Idemitsu Kosan | Hydrodesulfurized wax | Lithium | 280 | 197 | | –40～130 | Tan | ○ | | | | |
| Beacon 325 | Exxon Mobil | Diester Oil | Lithium | 280 | 193 | | –54～120 | Light Gray | ○ | ○ | | | ○ |
| Polyrex EM | Exxon Mobil | Mineral Oil | Polyurea | 285 | 300 | | –20～180 | Blue | ○ | ○ | | ○ | |
| Mobilgrease 28 | Exxon Mobil | Diester Oil+Mineral Oil+Synthetic Hydrocarbon | Microgel | 270 | 270 | | –62～177 | Red | ○ | | | ○ | |
| Mobilux 2 | Exxon Mobil | Mineral Oil | Lithium | 270 | 178 | | 0～125 | Brown | ○ | | | | |
| Temprex N3 | Exxon Mobil | Mineral Oil | Lithium Complex | 235 | 300 | | –30～150 | Green | ○ | ○ | | ○ | |
| Barrierta IMI | NOK Kluber | Flourine | PTFE | 280 | None | | –50～220 | White | ○ | ○ | | ○ | ○ |
| Isoflex NBU15 | NOK Kluber | Diester+Mineral Oil | Barium Complex | 280 | 250 | | –40～130 | Beige | ○ | ○ | | | |
| Isoflex NCA15 | NOK Kluber | Synthetic Ester Mineral Blend | Calcium Complex | 280 | 180 | | –50～120 | Beige | ○ | ○ | | | |
| Isoflex LDS18SA | NOK Kluber | Ester Oil | Lithium | 280 | 190 | | –60～130 | Yellow | ○ | ○ | | | ○ |
| NOXLUB BN2420P | NOK Kluber | PFPE Oil | Special Thickner | 280 | None | | –35～220 | White | | | | ○ | |
| NOXLUB BN4020 | NOK Kluber | PFPE Oil | Special Thickner | 280 | None | | –35～260 | White | | | | ○ | |
| Stabrags NBU 8 EP | NOK Kluber | Mineral Oil | Barium Complex | 280 | 220 | | –35～150 | Beige | | | | | ○ |
| Multemp LRL3 | Kyodo Yushi | Polyolester | Lithium | 235 | 208 | | –50～150 | Peach White | ○ | | ○ | ○ | ○ |
| Multemp PS2 | Kyodo Yushi | Diester Oil+Mineral Oil | Lithium | 275 | 190 | | –55～130 | White | ○ | ○ | | | |
| Multemp SRL | Kyodo Yushi | Tetraester | Lithium | 245 | 191 | | –40～150 | Light Yellow | ○ | | ○ | ○ | ○ |
| Alvania Grease 2S | Shell | Mineral Oil | Lithium | 276 | 185 | | –25～120 | Tan | ○ | | ○ | | |
| Alvania Grease 3S | Shell | Mineral Oil | Lithium | 240 | 185 | | –20～135 | Tan | ○ | | ○ | ○ | |
| AeroShell Grease 7 | Shell | Diester Oil | Microgel | 285 | 268 | | –73～150 | Light Brown | ○ | ○ | | ○ | ○ |
| Alvania EP Grease 2 | Shell | Mineral Oil | Lithium | 285 | 185 | | –15～110 | Reddish Brown | ○ | | | | |
| Retinax LX No.2 | Shell | Mineral Oil | Lithium Complex | 270 | 250 | | –15～150 | Light Brown | ○ | | | ○ | ○ |
| SH44M（DC44M） | Dow Corning Toray | Silicone Oil | Lithium | 260 | 210 | | –40～180 | Brown | ○ | | | ○ | ○ |
| NIGACE WR-S | Nippon Grease | Synthetic Oil | Urea | 240 | 290 | | –30～150 | Light Yellow | ○ | | | ○ | |

Remarks: 1. When the grease is used at temperature near the high or low end of the recommended operating temperature, please contact NACHI.
2. Generally Ester oil may give damage to polyacrylic rubber or ABS resin. Please be careful, when you use grease with Ester base oil.
3. Do not mix different type of greases.
4. If sodium thickener grease is mixed with water, the grease become soft and may leak.

# NACHI-FUJIKOSHI CORP.

http://www.nachi.com

**Tokyo Head Office**
Shiodome Sumitomo Bldg. 17F 1-9-2 Higashi-shinbashi, Minato-ku, Tokyo 105-0021, JAPAN
Tel: +81-(0)3-5568-5247 Fax: +81-(0)3-5568-5237

**Toyama Head Office**
1-1-1 Fujikoshi-Honmachi, Toyama 930-8511, JAPAN TEL: +81-(0)76-423-5111 Fax: +81-(0)76-493-5211

## AMERICA

### Sales

**● NACHI AMERICA INC.HEADQUARTERS**
715 Pushville Road, Greenwood, Indiana, 46143, U.S.A.
Tel: +1-317-530-1002 Fax: +1-317-530-1012
URL: http://www.nachiamerica.com/

**WEST COAST BRANCH**
12652 E. Alondra Blvd. Cerritos, California, 90703, U.S.A.
Tel: +1-562-802-0055 Fax: +1-562-802-2455

**MIAMI BRANCH - LATIN AMERICA DIV.**
2315 N.W. 107th Ave., Doral, Florida, 33172, U.S.A.
Tel: +1-305-591-0054/0059/2604 Fax: +1-305-591-3110

**● NACHI ROBOTIC SYSTEMS INC.**
42775 West 9 Mile Road Novi, Michigan, 48375, U.S.A.
Tel: +1-248-305-6545 Fax: +1-248-305-6542
URL: http://www.nachirobotics.com/

**● NACHI CANADA INC.**
89 Courtland Ave., Unit No.2, Concord, Ontario, L4K 3T4, CANADA
Tel: +1-905-660-0088 Fax: +1-905-660-1146
URL:http://www.nachicanada.com/

**● NACHI MEXICANA, S.A. DE C.V.**
Urbina No 54, Parque Industrial Naucalpan Naucalpan de Juarez, Estado de Mexico C.P. 53489, MEXICO
Tel: +52-55-3604-0832 / 0842 / 0881 Fax: +52-55-3604-0882

**NACHI MEXICANA ENGINEERING CENTER**
1171A,Calle Julio Diaz Torre, Fracc. Ciudad Industrial, Aguascalientes, C.P. 20290, MEXICO
Tel & Fax: +52-449-971-1689

### Manufacturing

**● NACHI TECHNOLOGY INC.**
713 Pushville Road, Greenwood, Indiana, 46143, U.S.A.
Tel: +1-317-535-5000 Fax: +1-317-535-8484
URL: http://nachitech.com/

**● NACHI TOOL AMERICA INC.**
717 Pushville Road, Greenwood, Indiana, 46143, U.S.A.
Tel: +1-317-535-0320 Fax: +1-317-535-0983

**● NACHI BRASIL LTDA.**
Avenida João XXIII, No.2330, Jardim São Pedro, Mogi das Cruzes, S.P., BRAZIL, CEP 08830-000
Tel: +55-11-4793-8800 Fax: +55-11-4793-8870
URL: http://www.nachi.com.br/

**SAO PAULO BRANCH**
Av. Paulista, 453, Primeiro Andar, Conj. 11, 12, 13 e 14, Cerqueira Cesar, Sao Paulo - SP, CEP:01311-000, BRASIL
Tel: +55-11-3284-9844 Fax: +55-11-3284-1751

## EUROPE

### Sales

**● NACHI EUROPE GmbH**
Bischofstrasse 99, 47809, Krefeld, GERMANY
Tel: +49-(0)2151-65046-0 Fax: +49-(0)2151-65046-90
URL: http://www.nachi.de/

**SOUTH GERMANY OFFICE**
Pleidelsheimer Strasse47, 74321, Bietigheim-Bissingen, GERMANY
Tel: +49-(0)7142-77418-0 Fax: +49-(0)7142-77418-20

**SPAIN BRANCH**
P.I. EL MONTALVO Ⅲ C/Segunda, 6. Portal 1-2ª, Oficina 5 37188-Carbajosa de La Sagrada Salamanca- España
Tel: +34-(0)923-197-837 Fax: +34-(0)923-197-758

**CZECH BRANCH**
Obchodni 132 251 01 Cestlice CZECH
Tel: +420-(0)255-734-000 Fax: +420-(0)255-734-001

**U.K. BRANCH**
Unit 3, 92, Kettles Wood Drive Woodgate Business Park, BIRMINGHAM B32 3DB, U.K.
Tel: +44-(0)121-423-5000 Fax: +44-(0)121-421-7520

**TURKEY OFFICE**
Karaman Ciftligi Mevkii, Agaoglu My Prestige, K;13, D;110, 34746, Atasehir, Istanbul, TURKEY
Tel: +90-(0)216-688-4457 Fax: +90-(0)216-688-4458

### Manufacturing

**● NACHI CZECH s.r.o**
Prumyslova 2732, 440 01 Louny, CZECH
Tel: +420-415-930-930 Fax: +420-415-930-940

## ASIA and OCEANIA

### Sales

**● NACHI SINGAPORE PTE. LTD.**
No.2 Joo Koon Way, Jurong Town, Singapore 628943, SINGAPORE
Tel: +65-65587393 Fax: +65-65587371

**VIETNAM REPRESENTATIVE OFFICE, HO CHI MINH**
4Fl., Yoco Bld., 41 Nguyen Thi Minh Khai St., Dist.1, Ho Chi Minh, VIETNAM
Tel: +84-8-3822-3919 Fax: +84-8-3822-3918

**VIETNAM REPRESENTATIVE OFFICE, HANOI**
5B Fl., Noza Bld., 243 Cau Giay St., Cau Giay Dist., Hanoi, VIETNAM
Tel: +84-4-3767-8605 Fax: +84-4-3767-8604

**● FUJIKOSHI-NACHI (MALAYSIA) SDN. BHD.**
No.17, Jalan USJ 21/3, 47630 UEP Subang Jaya, Selangor Darul Ehsan, MALAYSIA
Tel: +60-(0)3-80247900 Fax: +60-(0)3-80235884

**● PT.NACHI INDONESIA**
TEMPO PAVILION I, 7FL
JL. HR Rasuna Said Kav. 10-11
Setiabudi Jakarta Selatan DKI Jakarta -12950, INDONESIA
Tel: +62-012-527-2841 Fax: +62-021-527-3029

**● NACHI KG TECHNOLOGY INDIA PVT. GURGAON HEAD OFFICE**
Unit No.207, 2nd Floor, Sewa Corporate Park, MG Road, Iffco Chowk, Gurgaon 122001, Haryana, INDIA
Tel: +91-(0)12-4450-2900 Fax: +91-(0)12-4450-9210

**BANGALORE OFFICE**
F-11 Asha Chamber, No2,Venkata Swami Raju Road, Kumara Park West, Bangaore-560020, INDIA
Tel: +91-(0)80-3920-8701 Fax: +91-(0)80-3920-8700

**● 那智不二越（上海）贸易有限公司 NACHI (SHANGHAI) CO.,LTD.**
11F Royal Wealth Center, No.7 Lane 98 Danba Road, Putuo District, Shanghai, 200062, CHINA
Tel: +86-(0)21-6915-2200 Fax: +86-(0)21-6915-5427
URL:http://www.nachi-china.com.cn/

**重庆分公司 CHONGQING BRANCH**
C17-18/19 Hogding International Building, Jiangbei District, Chongqing 400020, CHINA
Tel: +86-(0)23-8816-1967 Fax: +86-(0)23-8816-1968

**沈阳分公司 SHENYANG BRANCH**
Room304, No.1 Yuebin Street, Shenhe District, Shenyang 110000, CHINA
Tel: +86-(0)24-3120-2252 Fax: +86-(0)24-2250-5316

**北京分公司 BEIJING BRANCH**
Room 903A, Kuntai International Mansion, Building J, Yi No.12 Chao Wai Street, Chao yang District, Beijing 100020, CHINA
Tel: +86-(0)10-5879-0181 Fax: +86-(0)10-5879-0182

**广州分公司 GUANGZHOU BRANCH**
101, Buliding1, Science & Technology Park, NO.1 Kehui, kexue load, Luogang District, Guangzhou 510670, CHINA

**● NACHI-FUJIKOSHI CORP. TAIPEI REPRESENTATIVE OFFICE**
No.109, Kao Young North Rd, Lung-Tan Hsin, Tao-Yuan Hsien, TAIWAN
Tel: +886-(0)3-411-7776 Fax: +886-(0)3-471-8402

**● NACHI-FUJIKOSHI CORP. KOREA REPRESENTATIVE OFFICE**
3F A-Youn Digital Tower 314-37, Seongsu-dong 2-ga, Seongdong-gu, Seoul 133-120, KOREA
Tel: +82-(0)2-469-2254 Fax: +82-(0)2-469-2264

**● NACHI (AUSTRALIA) PTY. LTD.**
Unit 1, 23-29 South Street, Rydalmere, N.S.W, 2116, AUSTRALIA
Tel: +61-(0)2-9898-1511 Fax: +61-(0)2-9898-1678
URL: http://www.nachi.com.au/

### Manufacturing

**● NACHI TECHNOLOGY (THAILAND) CO., LTD.**
5/5 M, 2, Rojana Industrial Estate Nongbua, Ban Khai, Rayong, 21120, THAILAND
Tel: +66-38-961-682 Fax: +66-38-961-683

**BANGKOK SALES OFFICE**
Unit 23/109(A), Fl.24th Sorachai Bldg., Sukhumvit 63 Road(Ekamai), Klongtonnua, Wattana, Bangkok 10110, THAILAND
Tel: +66-2-714-0008 Fax: +66-2-714-0740

**● NACHI INDUSTRIES PTE. LTD.**
No.2 Joo Koon Way, Jurong Town, Singapore 628943, SINGAPORE
Tel: +65-68613944 Fax: +65-68611153
URL: http://www.nachinip.com.sg/

**● NACHI PILIPINAS INDUSTRIES, INC.**
1st Avenue, Manalac Compound, Sta. Maria Industrial Estate, Bagumbayan, Taguig, Metro Manila, PHILIPPINES
Tel: +63-(0)2-838-3620 Fax: +63-(0)2-838-3623

**● NACHI KG TECHNOLOGY INDIA PVT. NEEMRANA PLANT**
Plot No. SP-86, RIICO Industrial Area, Neemrana 301705, Distt. Alwar, Rajasthan, INDIA
Tel: +91-(0)14-9467-1300 Fax: +91-(0)14-9467-1310

**● NACHI MOTHERSON PRECISION LTD.**
179, Sector4, IMT Manesar, District Gurgaon-122 050, Haryana, INDIA
Tel: +91-124-4936-000 Fax: +91-124-4936-022

**● NACHI MOTHERSON TOOL TECHNOLOGY LTD.**
D-59-60, Sector-6, Noida-201301, Distt. G.B. Nagar, U.P. INDIA
Tel: +91-120-425-8372 Fax: +91-120-425-8374

**● 那智不二越（江苏）精密机械有限公司 NACHI（JIANGSU）INDUSTRIES CO., LTD.**
39 Nanyuan Road, Economic and Technological Development Zone (south), Zhangjiagang, Jiangsu 215618, CHINA
Tel: +86-(0)512-3500-7616 Fax: +86-(0)512-3500-7615

**● 东莞建越精密轴承有限公司 DONGGUAN NACHI C.Y. CORPORATION**
Dangyong Village, Hongmci Town Dongguan City, Guangdong, 523160, CHINA
Tel: +86-(0)769-8843-1300 Fax: +86-(0)769-8843-1330

**● 上海不二越精密轴承有限公司 SHANGHAI NACHI BEARINGS CO., LTD**
Yitong Industry Zone 258, Fengmao Rd. Malu Town, Jiading, Shanghai, 201801, CHINA
Tel: +86-(0)21-6915-6200 Fax: +86-(0)21-6915-6202

**● 耐锯（上海）精密刀具有限公司 SHANGHAI NACHI SAW CO., LTD.**
1F, 5 Building, 33 Forward Road, Malu Town, Jiading, Shanghai 201818, CHINA

**● 建越工業股份有限公司 NACHI C.Y. CORP.**
No.109, Kao Young North Rd, Lung-Tan Hsin, Tao-Yuan Hsien, TAIWAN
Tel: +886-(0)3-471-7651 Fax: +886-(0)3-471-8402

**● 대성나찌 유압공업（주） DAESUNG-NACHI HYDRAULICS CO., LTD.**
289-22, Yusan-Dong, Yangsan-Si, GyeongNam 626-230, KOREA
Tel: +82-(0)55-371-9700 Fax: +82-(0)55-384-3270

The appearance and specifications may be changed without prior notice if required to improve performance.
Every care has been taken to ensure the accuracy of the information contained in this catalog but no liability can be accepted for any errors or omissions.

ISO/TS16949 THE SCOOPE OF REGISTRATION :
THE DESIGN / DEVELOPMENT AND MANUFACTURE OF BALL AND ROLLER BEARINGS FOR AUTOMOBILE

**No. B2100E-4**
Printed in Japan 2014.04.V-ABE-ABE

NACHI

NACHI-FUJIKOSHI CORP.